FINAL

ENVIRONMENTAL CONDITION OF PROPERTY REPORT

WILKES-BARRE
U.S. ARMY RESERVE CENTER (PA099)
1001 HIGHWAY 315 SOUTH
WILKES-BARRE, PA 18701

Prepared For:

U.S. Army Corps of Engineers – Louisville District
Engineering Division – Environmental Engineering Branch
600 Dr. Martin Luther King, Jr. Place
Louisville, Kentucky 40202-2232

FEBRUARY 2007

Certification

All information/documentation provided accurately reflects the environmental condition of the property. This ECP report is in general accordance with the U.S. Department of Defense (DoD) requirements for completion of an Environmental Condition of Property (ECP) report.

BRUCE KISH **DATE**
Environmental Protection Specialist
99th Regional Readiness Command

The undersigned certifies the contents of this report are in general accordance with DoD policies for the completion of an ECP.

LENARD GUNNELL, P.G. **DATE**
Project Geologist
U.S. Army Corps of Engineers

Executive Summary

CH2M HILL, under contract to the U.S. Army Corps of Engineers, Louisville District, has prepared this Environmental Condition of Property (ECP) report for the Wilkes-Barre U.S. Army Reserve (USAR) Center (Facility ID PA099), hereafter referred to as the "Property" or "USAR Center." The Property is in Wilkes-Barre, Pennsylvania and encompasses approximately 4 acres.

This ECP report was conducted in conformance with the Department of Defense's (DoD's) Base Redevelopment and Realignment Manual, DoD 4165.77-M (BRRM), Army Regulation 200-1, and the American Society for Testing and Materials (ASTM) Designation D6008-96 (2005), *Standard Practice for Conducting Environmental Baseline Surveys*.

This ECP report details the history of the property, including the USAR and any prior tenant uses of the Property and the resulting environmental condition of the property.

The USAR Center is on approximately 4 acres of land with two permanent structures, a 21,503-square-foot administration building and a 3,905-square-foot Organizational Maintenance Shop (OMS) building. The site is currently occupied by three units: the 828th Quartermaster Company, 220th Military Police (MP) Detachment, and the 3rd/80th Battalion BDE Training Division.

Based on a review of aerial photographs and U.S. Geological Survey (USGS) topographic maps dating back to 1949, the Property was an undeveloped lot prior to 1949. The USGS topographic map from 1949 did not show any structures on the Property; however, the 1947-1969, 1947-1976, 1947-1980, and the 1999 USGS topographic maps showed the main administration building. The earliest aerial photograph available was 1969, which showed both buildings had been constructed.

Areas of potential environmental concern were reviewed, and CH2M HILL found the following findings relating to the USAR use of this Property.

The Property has an inactive vehicle wash rack that discharged directly to the stormwater system. While there was no closure documentation or information on drain pipe or soil conditions for the wash rack, there was no evidence of a release. Any releases that might have occurred from cracks in the wash rack would be expected to be de minimis quantities.

One 1,000-gallon underground storage tank (UST) containing No. 2 fuel oil was located at this Property and was removed in 1993. The closure report documents analytical results for subsurface soil samples collected from the UST excavation as well as visual observations of tank and piping conditions at the time of removal. The report stated there was no evidence of a release when the tank was removed and no detections of benzene, toluene, ethyl benzene, and xylene (BTEX) in soil samples; however, total petroleum hydrocarbons (TPH) were detected in soil samples. The report indicates the TPH detections could have been the result of naturally occurring concentrations due to the presence of coal in the area. The closure report states that because this UST was used to supply fuel oil for space heating, it is unregulated by the federal government and by the state of Pennsylvania.

In accordance with DoD policy defining the classifications (see Sherri Goodman Memorandum dated 21 October 1996), the Property has been classified as Type 1. This classification does not include categorizing the property based on de minimis conditions that generally do not present material risk of harm to the public health or the environment and that generally would not be the subject of an enforcement action if brought to the attention of appropriate governmental agencies.

Contents

Section **Page**

Executive Summary ..... **III**
Abbreviations and Acronyms ..... **ix**
1 Introduction **1-1**
1.1 Purpose of Environmental Condition of Property 1-1
2 Site Location and Physical Description **2-1**
2.1 Site Location 2-1
2.2 Asset Information 2-1
2.3 Physical Description 2-2
2.3.1 Main Administration Building 2-2
2.3.2 Organizational Maintenance Shop Building 2-3
2.3.3 Vehicle Wash Area 2-3
2.4 Site Hydrology and Geology 2-3
2.4.1 Surface Water Characteristics 2-4
2.4.2 Hydrogeological Characteristics 2-5
2.5 Site Utilities 2-5
2.6 Water Supply Wells and Septic Systems 2-5
3 Site History **3-1**
3.1 History of Ownership 3-1
3.2 Past Uses and Operations 3-1
3.3 Past Use, Storage, Disposal, and Release of Hazardous Substances 3-3
3.3.1 Past Use and Storage of Hazardous Substances 3-3
3.3.2 Past Disposal and Release of Hazardous Substances 3-3
3.4 Past Presence of Bulk Petroleum Storage Tanks 3-3
3.5 Review of Previous Environmental Reports 3-4
3.5.1 2002 Engineering and Environmental Facility Assessment 3-4
3.5.2 1993 UST Closure Report for Wilkes-Barre USARC 3-5
3.5.3 1995 Concept Design/Study Reserve Center Vehicle Wash Sites 3-5
3.5.4 1995 Cultural Resource Management Plan 3-5
3.5.5 1994 Final Report Lead Abatement 3-5
3.5.6 1997 Total Facility Assessment Report 3-5
4 Adjacent Properties **4-1**
4.1 Land Uses 4-1
4.2 Findings 4-2
5 Review of Regulatory Information **5-1**
5.1 Federal Environmental Records 5-1
5.1.1 Federal National Priorities List Sites within 1 Mile 5-1
5.1.2 Federal Comprehensive Environmental Response, Compensation and Liability Act Information Systems Sites within 0.5 Mile 5-1
5.1.3 Resource Conservation and Recovery Act Corrective Action Sites within 1 Mile 5-1
5.1.4 RCRA Transport, Treatment, and/or Disposal Sites within 0.5 Mile 5-2

5.1.5 Federal RCRA Small and Large Quantity Generators List within 0.25 Mile 5-2
5.1.6 Federal Emergency Response Notification System List 5-2
5.2 State and Local Environmental Records 5-2
5.2.1 State Lists of Hazardous Waste Sites within 1 Mile 5-2
5.2.2 State-Registered Landfills or Solid Waste Disposal Sites within 0.5 Mile 5-2
5.2.3 State-Registered Leaking UST Sites within 0.5 Mile 5-3
5.2.4 State-Registered UST Sites within 0.5 Mile 5-3
5.2.5 State Spills Incidents 5-3
5.2.6 Records of Contaminated Public Wells 5-3
5.2.7 Voluntary Remediation Program Sites within 0.5 Mile 5-3
5.2.8 State-Registered Bulk Fertilizer and Pesticide Storage Facilities within 0.25 Mile 5-3
5.3 Unmapped Sites 5-3
5.4 Summary of Properties Evaluated to Determine Risk to the Property 5-4
6 Site Investigation and Review of Hazards 6-1
6.1 USTs/ASTs 6-1
6.2 Inventory of Chemicals/Hazardous Substances 6-1
6.3 Waste Disposal Sites 6-2
6.4 Pits, Sumps, Drywells, and Catch Basins 6-2
6.5 Asbestos-containing Material 6-2
6.6 PCB-containing Equipment 6-2
6.7 Lead-based Paint 6-2
6.8 Radon 6-3
6.9 Munitions and Explosives of Concern 6-3
6.10 Radioactive Materials 6-4
7 Review of Special Resources 7-1
7.1 Land Use 7-1
7.2 Coastal Zone Management 7-1
7.3 Wetlands 7-1
7.4 100-year Floodplain 7-1
7.5 Natural Resources 7-1
7.6 Cultural Resources 7-1
7.7 Other Special Resources 7-2
8 Conclusions 8-1
8.1 Review of Findings 8-1
8.2 Environmental Condition of Property 8-2
9 References 9-1

Appendixes

A Figures
- 1 General Site Location Map
- 2 Site Layout Plan
- 3 1949 USGS 7.5-Minute Topographic Map, Pittston, Pennsylvania
- 4 1947-1969 USGS 7.5-Minute Topographic Map, Pittston, Pennsylvania
- 5 1947-1976 USGS 7.5-Minute Topographic Map, Pittston, Pennsylvania
- 6 1947-1980 USGS 7.5-Minute Topographic Map, Pittston, Pennsylvania
- 7 1999 USGS 7.5-Minute Topographic Map, Pittston, Pennsylvania
- 8 1969 Aerial Photograph
- 9 1976 Aerial Photograph
- 10 1999 Aerial Photograph

B Site Reconnaissance Photographs

C Property Acquisition Documents and Chain of Title Report

D Previous Environmental Site Assessment Reports

E Regulatory Database Search Report

Abbreviations and Acronyms

The following is a comprehensive list of abbreviations and acronyms that are used throughout this report.

µg/ft^2	micrograms per square foot
AR	Army Regulation
AST	aboveground storage tank
ASTM	American Society for Testing and Materials
BRAC	Base Realignment and Closure
BRRM	Base Redevelopment and Realignment Manual
BTEX	benzene, toluene, ethyl benzene, and xylene
CERCLA	Comprehensive Environmental Response, Compensation, and Liability Act
CERCLIS	Comprehensive Environmental Response, Compensation, and Liability Act Information System
CFR	Code of Federal Regulations
CONEX	Container Express
CORRACTS	Resource Conservation and Recovery Act corrective action site
DoD	Department of Defense
DRO	diesel range organics
E2FA	engineering and environmental facility assessment
ECP	environmental condition of property
EDR	Environmental Data Resources, Inc.
ERNS	Emergency Response Notification System
HEPA	high-efficiency particulate air
HVAC	heating, ventilation, and air conditioning
kg	kilogram
LAST	leaking aboveground storage tank
LBP	lead-based paint
LUST	leaking underground storage tank

MEC	munitions and explosives of concern
MEP	military equipment parking
mg/kg	milligrams per kilogram
NBC	nuclear, biological, and/or chemical
NPL	National Priorities List
NRHP	National Register of Historic Places
OMS	Organizational Maintenance Shop
OWS	oil/water separator
PADEP	Pennsylvania Department of Environmental Protection
PCB	polychlorinated biphenyl
pCi/L	picoCuries per liter
POL	petroleum, oil, and lubricant
POV	privately owned vehicle
ppm	parts per million
RCRA	Resource Conservation and Recovery Act
RCRIS	Resource Conservation and Recovery Act Information System
RRC	Regional Readiness Command
STATSGO	State Soil Geographic Database
TPH	total petroleum hydrocarbon
TSD	treatment, storage, or disposal
USACE	United States Army Corps of Engineers
USAR	United States Army Reserve
USEPA	United States Environmental Protection Agency
USFWS	United States Fish and Wildlife Service
USGS	United States Geological Survey
UST	underground storage tank

1 Introduction

CH2M HILL, under contract to the U.S. Army Corps of Engineers (USACE) Louisville District Engineering Division was authorized to conduct an Environmental Condition of Property (ECP) report for the Wilkes-Barre U.S. Army Reserve (USAR) Center (PA099). The facility is located at 1001 Highway 315 South, Wilkes-Barre, Luzerne County, Pennsylvania, and is hereafter referred to as the Property or USAR Center. CH2M HILL prepared this ECP report under Contract Number W912QR-04-D-0020, Task Order No. 0018, with the Louisville District USACE.

A visual non-intrusive reconnaissance of the Property was conducted on August 15, 2006, in support of the ECP. The reconnaissance purpose was to visually obtain information indicating the likelihood of recognized environmental conditions associated with the Property or adjacent properties.

In preparing this ECP report, CH2M HILL gathered information from available records and previous work from others, interviews with individuals purporting to be familiar with the Property, and observations from a site reconnaissance. The accuracy of the information obtained from these sources was not verified by CH2M HILL. As such, CH2M HILL will make no warranty, expressed or implied, relative to the accuracy, completeness, or reliability of the information used to create the records and reports prepared by others.

1.1 Purpose of Environmental Condition of Property

The Military Department with real property accountability shall assess, determine and document the environmental condition of all transferable property in an ECP report. This ECP report is based on readily available information. Pursuant to the Department of Defense's (DoD's) policy, set forth in the Base Redevelopment and Realignment Manual (DoD 4165.66-M, March 1, 2006) Section C8.3 (BRRM), the primary purposes of the ECP report include the following:

- Provide the Army with information it may use to make disposal decisions
- Provide the public with information relative to the environmental condition of the property
- Assist in community planning for the reuse of Base Realignment and Closure (BRAC) property
- Assist federal agencies during the property screening process
- Provide information for prospective buyers
- Assist prospective new owners in meeting the requirements under U.S. Environmental Protection Agency's (USEPA's) "All Appropriate Inquiry" regulations
- Provide information about completed remedial and corrective actions at the property

- Assist in determining appropriate responsibilities, asset valuation, and liabilities with other parties to a transaction

The ECP report contains the information required to comply with the provisions of 40 Code of Federal Regulations (CFR) Part 373, which require that a notice accompany contracts for the sale of, and deeds entered into, for the transfer of federal property on which any hazardous substance was stored, released, or disposed of. The Comprehensive Environmental Response, Compensation, and Liability Act (CERCLA), Section 120(h) stipulates that a notice is required if certain quantities of designated hazardous substances have been stored on the property for 1 year or more—specifically, quantities exceeding 1,000 kilograms (kg) or the reportable quantity, whichever is greater, of the substances specified in 40 CFR 302.4 or 1 kg of acutely hazardous waste as defined in 40 CFR 261.30. A notice also is required if hazardous substances have been disposed of or released on the property in an amount greater than or equal to the reportable quantity. Army Regulation (AR) 200-1 requires that the ECP report address asbestos, lead-based paint (LBP), radon, and other substances potentially hazardous to human health.

This ECP report used the American Society for Testing and materials (ASTM) Designation D6008-96 (2005), *Standard Practice for Conducting Environmental Baseline Surveys*, the BRRM, CERCLA §120, and AR 200-1.

Scope of Services

This ECP report covers the 4.0-acre USAR Center located at 1001 Highway 315 South, Wilkes-Barre, Pennsylvania. The Property is bounded by Highway 309/115 to the south, and commercial development to the east, west, and north. All site maps, figures, and aerial photographs referenced herein are provided in Appendix A, while Appendix B contains photographs taken during the August 15, 2006, site reconnaissance. Appendix C contains the Property warranty deeds and chain of title information, and lease or permit agreements if applicable. Relevant environmental documents and reports are provided in Appendix D, while Appendix E contains the Environmental Data Resources, Inc. (EDR) radius search reports commissioned for this effort.

This ECP report classifies the Property into one of seven DoD Environmental ECP categories as defined by the DoD policy defining the classifications (see Sherri Goodman memorandum dated 21 October 1996). The property classification categories are as follows:

- ECP Area Type 1—An area or parcel of real property where no release or disposal of hazardous substances or petroleum products or their derivatives has occurred (including no migration of these substances from adjacent properties).
- ECP Area Type 2—An area or parcel of real property where only the release or disposal of petroleum products or their derivatives has occurred.
- ECP Area Type 3—An area or parcel of real property where release, disposal, or migration, or some combination thereof, of hazardous substances has occurred, but at concentrations that do not require a removal or remedial action.
- ECP Area Type 4—An area or parcel of real property where release, disposal, or migration, or some combination thereof, of hazardous substances has occurred and all

remedial actions necessary to protect human health and the environment have been taken.

- ECP Area Type 5—An area or parcel of real property where release, disposal, or migration, or some combination thereof, of hazardous substances has occurred and removal or remedial actions, or both, are underway, but all required actions have not yet been taken.
- ECP Area Type 6—An area or parcel of real property where release, disposal, or migration, or some combination thereof, of hazardous substances has occurred, but required response actions have not yet been initiated.
- ECP Area Type 7—An area or parcel of real property that is unevaluated or requires additional evaluation.

2 Site Location and Physical Description

2.1 Site Location

The USAR Center is located in Luzerne County, on the central-eastern side of the city of Wilkes-Barre, Pennsylvania, at 1001 Highway 315 South. The 4.0-acre parcel is situated on a main thoroughfare (U.S. Highway 315) and is surrounded on other property boundaries by commercial development.

2.2 Asset Information

Facility Name and Address:	Wilkes-Barre U.S. Army Reserve Center 1001 Highway 315 South Wilkes-Barre, Pennsylvania
Property Owner:	U.S. Government
Date of Ownership:	1954; 1965
Current Occupant:	828th Quartermaster Company 220th Military Police (MP) Detachment 3rd/80th Battalion BDE Training Division
Zoning:	This information was not available at the time of the ECP report preparation
County, State:	Luzerne, Pennsylvania
USGS Quadrangle(s):	Pittston, Pennsylvania
Section/Township/Range:	This information was not available at the time of the ECP report preparation
Latitude/longitude:	41°15’5.4”N; 75°49’46.9”W

Legal Description:

Tract No. A-100 (1954), in the Township of Plains, Luzerne County, Commonwealth of Pennsylvania described and bounded as follows: Beginning at a point in the southerly right of way line of U.S. Highway No. 315 south 23º44’35” East 40 feet from the centerline of said highway at Centerline Station 344+96.34; thence South 23º44’35” East 244.08 feet to a point in the northerly right of way line of U.S. Highway No. 115; thence with said right of way line North 77º28’52” East 518.74 feet to a point; thence North 18º09’35” West 327.19 feet to a point in the right of way line of the above mentioned U.S. Highway No. 315; thence along said right of way line South 68º18’52” West 541.01 feet to the place of beginning. Containing 3.45 acres of land, more or less.

Tract No. A-103 (1965), in the Township of Plains, Luzerne County, Commonwealth of Pennsylvania described and bounded as follows: Beginning at a point on the northwest boundary line of Pennsylvania State Highway Route No. 315 (Legislative Route No. 515), said point being a common corner between lands of Clement W. Perkins and lands of Angeline Gurnari; thence from the point of beginning and binding the aforesaid Gurnari lands N 21°41′08″ W 150 feet to a point; thence leaving the aforesaid Gurnari lands and running over and across lands of Clement W. Perkins the two following courses and distances: (1) N 68°18′52″ E 116.00 feet, and (2) S 21°41′08″ E 150.00 feet to a point on the northwest boundary line of the aforesaid highway S 68°18′52″ W 116.00 feet to the point or place of beginning; containing 0.4 acre of land, more or less.

2.3 Physical Description

The Wilkes-Barre USAR Center is located on a 4.0-acre parcel on the central-eastern side of downtown Wilkes-Barre, Pennsylvania, and contains two permanent structures and two parking lots. Construction of the 21,503-square-foot administration building and the 3,905-square-foot Organizational Maintenance Shop (OMS) building were completed in 1955. Both structures are on concrete foundations and consist of concrete block walls. The main building recently was refinished with stucco, and the OMS building's exterior was recently repainted. The military equipment parking (MEP) area and a privately owned vehicle (POV) parking area also are contained within the Property. Chain-link security fencing, topped with barbed wire, encloses the MEP area and OMS building.

Approximately one-third of the Property is covered by impervious surface features, such as asphalt parking areas, driveways, concrete walkways, and building footprints. The remaining land is grassed, with a sparse population of evergreen trees clustered in the rear of the Property.

2.3.1 Main Administration Building

The administration building is an "L"-shaped multiple-level structure, with a two-story drill hall connected by a one-story enclosed corridor (Photograph 1, Appendix B). The building's interior consists of office space, classrooms, arms vault, storage, former indoor firing range, and a drill hall.

The west end of the building's first floor contains a radon mitigation system, supply rooms, a gymnasium, and latrines. The eastern end of this building consists of administrative offices and the arms vault. Located in the building's center are the boiler room, former coal storage room, latrines, and the lobby. This area also is used to store radiological materials (meters used to monitor nuclear, biological, and/or chemical [NBC] substances). The boiler room has a former coal storage room connected to it. There is a sump pump in this former coal storage room that discharges into the sanitary sewer system (Photograph 2, Appendix B).

The second floor is above the entire northern portion of the building and consists of open office space, classrooms, offices, and a former rifle range. It is important to note that the former firing range is currently being used as office space and storage.

2.3.2 Organizational Maintenance Shop Building

Maintenance activities conducted at the OMS building (Photograph 3, Appendix B) are limited to topping off fluids. The Pennsylvania Department of Environmental Protection (PADEP) issued the facility a Resource Conservation and Recovery Act (RCRA) small quantity generator identification number (PA9211890059). According to 99th Regional Readiness Command (RRC) personnel interviewed, this facility has a contract with Hazleton Salvage to recycle the small amount of petroleum, oil, and lubricant (POL) substances generated.

During the site visit, a flammable storage cabinet was observed in the OMS building. The cabinet contained brake fluid, power steering fluid, motor oil, antifreeze, P-D-680B dry cleaning solvent (Photograph 4, Appendix B), industrial enamel spray paint, reagent water, bleach, etc. At the time of the site reconnaissance, no current inventories of hazardous materials were located. According to 99th RRC personnel, an inventory was performed for all USAR 99th RRC-controlled properties within the past 2 months. Results from this inventory were not available at the time of the site reconnaissance.

A maintenance lube pit had been filled in (Photograph 5, Appendix B); however, no reports containing details of this event were available. A sump pump was observed to be in the OMS building that discharges into the sanitary sewer system (Photograph 6, Appendix B). In addition, the ceiling insulation was in bad condition and observed to be falling down.

2.3.3 Vehicle Wash Area

Presently, there are no vehicles being washed at this facility. In the past, vehicle washing occurred outside the OMS building. The solid waste dumpster has been placed atop of the wash rack to prevent use. There is no oil/water separator (OWS) associated with this wash rack. The existing wash rack is constructed above a concrete-paved stormwater ditch (Photograph 7, Appendix B). An inlet is centered in the wash rack, where the ditch transitions to a 24-inch pipe. The pipe discharges to a downstream stormwater inlet along Highway 315. The wash rack is 17 feet wide by 33 feet long. The storm sewer is about 220 feet away (ACE, 1995). A study performed by USACE in 1995 recommended that a new wash rack, a grit tank, and an OWS be installed near the western wall of the drill hall in the MEP area and connected to the sanitary sewer system. The vent for the OWS was installed in this area, but according to 99th RRC personnel, the project lost funding and was never completed.

2.4 Site Hydrology and Geology

The USAR Center and Wilkes-Barre are located within the Ridge and Valley Province. This province covers all of Luzerne County. The Ridge and Valley Province contains sedimentary rocks such as limestone, dolomite, siltstone, sandstone, conglomerate, and anthracite. These rocks range in age from Cambrian to Pennsylvanian. Rocks are folded into numerous anticlines and synclines. Rocks in these folds generally have steep dips, and erosion has created lone, linear ridges composed of erosion-resistant sandstone. These ridges are separated by broad to narrow valleys that are underlain by erosion-susceptible siltstone, shale, limestone, and dolomite. The valley occupied by Wilkes-Barre contains abundant

anthracite. The section of linear ridges and valleys is separated from the anthracite area by lowland surrounding the Susquehanna River (Parsons, 2005).

Drainage patterns in the Valley and Ridge Province directly reflect the alternating bands of resistant and easily eroded rocks in the folded strata of the province. A few major rivers, such as the Susquehanna River, cut directly across the ridges and valleys. Such streams are called superimposed streams. The Susquehanna River, for example, crosses six major ridges within 50 miles upstream from Harrisburg, Pennsylvania (USGS, 1997).

Circulating, slightly acidic groundwater that moves along fractures and bedding planes in the carbonate rocks has partly dissolved these rocks in places and has created a network of large, interconnected openings that yield substantial quantities of water to wells. The alternating sequences of upfolded and down warped rocks in the Valley and Ridge Province, coupled with the stream network that has developed in the folded rocks, create a series of shallow, isolated, local groundwater flow systems. Most of the groundwater under the ridges flows across the strike of the rocks; but in the valleys, it usually moves along the strike. The flow within these local groundwater systems is predominately within a few hundred feet of the land surface, but circulation in some of the systems is deep enough for the water to become geothermally heated (USGS, 1997).

Folded sedimentary rocks of Paleozoic age underlie the Valley and Ridge Physiographic Province. The strata consist mostly of sandstone, shale, and limestone; coal is present in these rocks in Pennsylvania, and they locally contain minor dolomite and conglomerate. Locally, the rocks have been metamorphosed into quartzite, slate, and marble. Carbonate rocks are the most productive Valley and Ridge aquifers (USGS, 1997).

2.4.1 Surface Water Characteristics

Figure 7 in Appendix A provides a portion of the 1999 Pittston, Pennsylvania U.S. Geological Survey (USGS) topographic map that includes the Property. As shown, the Property is situated at an elevation of approximately 815 feet above mean sea level, and the general topographic gradient is north northwest.

Stormwater sheet flows to storm drains located in the MEP and POV parking areas along Highway 315. A concrete-lined ditch extending from the western side of the Property around the POV parking area, the drill hall, and the MEP area to the wash rack located outside the OMS building provides drainage for the Property. This ditch drains into the storm sewers located along Highway 315.

The closest surface water body to the site is Laurel Run Creek, which is located approximately 0.25 mile north of the USAR Center, and has an approximate water surface elevation of 760 feet above mean sea level. Laurel Run Creek runs into Mill Creek, which ultimately drains into the Susquehanna River, located 2.12 miles northwest of the Property.

According to the EDR radius map (Appendix E), the Property is not included in the 100-year floodplain. This information was gathered by EDR in 1999 from the Federal Emergency Management Agency.

2.4.2 Hydrogeological Characteristics

According to information acquired from the Soil Conservation Service's State Soil Geographic Database (STATSGO) for Luzerne County, specific types of soil at the Property are from the Udorthents Series. The Udorthents Series is not listed as hydric soils (EDR, 2006). Underlying bedrock at the site has been mapped as the Llewellyn Formation. The Llewellyn Formation generally consists of interbedded gray and brown sandstone, siltstone, conglomerate, and shale, with abundant anthracite coal beds (REWAI, 1993).

The surface soils are generally very stony, sandy loams. These soil types have medium to slow infiltration rates with layers impeding downward movement of water and are characterized as soils with coarse textures (EDR, 2006). Based on information reviewed in the EDR report and a review of the topographic maps, groundwater is anticipated to generally flow northwest toward Laurel Run Creek, which runs into Mill Creek and ultimately to the Susquehanna River. Groundwater flow direction in the area of the Property may vary as a result of underground utilities, meteorological factors, or heterogeneous subsurface conditions, among other factors. Subsequent references to upgradient and downgradient properties are based on the estimated northwesterly groundwater flow direction.

2.5 Site Utilities

Water Service—Pennsylvania American Water provides potable water service to the Property.

Sanitary Sewer System—The Plains Township provides sanitary sewer service to the Property. The primary source of wastewater that is directed to the city sewer system includes non-process wastewater (bathrooms, sinks, etc.).

Gas and Electric—Pennsylvania Power and Light provides natural gas service and electric service to the Property.

2.6 Water Supply Wells and Septic Systems

Based on a review of available site and agency records along with interviews with site personnel, neither a water supply well nor a septic system is or was located at the Property. Potable water is supplied by Pennsylvania American Water.

A search of federal and state water well databases identified no water supply sources located within 1 mile of the Property.

3 Site History

3.1 History of Ownership

Land titles for the Property are included in the chain of title report along with the United States District Court for the Middle District of Pennsylvania court proceedings in Appendix C. The land title for the Property was available dating back to 1864. The chain of title report did not identify any leases or environmental liens against the USAR Center property. According to the chain of title report and associated court proceedings, the United States Government acquired the 3.45-acre parcel referred to as Tract A-100 in 1954. A second tract of land referred to as Tract A-103, adjacent to Tract A-100 was acquired by condemnation from the same property owner as Tract A-100 in 1965. Tract A-103 encompasses 0.4 acre of land.

According to a city directory provided by EDR and dated July 24, 2006, the address of the USAR Center was not listed in the research sources (Polk's City Directory and City's City Directory) from 1961 to 2002. A summary of the city directory search conducted by EDR is included in Appendix E.

3.2 Past Uses and Operations

In 1954, the U.S. Government purchased 3.45 of the currently 3.85 acres of property for construction of the USAR Center. The additional 0.4 acre of property was acquired in 1965. Reviews of topographic maps suggest that the Property was undeveloped land prior to the U.S. Government land acquisition. The Property has served as a reserve and mobilization center for USAR since the Government completed construction of the facilities in 1955.

The Property primarily functioned as an administrative, logistical, and educational facility, with limited maintenance of military vehicles occurring in the OMS building. The Property was used by reservists for drill activities on various weekends throughout the year. The 828th Quartermaster, the 220th MP Detachment, and the 3rd/80th Battalion BDE Training Division units currently occupy the USAR Center. At the time of the site reconnaissance, the main building contained various items, including items stored for the different units, desks, office furniture, and folding tables.

The OMS building was used to perform limited maintenance activities on military equipment. Activities inside the OMS building were limited to preventative maintenance checks, including checking vehicle fluids such as motor oil, water, and antifreeze, and light maintenance activities. Any equipment requiring heavier maintenance or overhaul activities was sent to an Area Maintenance Support Activity shop located at one of the other USAR centers in Pennsylvania.

At the time of the site reconnaissance, the OMS building contained a wheeled military vehicle with no drip pan (dark substance underneath with absorbent), a 50-gallon drum for used absorbents, a 50-gallon drum for clean absorbents, one metal trash can for used rags,

five empty 5-gallon fuel containers, acetylene and oxygen compressed gas cylinders, multiple packed crates containing equipment and supplies awaiting shipment, a parts washer (Photograph 8, Appendix B) and solvent, three vehicle batteries, and 5-gallon paint buckets. With the exception of the military vehicle located in the OMS building, only two other military vehicles were observed on the Property during the site reconnaissance.

Vehicle washing would have occurred on the wash rack located outside the OMS building. There has never been an OWS associated with this wash rack. The existing wash rack is constructed above a concrete-paved stormwater ditch. An inlet is centered in the wash rack, beneath the drain, where the ditch transitions to a 24-inch pipe. The pipe discharges to a downstream stormwater inlet along Highway 315. The wash rack is 17 feet wide by 33 feet long. The downstream storm sewer inlet is about 220 feet from the wash rack.

Topographic maps, along with aerial photographs, were the primary source of information on the past use and operations at the Property. Figures 3 through 7 in Appendix A provide USGS topographical maps of the Property in 1949, 1947-1969, 1947-1976, 1947-1980, and 1999.

The 1949 USGS topographic map (Figure 3, Appendix A) shows the Property and areas to the south and east as undeveloped. Limited commercial development is visible north of the Property. The city of Wilkes-Barre is established to the northwest. The 1947-1969 USGS topographic map (Figure 4, Appendix A) shows both the main building and OMS building. Commercial development is more evident in the surrounding areas. The tire center across Highway 315 has now appeared. Interstate 81 has now appeared to the east of the Property along with new on and off ramps. The 1947-1976 USGS topographic map (Figure 5, Appendix A) shows increasing commercial development in the surrounding areas. The 1999 USGS topographic map (Figure 7, Appendix A) shows new interchanges connecting State Highways 315, 115, and 309. Several new buildings have been built and appear in the surrounding areas of the Property.

Aerial photographs from 1969, 1976, and 1999 were the only aerials available for the preparation of this ECP report. Figures 8 through 10 in Appendix A provide the aerial views of the Property and surrounding areas.

The 1969 aerial photograph (Figure 8, Appendix A) shows what appear to be military vehicles or Container Express (CONEX) structures in the MEP area. A couple of buildings are located on the adjacent property to the west. During the site visit in August 2006, these buildings were no longer present. The surrounding areas appear to be in the beginning stages of development, showing only a few businesses along State Highway 315. The Veterans Administration Medical Center is visible to the southwest. The 1976 aerial photograph (Figure 9, Appendix A) is not very clear; however, it does show the outline of the tire center on the adjacent property across State Highway 315. The interchanges for State Highways 315, 115, and 309 have been constructed and are visible in the 1999 aerial photograph (Figure 10, Appendix A). The surrounding areas are more commercially developed, especially north of the Property.

3.3 Past Use, Storage, Disposal, and Release of Hazardous Substances

3.3.1 Past Use and Storage of Hazardous Substances

Information related to the past use and storage of hazardous substances at the Property was compiled through review of available site records, search of federal and state environmental databases, and interviews with Army Reserve personnel. Chemicals formerly used and stored at the Property were associated with vehicle and facility maintenance activities, as well as janitorial services. Janitorial chemicals and building maintenance-related products were stored in the designated storage area, within the janitorial closet located in the main building. Vehicle maintenance products and small amounts of POL products also were stored within designated areas in the OMS building. A paint storage shed was located on a concrete pad outside the OMS building in the MEP area, but it was removed sometime between 1995 and 2006, although the pad remains. A 1997 total facility assessment stated that flammable/combustible materials were being stored improperly in various areas of the main building. During the 2006 site visit, the locations of storage were on impervious structures and present no potential impact to the Property.

Certain types of chemical products, used and stored at the Property, would have contained CERCLA hazardous substances and would have been stored on a rotational basis in amounts necessary to support the unit through direct support-level maintenance. There is no indication, however, that CERCLA hazardous substances were stored at the Property for 1 year or more in excess of corresponding reportable quantities.

3.3.2 Past Disposal and Release of Hazardous Substances

Information related to past disposal and potential release of hazardous substances at the Property was compiled through review of available site records, search of federal and state environmental databases, and interviews with Army Reserve personnel. According to Army Reserve personnel and site records, onsite disposal of hazardous materials or wastes has not occurred at the Property.

No stained soil or stressed vegetation was observed during the August 15, 2006, site reconnaissance. Additionally, the MEP and POV parking areas did not show any signs of staining, and no noxious or foul odors were noted during the site reconnaissance.

3.4 Past Presence of Bulk Petroleum Storage Tanks

Based on a review of available site records, a search of federal and state environmental databases, and interviews with Army Reserve personnel, it does not appear that any aboveground storage tanks (ASTs) currently or formerly were located at this facility, nor was any evidence of any ASTs observed during the site reconnaissance.

Based on a review of available site records, a search of federal and state environmental databases, and interviews with Army Reserve personnel, one underground storage tank (UST) was previously located at the Property, but it was removed on June 14, 1993. The 1,000-gallon steel tank contained No. 2 heating oil and was located on the eastern side of the

OMS building along Highway 315 (REWAI, 1993). The UST was installed sometime after 1956 and has been used to supply No. 2 fuel oil to the OMS building space heaters.

Approximately 70 gallons of residual fluids were removed and drummed from the UST prior to and after its removal. These fluids have subsequently been used by a contractor (Corey, Inc.). The tank was inspected for holes or cracks, and none were evident. Corey, Inc. cleaned, loaded, and removed the tank, sending it to Bielecki Scrap and Recycling Center of Wilkes-Barre, Pennsylvania (REWAI, 1993). At the time of removal, no hydrocarbon staining, odors, or free product were observed to be present in the soil surrounding the UST. Additionally, no holes, loose couplings, or other indications of failure were observed on the UST or attached piping. Subsurface soil samples were collected from the east, south, west, and north sides of the bottom of the UST. Results from the soil sample analysis indicated non-detectable concentrations of benzene, toluene, ethyl benzene, and xylene (BTEX) and concentrations of diesel range organics (DRO) ranging from 19 to 360 milligrams per kilogram (mg/kg) or parts per million (ppm). PADEP usually requires cleanup of soils exceeding 100 mg/kg DRO; however, soil cleanup was not performed because of the good tank condition, screening of the soils in the surrounding excavation area, the UST did not indicate evidence of hydrocarbon, and anomalous DRO concentrations have been documented in association with coal residue.

The closure report further states that because this UST was used to supply fuel oil for space heating, it is not regulated by the federal government or the State of Pennsylvania. The report was submitted to PADEP and states that it does not serve to fulfill any regulatory requirements (REWAI, 1993).

3.5 Review of Previous Environmental Reports

A review of site records produced several reports pertaining to the Property. The following subsections provide a brief summary of some of these reports. Copies of the reports, unless otherwise specified, are provided in Appendix D.

3.5.1 2002 Engineering and Environmental Facility Assessment

USAR performed an internal survey in 2001, listing and evaluating areas on the Property where environmental concerns were apparent. Several areas were noted as needing correction at the time of the assessment. The deficiencies that are likely to have an adverse affect on the environment were as follows:

- Place bollards around the fire hydrant.
- The facility lacks a hazardous materials inventory.
- There is no OWS found in association with the vehicle wash rack. The wash rack drains directly to stormwater runoff.
- Compressed gas cylinders used for welding operations were not stored properly.
- No polychlorinated biphenyl (PCB) surveys conducted for this facility.

3.5.2 1993 UST Closure Report for Wilkes-Barre USARC

This report documents closure activities related to the removal of one 1,000-gallon UST that was used to store No. 2 fuel oil. The report documents analytical results for subsurface soil samples collected from the UST excavation. The closure report states that because this UST was used to supply fuel oil for space heating, it is unregulated by the federal government and by the State of Pennsylvania. The report also states that it does not serve to fulfill any regulatory requirements.

3.5.3 1995 Concept Design/Study Reserve Center Vehicle Wash Sites

USACE, Baltimore District, performed a wash rack survey in 1995, listing and evaluating the existing wash racks of three USAR centers, one of which was Wilkes-Barre. The study described the existing wash racks and then made recommendations. At the Wilkes-Barre USAR Center, it was recommended that the wash rack be relocated to an area outside the drill hall in the MEP area, a grit tank be installed, and an OWS installed that should be connected to the sanitary sewer system.

3.5.4 1995 Cultural Resource Management Plan

A cultural resource management plan for the facility was prepared for the 79th Army Reserve Command by KFS Historic Preservation Group in July 1995. The purpose of the survey, and subsequent report, was to inventory all properties controlled or leased by the 79th Army Reserve Command in Pennsylvania. Historical information, setting and landscape, cultural resources, security, architectural information, and structure descriptions are included for each property. Each site also was assessed for its eligibility to the National Register of Historic Places (NRHP). The report stated that no archaeological sites have been recorded for the immediate vicinity of the USAR Center.

3.5.5 1994 Final Report Lead Abatement

There was an indoor firing range located in the basement in the main building of the USAR Center. The following information was taken from an Executive Summary from the lead abatement final report from Biosphere (Biosphere, 1994). Biosphere removed and decontaminated by high-efficiency particulate air (HEPA) vacuuming and/or wet wiping all of the movable items in the range area. The steel bullet deflectors and lights were removed and disposed of as construction debris. Particleboard walls were partially removed. Difficulty in demolition resulted in keeping a wall left in place. A heating, ventilation, and air conditioning (HVAC) unit also was dismantled and disposed of the same way. All surfaces in the range were decontaminated by lead wash procedures. After these procedures, final clearance wipe samples were collected. All wipe sample results indicate that lead levels are below the 200 micrograms per square foot ($\mu g/ft^2$) clearance standard established for the project. The work area was then cleared for coating/encapsulation.

3.5.6 1997 Total Facility Assessment Report

This report documents an assessment of the USAR Center that was conducted by the Fort Indiantown Gap Facilities Engineering Team of Engineer Support Group-East. The report states that the facility is in good repair, and that there have been recent improvements and

maintenance performed. Major projects completed include window replacement, gas-fired boilers, and a new gas water heater. The report also states that projects have been identified to replace the OMS roll-up doors and its associated weather stripping, replace existing lighting with energy efficient lighting, and repair the ceiling insulation in the OMS building.

4 Adjacent Properties

Adjacent property land uses are significant to the ECP process, as these current or past uses may have an environmental impact on the USAR Center. Adjacent properties were included in the EDR report review for this reason. Typically, adjacent properties within 0.25 mile of the USAR Center property boundaries are reviewed and visually surveyed. For the purposes of this ECP report, the adjacent property reconnaissance was performed from the USAR Center property boundaries and from public access points. Aerial photographs and topographic maps also were reviewed for conditions or activities that may have had an environmental impact on the Property.

4.1 Land Uses

Land use south of the USAR Center is county right-of-way for a major highway (Highway 309/115). Located southwest of the Property is the Veterans Administration Medical Center. To the north is Highway 315. Directly across Highway 315 from the Property are a swimming pool sales center and a tire center. To the east of the Property are four different hotels. To the west lie interchanges for converging highways and a mall. Table 1 summarizes the current adjacent properties, its owners, and distance from the Property.

TABLE 1
Adjacent Properties to USAR Center
Wilkes-Barre USAR Center, Wilkes-Barre, Pennsylvania

Name/Type of Property	Address	Distance and Direction from Property	Remarks
Jack Williams Tire Company	1002 Highway 315 Wilkes-Barre, PA 18702	0.01 mile north	RCRA small quantity generator, storage tanks
Sears Roebuck and Co.	Wyoming Valley Mall Road Wilkes-Barre, PA	1.29 miles west	LUST
Northeast Drywall	359 Laird Street Plains Township, PA	1,793 feet north-northeast	Unregulated tank
Veterans Administration Medical Center	111 East End Center Wilkes-Barre, PA	0.32 mile south-southwest	None
Red Roof Inn	1035 Highway 315 Wilkes-Barre, PA	0.14 mile east	None
Hampton Inn	1063 Highway 315 Wilkes-Barre, PA	0.34 mile east	None
Candlewood Suites	1067 Highway 315 Wilkes-Barre, PA	0.33 mile east	None
Woodlands Inn and Resort	1073 Highway 315 Wilkes-Barre, PA	0.25 mile east	None
Wyoming Valley Mall	Wyoming Valley Mall Road Wilkes-Barre, PA	0.63 mile southwest	None

4.2 Findings

The EDR database search results were reviewed for any evidence that adjacent properties may have past or present environmental issues that would impact the USAR Center.

The Jack Williams Tire Company was listed as a RCRA small quantity generator, but no violations were found. This facility also was listed on PADEP's eFACTS Web site as having three storage tanks. This Web site did not specify whether the three storage tanks were aboveground or underground. There also was no information on whether these tanks were in violation or not. During a drive-by inspection of the tire center, no groundwater monitoring wells were observed; however, a few areas with patched concrete were observed, indicating a possible UST removal. This property is located directly across Highway 315.

Bridgestone/Firestone Inc., located on Highways 115 and 309, was listed as a RCRA small quantity generator; however, no violations were found.

Northeast Drywall was listed in the unregulated tank list. It states that the tank contained No. 2 fuel oil. The radius search did not provide additional information. There was no information available for this site on PADEP's eFACTS Web site. This site is located 1,793 feet north-northeast of the Property.

The Luzerne County Maintenance Facility was listed as an orphan site. An orphan site is a site that has poor or inadequate address information and could not be mapped. This facility was listed by EDR in the leaking underground storage tank (LUST), leaking aboveground storage tank (LAST), and archive AST databases. This site also was listed on PADEP's eFACTS Web site. According to eFACTS, this facility had closed four USTs; all four were found to be leaking. Diesel fuel and unleaded gasoline were released into the groundwater and soil. The Web site states that 11 water supplies were affected by this release. This release occurred in 1996. No. 2 fuel oil was released from one of the USTs into groundwater and soil. There also was an AST at this site. A 10,000-gallon AST was removed in the summer of 2002. It was found that the surface soil around the pump out location was contaminated with waste oil. Free product described as "tar" was seen in the soil beneath the former AST location. It was stated that Rapid Response was to do the cleanup for the Pennsylvania Department of Transportation. This facility was given two notices of violation, one of which was a citation for tank closure. Neither EDR nor the PADEP eFACTS Web site gave adequate address information. The PADEP Web site identified the location as on Highway 115 with a zip code of 18703. This zip code was mapped using Google Earth. The area of the 18703 zip code appears to be located outside the standard ASTM search radius distances from the Property. This site, therefore, is not likely to have an adverse effect on the USAR Center.

Water well databases at the federal and state level were reviewed and did not identify any water supply source near the Property.

The 1969 aerial photograph (Figure 8, Appendix A) shows what appear to be military vehicles or CONEX structures in the MEP area. A couple of buildings are located on the adjacent property to the west. During the site visit in August 2006, these buildings were no longer present. The surrounding areas appear to be in the beginning stages of development,

showing only a few businesses along State Highway 315. The Veterans Administration Medical Center is visible to the southwest. The 1976 aerial photograph (Figure 9, Appendix A) is not very clear; however, it does show the outline of the tire center on the adjacent property across State Highway 315. The interchanges for State Highways 315, 115, and 309 have been constructed and are visible. The surrounding areas are more commercially developed, especially to the north of the Property.

5 Review of Regulatory Information

An essential component of an ECP is the review of records and databases containing information on the Property and adjacent properties. The review includes reasonably obtainable federal, state, and local government records, and is intended to identify a release or likely release of any hazardous substance or any petroleum product, which is likely to cause a release or threatened release of any hazardous substance or any petroleum product to the Property.

The majority of the regulatory information for this ECP was obtained from EDR on July 19, 2006. EDR provides a regulatory database summary that consolidates standard federal, state, local, and tribal environmental record sources based on ASTM-recommended minimum search distances from the Property.

All findings reported in Sections 5.1, 5.2, and 5.3 are from the EDR report unless otherwise noted. A copy of the complete EDR report is included in Appendix E.

5.1 Federal Environmental Records

5.1.1 Federal National Priorities List Sites within 1 Mile

USEPA maintains a record of the nation's worst uncontrolled or abandoned hazardous waste sites, known as the National Priorities List (NPL). Sites on the NPL undergo long-term remedial action under CERCLA. The USAR Center is not an NPL site, nor were any such sites located within 1 mile of the Property.

5.1.2 Federal Comprehensive Environmental Response, Compensation and Liability Act Information Systems Sites within 0.5 Mile

The CERCLA Information System (CERCLIS) contains data on potentially hazardous waste sites that have been reported to USEPA by state, municipalities, private companies, and private persons, pursuant to Section 103 of the Act. CERCLIS contains sites that either are proposed to be or are on the NPL and sites that are in the screening and assessment phase for possible inclusion on the NPL.

The USAR Center is not a CERCLIS site, and there are no CERCLIS sites located within 0.5 mile of the Property.

5.1.3 Resource Conservation and Recovery Act Corrective Action Sites within 1 Mile

RCRA corrective action sites (CORRACTS) represent facilities that have generated or managed hazardous wastes and require corrective action. The USAR Center is not a CORRACTS, nor were any such sites identified within 1 mile of the USAR Center.

5.1.4 RCRA Transport, Treatment, and/or Disposal Sites within 0.5 Mile

RCRA defines and regulates sites that generate, transport, store, treat and/or dispose (TSD) of hazardous wastes. The RCRA Information System (RCRIS) includes selective information on these sites.

The USAR Center is not an RCRIS TSD site, and there are no such sites located within 0.5 mile of the USAR Center.

5.1.5 Federal RCRA Small and Large Quantity Generators List within 0.25 Mile

Conditionally exempt small quantity generators are defined as facilities generating less than 100 kg of hazardous waste, and less than 1 kg of acutely hazardous waste per month. RCRA small quantity generators are defined as facilities generating between 100 and 1,000 kg of hazardous waste and less than 1 kg of acute hazardous waste per month. A facility generating more than 1,000 kg of hazardous waste or over 1 kg of acutely hazardous waste per month is defined as a large quantity generator.

The USAR Center is listed as an RCRA-registered small quantity generator. No RCRA violations are associated with the USAR Center.

One adjacent property owner is an RCRA-registered small quantity generator. Bridgestone/Firestone, Inc. is located within 0.25 mile of the USAR Center, approximately 1,206 feet west of the Property. No RCRA violations were noted for this site.

No large quantity generators are located within 0.25 mile of the USAR Center.

5.1.6 Federal Emergency Response Notification System List

The Federal Emergency Response Notification System (ERNS) List maintains information on reported releases of oil and hazardous substances. The USAR Center is not on this notification list.

5.2 State and Local Environmental Records

Most of the information presented in this subsection was obtained from the EDR report. Additional information also was obtained from online database searches of the State of Pennsylvania's Web site: http://www.depweb.state.pa.us/dep/site/default.asp. Occasionally, state and local agency personnel were interviewed via telephone to answer questions about any database issues.

5.2.1 State Lists of Hazardous Waste Sites within 1 Mile

The USAR Center is not on the state list of hazardous waste sites. No adjacent properties within 1 mile of the USAR Center were listed as having a hazardous waste site.

5.2.2 State-Registered Landfills or Solid Waste Disposal Sites within 0.5 Mile

The USAR Center does not have a solid waste landfill, incinerator, or transfer station within the Property boundaries. No adjacent properties within 0.5 mile of the USAR Center have a solid waste landfill, incinerator, or transfer station.

5.2.3 State-Registered Leaking UST Sites within 0.5 Mile

In addition to information obtained from the EDR report, the Pennsylvania Environmental Cleanup Program, Storage Tank Section maintains a comprehensive database of LUST sites. The USAR Center is not listed in the state LUST database. No adjacent properties within 0.5 mile of the USAR Center have a LUST.

5.2.4 State-Registered UST Sites within 0.5 Mile

A review of the EDR report and the State of Pennsylvania's UST database indicated no UST sites were identified within 0.5 mile of the USAR Center.

5.2.5 State Spills Incidents

The USAR Center is not listed on the Pennsylvania state petroleum spill list.

5.2.6 Records of Contaminated Public Wells

The City of Wilkes-Barre Water and Sewer Board does not own or operate any municipal water supply wells within 0.5 mile of the USAR Center.

5.2.7 Voluntary Remediation Program Sites within 0.5 Mile

The USAR Center is not listed in Pennsylvania's Brownfield Program (the successor to the Voluntary Cleanup Program). No sites located within 0.5 mile of the USAR Center are listed as being in the Brownfield Program either.

5.2.8 State-Registered Bulk Fertilizer and Pesticide Storage Facilities within 0.25 Mile

The State of Pennsylvania does not maintain a state database of bulk fertilizer or pesticide facilities; however, during the site reconnaissance, no evidence of the Property being used as a bulk fertilizer or pesticide facility was observed.

5.3 Unmapped Sites

Some sites within the databases EDR searches have the same zip code as the USAR Center, but no street address. These sites, known as unmapped or orphan sites, cannot be mapped from the EDR results alone. Additional efforts described herein were made to locate these sites and assess their environmental importance to the USAR Center.

Using the mapping utility provided at maps.google.com, the locations of the orphan sites were identified and mapped. One of the sites, Jack Williams Tire Company, is located within the corresponding ASTM search radius distance. This facility is located directly across Highway 315 from the Property.

The Luzerne County Maintenance Facility was listed as an orphan site. This facility could not be mapped on any of the leading mapping sites due to the lack of address information. The exact location of this facility in regards to the Property is unknown. This facility was listed by EDR in the LUST, LAST, and archive AST databases. This site also was listed on PADEP's eFACTS Web site. According to eFACTS, this facility had closed four USTs; all

four were found to be leaking. Diesel fuel and unleaded gasoline were released into the groundwater and soil. The Web site states that 11 water supplies were affected by this 1996 release. No. 2 fuel oil was released from one of the USTs into groundwater and soil. There also was an AST at this site. A 10,000-gallon AST was removed in the summer of 2002. It was found that the surface soil around the pump out location was contaminated with waste oil. Free product described as "tar" was seen in the soil beneath the former AST location. It was stated that Rapid Response was to do the cleanup for the Pennsylvania Department of Transportation. This facility also was given two notices of violation, one of which was a citation for tank closure. Neither EDR nor the PADEP eFACTS Web site provided adequate address information other than it was located on Highway 115, zip code of 18703. This zip code was mapped using Google Earth, and its boundaries are over 1 mile away from the Property. The area of this zip code is located outside the standard ASTM search radius distances from the Property. Because of its distance from the Property, this site is not likely to have an adverse effect on the USAR Center.

5.4 Summary of Properties Evaluated to Determine Risk to the Property

To summarize Sections 5.1 through 5.3, four separate properties, near or adjacent to the USAR Center, were evaluated as potential risk properties to the Property. These adjacent properties evaluated were identified as a result of information obtained during area reconnaissance, interviews, and regulatory database searches, and are summarized in Table 2.

Based on an evaluation of available site information and details concerning the properties listed in Table 2, none of the facilities evaluated exhibited significant environmental conditions that have the probability of adversely affecting the environmental conditions at another site.

TABLE 2
Properties Evaluated for Potential Environmental Risks
Wilkes-Barre USAR Center, Wilkes-Barre, Pennsylvania

Company/Site	Database	Elevation Relative to Property?	Potential Impact on the Property?	Comments
Jack Williams Tire Company	RCRA Small Quantity Generator	Lower	No	No RCRA violations were listed.
Sears Roebuck and Co.	LUST	Unknown	No	Located 1.29 miles away (outside search radius).
Northeast Drywall	Unregulated Tank	Lower	No	
Luzerne County Maintenance Facility	LUST, LAST, Archive AST	Unknown	No	Could not be located on map; inadequate address information. Site zip code appears to be located outside the standard ASTM search radius distances from the Property.

LAST – leaking aboveground storage tank
LUST – leaking underground storage tank
RCRA – Resource Conservation and Recovery Act

6 Site Investigation and Review of Hazards

Findings documented in the following subsections are based on the August 15, 2006, site reconnaissance, a review of available site records, and information obtained from USAR personnel.

6.1 USTs/ASTs

A No. 2 fuel oil UST associated with this facility was removed on June 14, 1993. Since this UST was used to supply fuel oil for space heating, it was unregulated by the federal government and the State of Pennsylvania. A closure report was submitted. Tank removal activities indicated there were no loose or leaking fittings, no holes in the tank, no soil staining, no POL odors, and soil sampling during tank removal did not detect BTEX. Detections of total petroleum hydrocarbons (TPH) in the DRO range were within the range of naturally occurring concentrations commonly found in the area, due to the presence of coal in subsurface formations. Furthermore, this UST was not listed under the PADEP, Land Recycling Program, Bureau of Waste Management, Storage Tank Cleanup Program.

6.2 Inventory of Chemicals/Hazardous Substances

Records pertaining to hazardous substances including hazardous materials, chemical bulk storage, petroleum products, hazardous waste, and petroleum waste were reviewed in addition to interviews and the site reconnaissance to develop the inventory for this Property.

Evidence of chemical storage was observed during the August 15, 2006, site reconnaissance, and includes the following:

- Motor oil
- Diesel oil
- Brake fluid
- Transmission fluid
- Antifreeze
- Batteries
- Dry cleaning solvent
- Hydraulic oil
- Grease
- Spray paint
- Insect repellent
- Oxygen and acetylene tanks

Inside the OMS building, two metal drums containing used rags were located on the floor. A few batteries and five empty gas cans were stored directly on the floor of the OMS

(Photograph 9, Appendix B). Compressed gas cylinders containing acetylene and oxygen were stored inside and outside the OMS building and were not secured.

Landscaping services are performed by a private commercial company, and facility personnel interviewed during the August 15, 2006, site reconnaissance were not aware of the use of any pesticides or herbicides.

6.3 Waste Disposal Sites

Available records and interviews did not indicate the practice of onsite waste disposal, other than through managed storage and offsite disposal, or through the sewer or septic systems. No waste disposal sites were observed during the site reconnaissance, nor were any signs of past onsite waste disposal (such as stressed vegetation or suspicious depressions in the landscape) observed.

6.4 Pits, Sumps, Drywells, and Catch Basins

Available records, interviews, and site observations did not indicate the existence or past existence of any pits, drywells, or catch basins.

During the site reconnaissance, a sump was noted in the coal storage room attached to the boiler room on the first floor of the main building. Another sump was observed in the OMS building. Both of these sump pumps discharge into the sanitary sewer system.

6.5 Asbestos-containing Material

A work order from CET Microbac Laboratory, Inc., dated March 6, 1987, called for the collection and analysis of 150 suspected asbestos samples. This is the only indication of any action taken in regards to asbestos. A 2002 E2FA stated that, "Suspect asbestos-containing 9x9 inch floor tiles were found under the new 12x12 inch floor tiles, and suspect asbestos containing pipe insulation was found in the OMS. No asbestos survey could be found onsite" (Army, 2002). During the August 15, 2006, site visit, 9-inch by 9-inch tiles were observed in the main building in the gymnasium area (Photograph 10, Appendix B).

6.6 PCB-containing Equipment

There are three pole-mounted transformers that supply underground service entrance conductors for the main building. There are no pad-mounted transformers onsite. In a December 3, 1990, memorandum from UGE Corporation, the oil in the three pole-mounted transformers at the USAR Center was tested for PCBs and was found to be less than the detectable limit of 1 ppm.

6.7 Lead-based Paint

No documents indicating an LBP survey being conducted were available at the time of the preparation of this ECP report. The 99th RRC personnel interviewed had no knowledge of

any LPB surveys that were performed for this facility. Because the main building and the OMS building were constructed before 1981, there is potential for LBP. At the time of the site reconnaissance, the painted surfaces at this USAR Center were in good condition, only noting a few areas with cracked paint on the interior of the facilities. The only area on the exterior of the main building that was painted was the chimney. No peeling paint was observed on the chimney. A 2002 E2FA stated that the OMS building's exterior was recently painted. The paint was still in good condition.

6.8 Radon

A site-specific radon survey was conducted at the USAR Center in 1995. Results from this survey indicated that radon levels were above USEPA's recommended maximum allowable exposure level of 4 picoCuries per liter (pCi/L). In a radon mitigation systems report, it was discovered that radon had leaked into the building primarily through a hollow underground duct (ARS, 1995). Passive detection equipment was installed throughout the main building to determine levels of radon gas over a 3-month period. Based on the sampling results, several sample locations exhibited elevated radon levels above USEPA's recommended maximum allowable exposure level. As a result, a radon mitigation system was installed in 1995. A radon monitoring report indicated that radon levels have dropped significantly and were under USEPA's recommended maximum allowable exposure level of 4.0 pCi/L (Landauer, 1996). No follow on radon monitoring reports, since 1996, were available during the preparation of this ECP report.

In addition, the USEPA map of radon zones for Luzerne County, Pennsylvania confirms that the county lies within the high priority zone, Zone 1, which has a predicted average indoor screening level greater than USEPA's recommended maximum allowable exposure level of 4.0 pCi/L.

6.9 Munitions and Explosives of Concern

Based on a review of available records, the site reconnaissance, and interviews with USAR Center personnel, there are no indications that munitions and explosives of concern (MEC) are or were present at the Property.

There was an indoor firing range located on the second floor in the main building. The following information was taken from an Executive Summary from the lead abatement final report from Biosphere (Biosphere, 1994). Biosphere removed and decontaminated by HEPA vacuuming and/or wet wiping all of the movable items in the range area. The steel bullet deflectors and lights were removed and disposed of as construction debris. Particleboard walls were partially removed. Difficulty in demolition resulted in keeping a wall left in place. The HVAC unit also was dismantled and disposed of the same way. All surfaces in the range were decontaminated by lead wash procedures. After these procedures, final clearance wipe samples were collected. All wipe sample results indicate that lead levels are below the 200 $\mu g/ft^2$ clearance standard established for the project. The work area was then cleared for coating/encapsulation. This report is included in Appendix D.

IT Corporation performed a range inspection at the USAR Center on April 17, 2002. A follow-up inspection to collect wipe samples was conducted on August 16, 2002. The following is a summary of the range cleanup (IT, 2003):

> The range had been previously cleaned and all range components – including the firing line, shooter partitions, target retrieval system, bullet trap, and deflector plates – had been removed. No sand or lead shot was observed during the inspection. The former range was now used for storage and being converted into office space. The concrete block walls were painted and the sound deadening material in the firing line area had been covered with drywall and painted. The ceiling was covered with a new, acoustical tile drop ceiling. The range floor was constructed of concrete and had been clean and sealed. The floor in the bullet trap area was plywood, possibly covering a former sand trap. Windows were installed along the outside wall and at least one partition wall was constructed to divide the range. Desks, tables, chairs, office equipment, shelves, filing cabinets, and wall lockers, now occupied the former range. A closet was located through a doorway behind the former firing line. Two rows of fluorescent lights also ran along the entire length of the range.
>
> All of the range structures associated with the indoor range at the Wilkes-Barre U.S. Army Reserve Center, Wilkes-Barre, Pennsylvania, were previously removed. The range had been cleaned, painted, and converted into storage and office space. Clearance wipe samples collected by IT Corporation document that residual lead levels in the range concrete are below the clearance level of 200 µg/sf [µg/ft^2]. The value of 200 ug/sf [µg/ft^2] was derived as a value that would release the indoor ranges as a room that could be reoccupied as a non-lead work area. This value has also been selected by other federal agencies as acceptable. Based on a review of the clearance wipe sample data, IT concludes that no further range cleanup is necessary for the Wilkes-Barre U.S. Army Reserve Center and the range is approved for re-occupancy.

6.10 Radioactive Materials

Based on the August 15, 2006, site reconnaissance and interviews with USAR Center personnel, radioactive materials were present in equipment used on the Property. Meters used to monitor NBC hazards were stored in the main building. These meters apparently contain small quantities of radioactive material in sealed containers and are not regulated.

7 Review of Special Resources

7.1 Land Use

The City of Wilkes-Barre's zoning information was not available for review; however, surrounding land use was observed to be primarily commercial and residential. The Property would be considered light industrial use.

7.2 Coastal Zone Management

The PADEP Water Planning Office is the lead agency for the Pennsylvania Coastal Zone Management Program. This Property is not included in the coastal zone management plan, nor is it in a coastal zone (PADEP, Coastal Zone Management Program).

7.3 Wetlands

According to the U.S. Fish and Wildlife Service (USFWS) National Wetlands Inventory map, no jurisdictional wetland areas are identified on the Property or on adjacent properties.

During the August 15, 2006, site reconnaissance, no conditions were present that suggested the presence of wetlands on the Property (that is, areas with standing water or wetland vegetation). Based on STATSGO data, the soils present at the Property are from the Udorthents Series, which is classified as a very stony, sandy loam and does not meet the requirements for a hydric soil (that is, wetland indicator soils) (EDR, 2006).

7.4 100-year Floodplain

A review of EDR's radius map indicates that the Property lies outside the 100-year floodplain (Appendix E).

7.5 Natural Resources

A report entitled *Programmatic Natural Resource Management Plan 79th Army Reserve Command Pennsylvania* was prepared for the 79th RRC (Unknown Author, 1995) in an effort to inventory and manage natural resources found at 79th RRC facilities in central and southeastern Pennsylvania. The report concluded that the Wilkes-Barre USAR Center did not contain any key natural resources, including wetlands, surface water, rare species, and/or the potential for rare species.

7.6 Cultural Resources

A cultural resource management plan for the facility was prepared for the 79th Army Reserve Command by KFS Historic Preservation Group in July 1995. The purpose of the

survey and subsequent report was to inventory all properties controlled or leased by the 79th Army Reserve Command in the state of Pennsylvania. Historical information, setting and landscape, cultural resources, security, architectural information, and structure descriptions are included for each property. Each site also was assessed for its eligibility to the NRHP. At the time this cultural resource management plan was written, the buildings at this USAR Center were less than 50 years of age and were ineligible for the NRHP. In addition, the USAR Integrated Cultural Resources Management Plan (Parsons, 2005) states that, "A review of the historic buildings and structures files and the NRHP files maintained at the PHMC in Harrisburg indicates that…no previously recorded historic buildings or structures lie within the facilities owned or leased by the 99th [RRC] in Pennsylvania." This is no longer true. A Section 110 cultural resources survey report for the Property has not been prepared for this facility. Since most buildings on the Property are now at least 50 years old, the buildings may meet the criteria for nomination to the NRHP. Additionally, no archaeological sites have been recorded for the immediate vicinity of the facility. Appendix D contains a copy of these reports.

7.7 Other Special Resources

Based on a review of available current and historical documents, no additional special resources were identified on the Property or the immediate surrounding area.

8 Conclusions

The following information was obtained after conducting an environmental record search including records for adjacent properties, reviewing available historical information, conducting interviews with knowledgeable parties connected with the Property or with state and local agencies, and conducting a reconnaissance of the Property and adjacent properties.

8.1 Review of Findings

Hazardous Substances. Hazardous substances pursuant to CERCLA Section 101(14) (42 United States Code 9601 (14)) were used and stored at the Property in amounts necessary to support unit-level vehicle and building maintenance activities. Available information indicates, however, that the quantities stored would not have resulted in a significant release to the environment. There is no evidence (no available reports or persons interviewed) that the hazardous substances used or stored were released or disposed of at the Property.

The Property has an inactive vehicle wash rack that discharged directly to the stormwater system. While there was no closure documentation or information on drain pipe or soil conditions for the wash rack, there was no evidence of a release. Any releases that might have occurred from cracks in the wash rack would be expected to be de minimis quantities.

USTs/ASTs. Available records do not indicate any ASTs currently or formerly located at this facility. One 1,000-gallon UST containing No. 2 fuel oil was located at this Property and was removed in 1993. The closure report documents analytical results for subsurface soil samples collected from the UST excavation as well as the tank and piping conditions at the time of removal. The report stated there was no evidence of a release when the tank was removed and no detections of BTEX in soil samples; however, TPH was detected in soil samples. The report indicates the TPH detections could have been the result of naturally occurring concentrations due to the presence of coal in the area. The closure report states that because this UST was used to supply fuel oil for space heating, it is unregulated by the federal government and the State of Pennsylvania.

Non-UST/AST Petroleum Storage. Petroleum storage other than in USTs or ASTs was observed on the Property. Several quarts of POL were stored in the flammable storage cabinets located in the OMS building.

PCBs. There are three pole-mounted transformers at the USAR Center that do not contain PCBs.

Asbestos-containing Material. A work order from CET Microbac Laboratory, Inc., dated March 6, 1987, called for the collection and analysis of 150 suspected asbestos samples. This is the only indication of any action taken in regards to asbestos at the Property. While no asbestos surveys were performed, asbestos is suspected in 9-inch by 9-inch floor tiles under the new 12-inch by 12-inch floor tiles and in pipe insulation in the OMS building.

LBP. No LBP surveys have been conducted at the Property. Facilities constructed before 1981 are likely to have been treated with lead-containing paint. All buildings on the Property were constructed before 1981 and, therefore, have the potential to have LBP present. At the time of the site survey, painted surfaces were in good condition, with a few interior areas with chipped or peeling paint.

Radiological Materials. Based on the August 15, 2006, site reconnaissance and interviews with USAR Center personnel, radioactive materials were present in equipment used on the Property. Meters used to monitor NBC hazards were stored in the main building. These meters apparently contain small quantities of radioactive material in sealed containers and are not regulated.

Radon. The 1995 radon survey (ARS, 1995) results indicated that sampling locations exhibited radon levels above USEPA's recommended maximum allowable exposure level of 4.0 pCi/L. A radon mitigation system was installed in 1995. Radon monitoring (Landauer, 1996) indicated that radon levels have dropped below USEPA's recommended maximum allowable exposure level of 4.0 pCi/L.

MEC. Available records do not indicate any MEC currently or formerly located at this Property. No evidence of MEC was observed during the site reconnaissance. There was a firing range located on the second floor of the main building. The former range was closed and cleaned in 1994 and converted to classroom space and storage.

Surrounding Properties. Potential environmental sites of concern, located within the standard ASTM search radius distances from the Property, were evaluated through database review and site reconnaissance. None of the adjacent properties evaluated exhibited environmental conditions that had or have the potential to adversely affect environmental conditions at the Property.

Wetlands and Floodplain. According to the USFWS National Wetlands Inventory maps, the 2006 EDR report, and visual observations, no wetlands were observed or appear to be associated with any of the facilities at this site or with any adjacent properties. The Property is not located within a 100-year floodplain or within a coastal zone.

Threatened and Endangered Species. A 1995 natural resources report concludes that the USAR Center does not contain any key natural resources, including wetlands, surface water, rare species, and/or the potential for rare species.

Archaeological and Historical Resources. A Section 110 cultural resources survey report for the Property has not been prepared. Since most buildings on the Property are at least 50 years old, the buildings may meet the criteria for nomination to the NRHP. Additionally, no archaeological sites have been recorded for the immediate vicinity of the facility.

8.2 Environmental Condition of Property

Findings of this ECP report were based on readily available environmental information, interviews with site and state and local personnel, review of previous environmental studies and federal and state database, and file information related to the storage, release, treatment or disposal of hazardous substances or petroleum products. Results also were based on visual observations of the Property and adjacent properties.

In accordance with DoD policy defining the classifications (see Sherri Goodman memorandum dated 21 October 1996), the Property has been classified into one of seven property types. Based on the results of this ECP study, the Property has been assigned an overall DoD Environmental Condition Type 1. The Property type is based on the following major findings:

- The former 1,000-gallon No. 2 heating oil UST, which was located on the west side of the OMS building, was removed in 1993. The report prepared during removal did not identify any holes, leaks, or loose fittings during removal. No visually stained soils were noted in the report. Soil sampling preformed did not identify any detections for BTEX. TPH detections in the DRO range were considered background by the report, based on the known presence of coal in the general area.
- The wash rack and drain collected wash fluids that would have included POL products, cleaning solvents used in the cleaning of vehicle components, and antifreeze. There were no visible cracks observed during the 2006 site reconnaissance and no reported piping failures. While there was no closure documentation for the wash rack, there was no documentation or evidence of a release and any releases that might have occurred from cracks in the wash rack would be expected to be de minimis quantities.

9 References

Persons Contacted

Mr. Jason Clutter, GS Environmental Protection Specialist, RSO #2, 570-342-3786 x 1220 (office), 570-417-9556 (cell), August 15, 2006

Mr. Ray Spriggs, Environmental Protection Specialist/Automation Program Manager, 570-342-3786 (office), 570-417-7815 (cell), August 16, 2006

Mr. John Stevens, Facilities Manager Supervisor, 570-342-3040 (office), August 16, 2006

Mr. John Yando, Building Coordinator, 570-824-3587 x 8101 (office), August 15, 2006

Resources Consulted

Aerial photographs provided by Banks Information Solutions, Inc., dated 1969, 1976, and 1999

U.S. Geologic Survey (USGS) 7.5-minute topographic maps provided by Environmental Data Resources, Inc. (EDR) 1949, 1947-1969, 1947-1976, 1947-1980, 1994, and 1999 Pittston Quads

Pennsylvania Brownfield Inventory, http://www.pasitefinder.state.pa.us

Pennsylvania Department of Environmental Protection (PADEP), Land Recycling Program, Bureau of Waste Management, Storage Tank Cleanup Location, http://www.depweb.state.pa.us/landrecwaste/lib/landrecwaste/storagetankcleanups/tankincidents.xls

Cultural Resources GIS, https://www.dot7.state.pa.us

USEPA Map of Radon Zones, http://www.epa.gov/radon/zonemap.html

Pennsylvania Department of Environmental Protection (PADEP), Water Planning Office, Coastal Zone Management Program. http://www.dep.state.pa.us/river/czmp.htm

Works Cited

416th Engineer Command. 1997. *Total Facility Assessment Report*. April.

416th Engineer Command. 2002. E*ngineering and Environmental Facility Assessment*. January.

American Radon Solutions. 1995. *Radon Mitigation Systems Description for Wilkes-Barre USARC*. November.

Biosphere. 1994. *Lead Abatement Final Report*. January.

IT Corporation. 2003. *Range Cleanup-PA099, 99th RRC, Wilkes-Barre U.S. Army Reserve Center, Wilkes-Barre, Pennsylvania*. July.

KFS Historic Preservation Group. 1995. *79th Army Reserve Command Cultural Resource Management Plan*. July.

Landauer, Inc. 1996. *Radon Monitoring Report.* December.

Parsons, Inc. 2005. *U.S. Army Reserve Integrated Cultural Resources Management Plan Historic Properties Component*.

R.E. Write Associates, Inc. 1993. *UST Closure Report*. July.

Unknown Author. 1995. *Programmatic Natural Resource Management Plan 79th Army Reserve Command Pennsylvania*.

U.S. Army Corps of Engineers (USACE), Baltimore District. 1995. *Concept Design/Study Reserve Vehicle Wash Sites.* June.

U.S. Geological Survey (USGS). 1997. *Groundwater Atlas of the United States.*

Appendix A
Figures

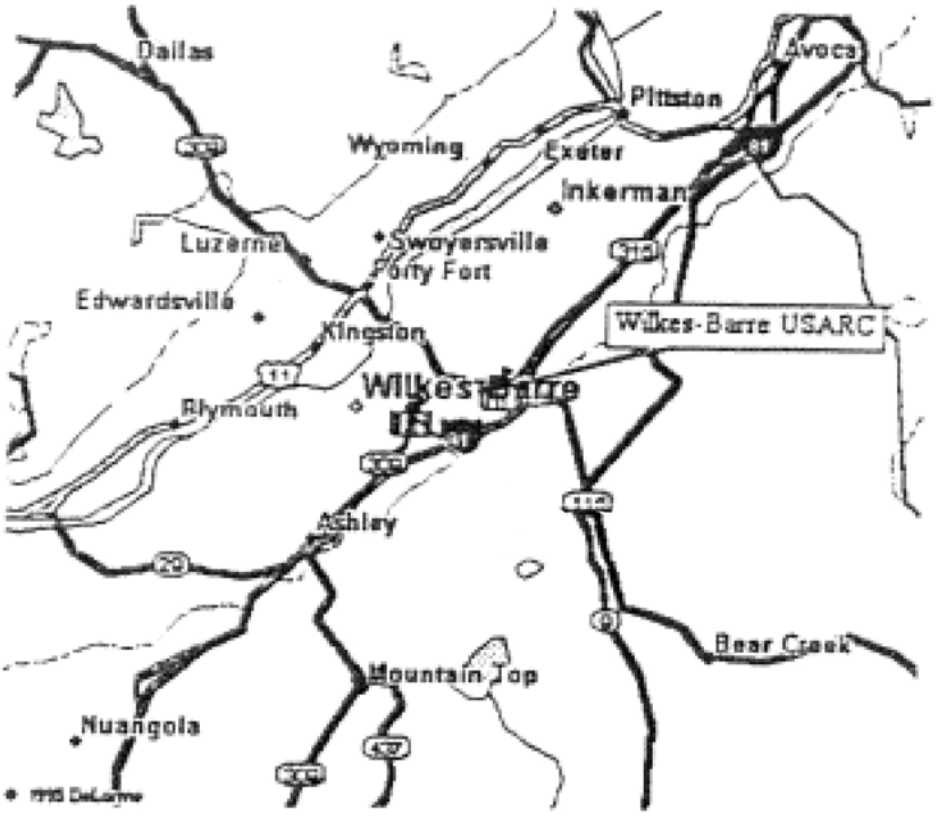

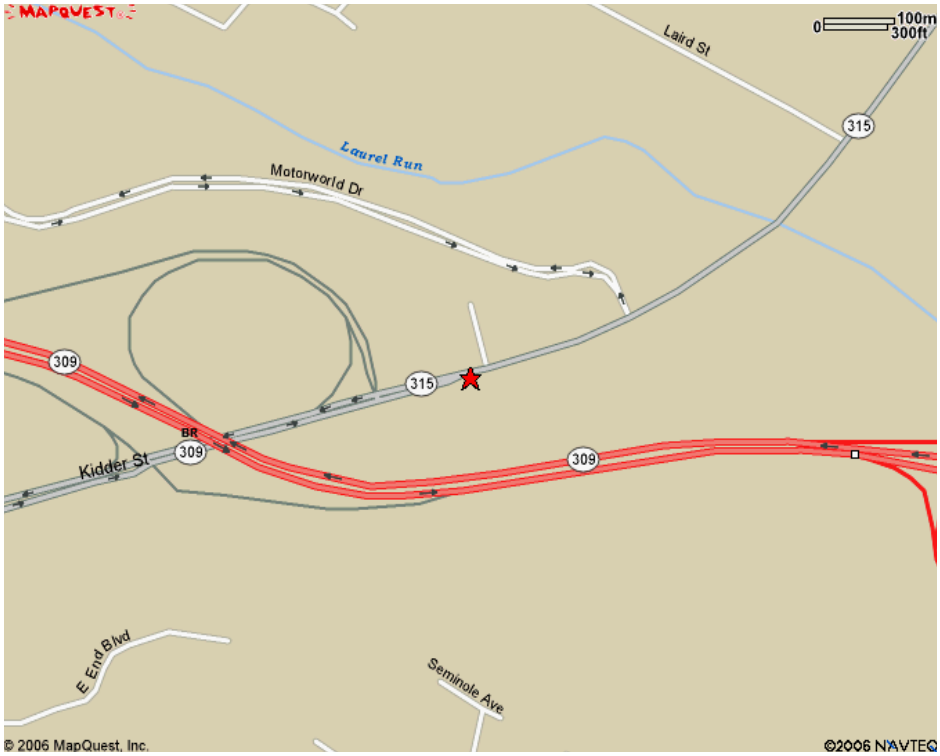

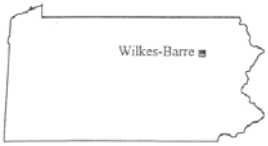

North

Not to Scale

FIGURE 1
General Site Location Map
Phase I ECP Report

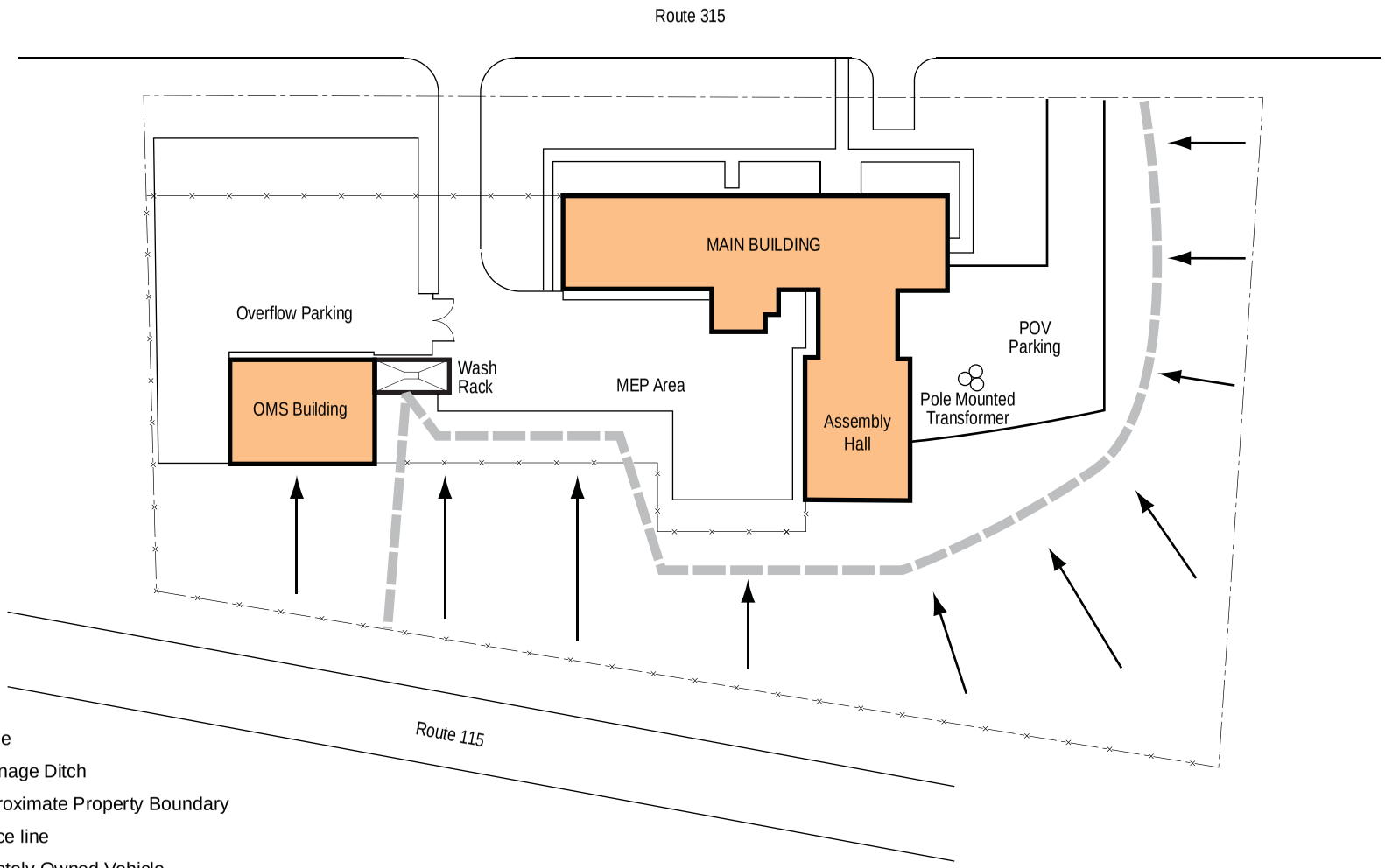

LEGEND

- Slope
- Drainage Ditch
- Approximate Property Boundary
- Fence line
- POV Privately Owned Vehicle
- MEP Military Equipment Parking
- OMS Organizational Maintenance Shop

North

0 80
Approximate scale in feet

FIGURE 2
Site Layout Plan
Phase I ECP Report

CH2MHILL

ES082006013MKE Wilkes_Barre\Figure_2_Site_Layout_Plan_v3 9-28-06 mjl\cae

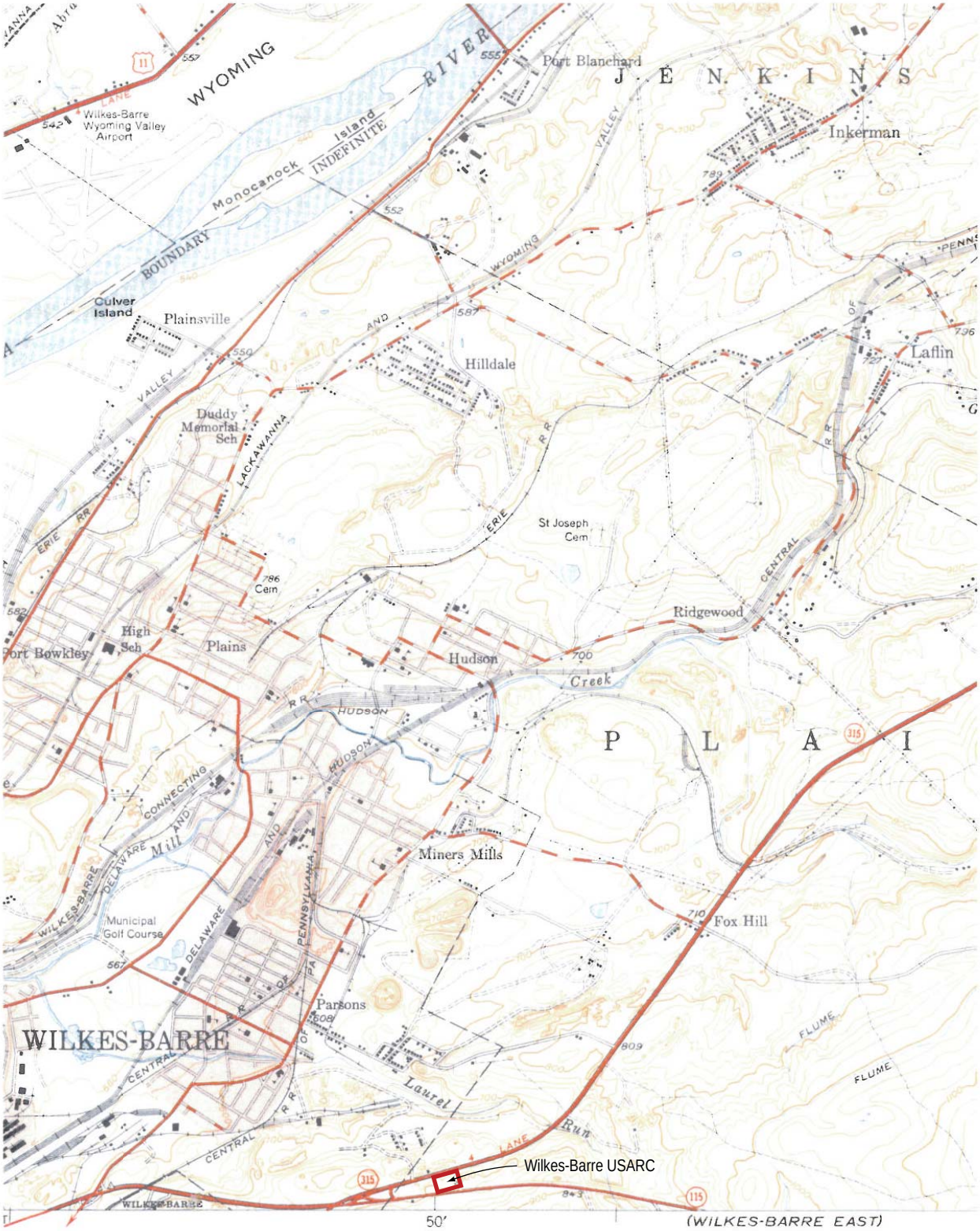

North

0 12,000 24,000

Approximate scale in feet

SOURCE: USGS 7.5' Quad: Pittston

FIGURE 3
1949 USGS 7.5-Minute Topographic Map,
Pittston, Pennsylvania
Phase I ECP Report

CH2MHILL

ES082006013MKE Wilkes_Barre\Figure_3_1949 USGS 7.5 Topo_Pittston_v3 01-02-07 cae

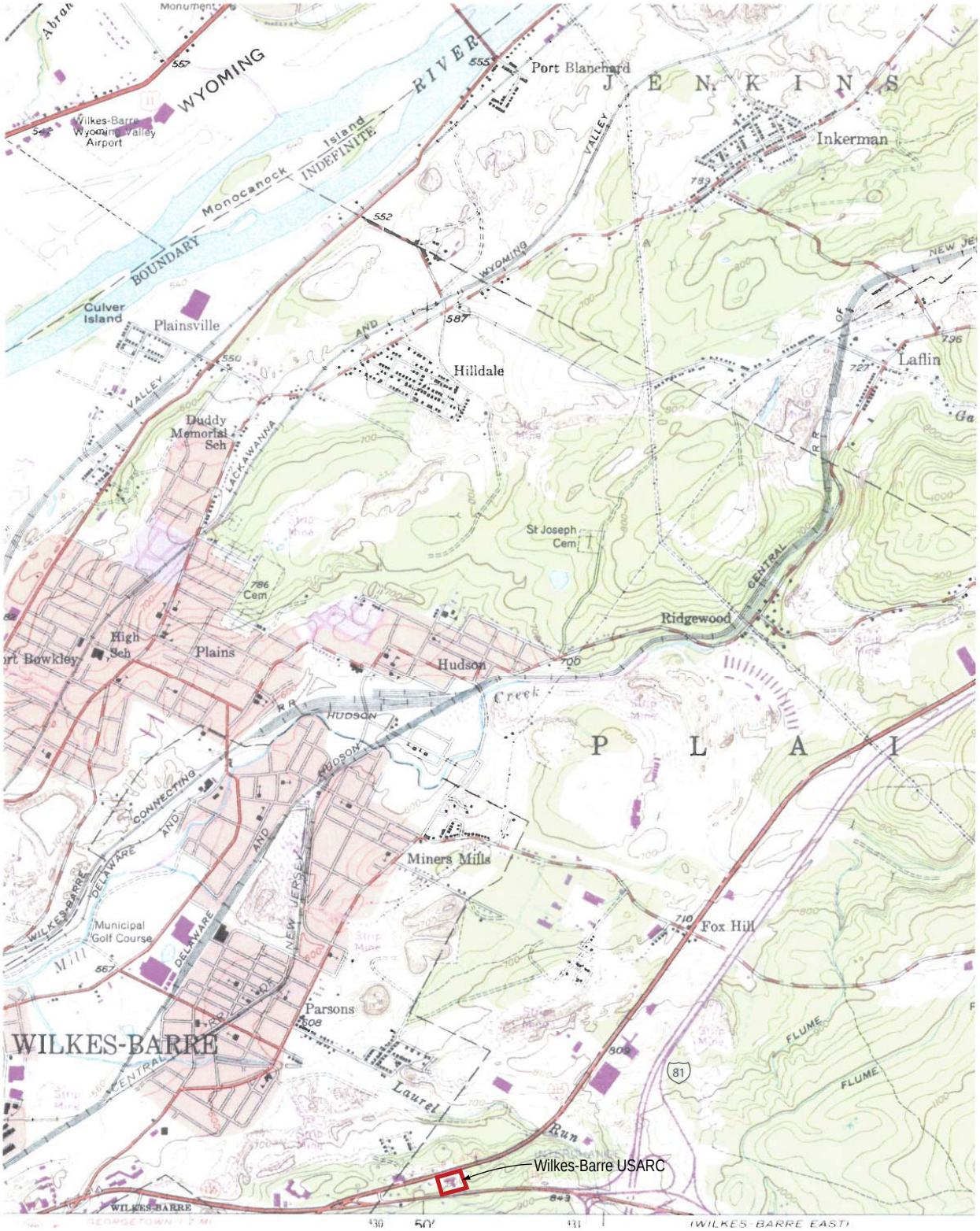

North

0 12,000 24,000

Approximate scale in feet

SOURCE: USGS 7.5' Quad: Pittston

FIGURE 4
1947-1969 USGS 7.5-Minute Topographic Map, Pittston, Pennsylvania
Phase I ECP Report

CH2MHILL

ES082006013MKE Wilkes_Barre\Figure_4_1947-1969 USGS 7.5 Topo_Pittston_v4 02-05-07 cae

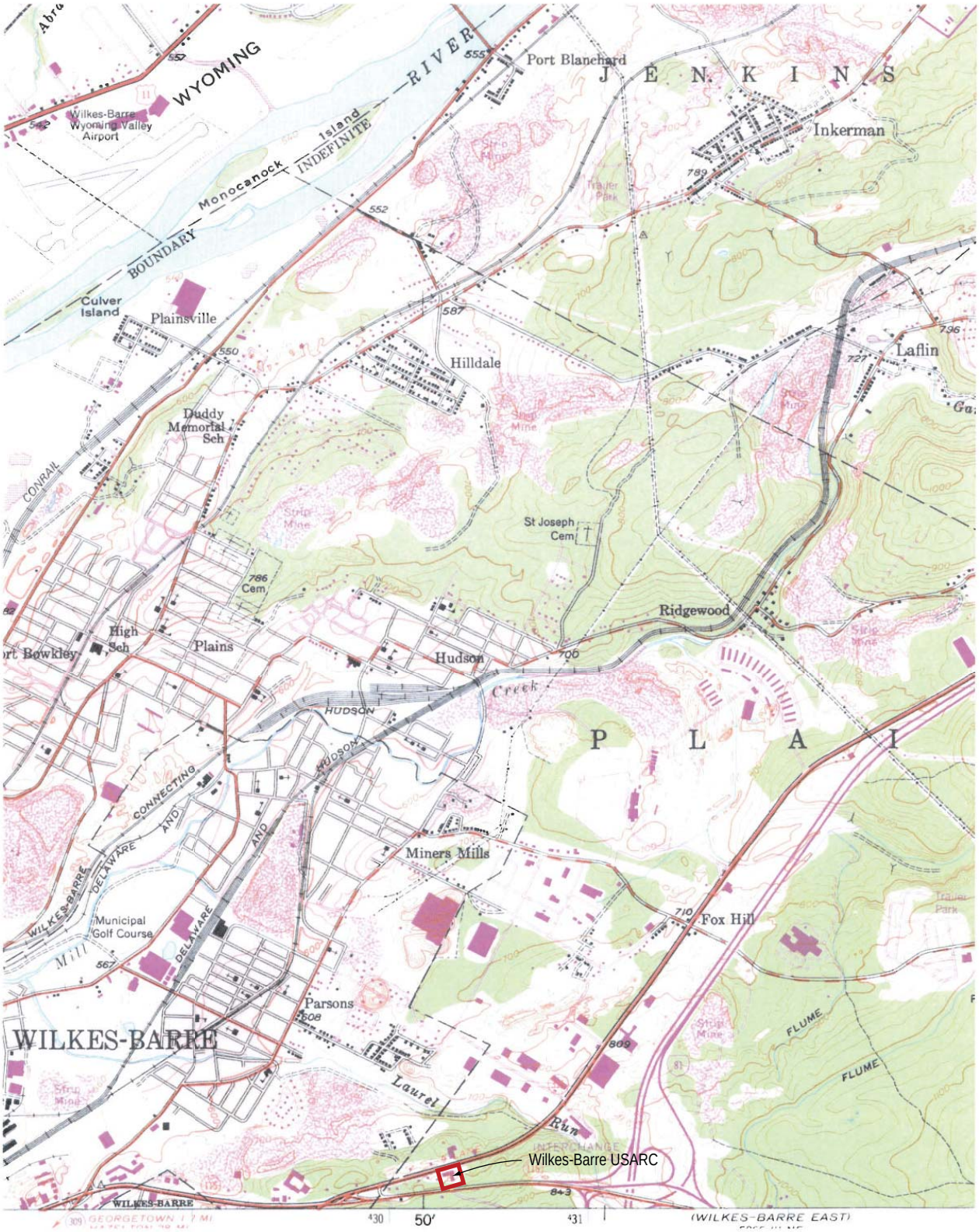

North

0 12,000 24,000

Approximate scale in feet

SOURCE: USGS 7.5' Quad: Pittston

FIGURE 5
1947-1976 USGS 7.5-Minute Topographic Map,
Pittston, Pennsylvania
Phase I ECP Report

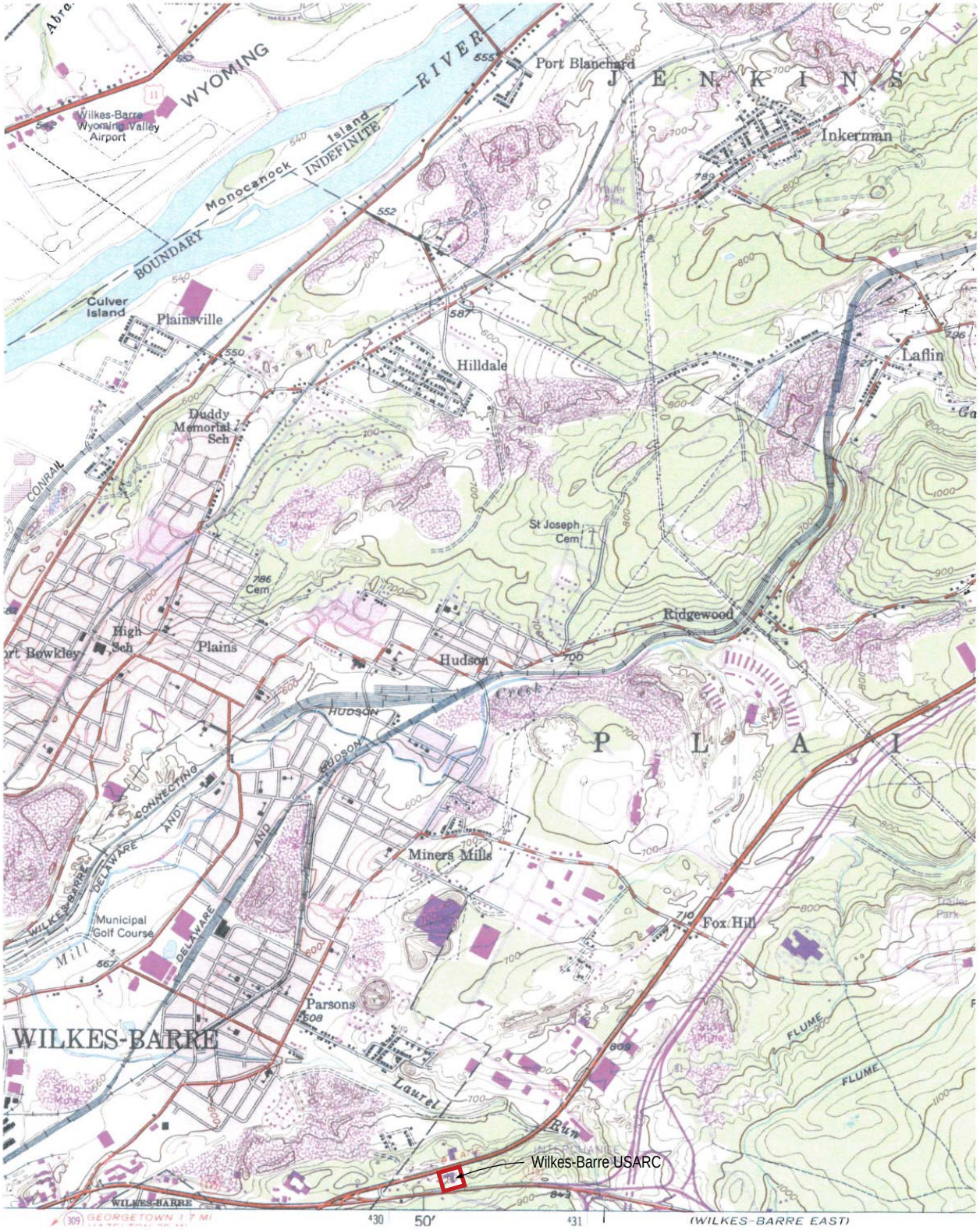

North

0 12,000 24,000

Approximate scale in feet

SOURCE: USGS 7.5' Quad: Pittston

FIGURE 6
1947-1980 USGS 7.5-Minute Topographic Map,
Pittston, Pennsylvania
Phase I ECP Report

CH2MHILL

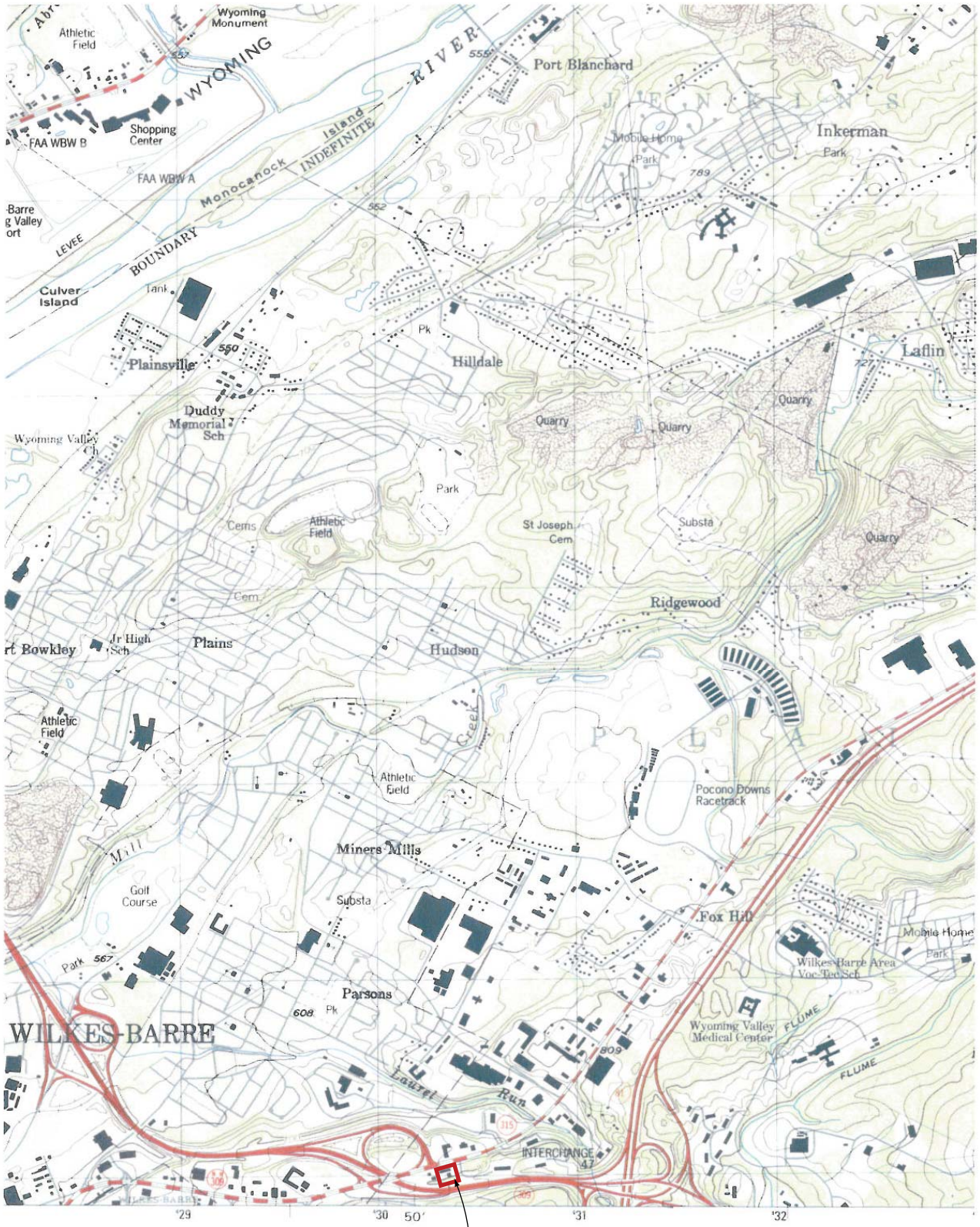

Wilkes-Barre USARC

North

0 12,000 24,000

Approximate scale in feet

SOURCE: USGS 7.5' Quad: Pittston

FIGURE 7
1999 USGS 7.5-Minute Topographic Map,
Pittston, Pennsylvania
Phase I ECP Report

North

FIGURE 8
1969 Aerial Photography
Phase I ECP Report

North

FIGURE 9
1976 Aerial Photography
Phase I ECP Report

North

FIGURE 10
1999 Aerial Photography
Phase I ECP Report

Appendix B

Site Reconnaissance Photographs

APPENDIX B

Site Reconnaissance Photographs

1. Main administration building.

2. Sump pump located in boiler room former coal storage area.

3. Three-bay Organizational Maintenance Shop (OMS) building.

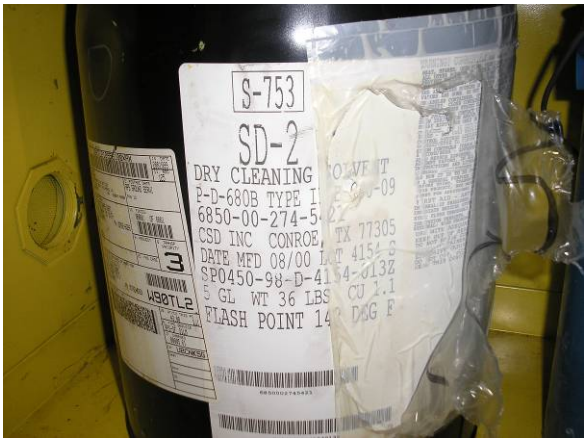

4. P-D-680B dry cleaning solvent in flammable storage cabinet in OMS building.

5. Filled in maintenance pit in OMS building.

6. Sump pump in OMS building.

7. Wash rack not in use. Dumpster placed on top to prevent use.

8. Parts washer in OMS building.

9. Diesel gas cans and batteries on floor of OMS building.

10. 9-inch by 9-inch tile located in gymnasium, suspected to be made of asbestos.

Appendix C

Property Acquisition Documents and Chain of Title Report

2055 East Rio Salado Parkway, Suite 201
Tempe, Arizona 85281
Phone: (480) 967-6752
Fax Number: (480) 966-9422
Web Site: www.netronline.com

HISTORICAL CHAIN OF TITLE REPORT

WILKES-BARRE USARC, PA
1001 HIGHWAY 315 SOUTH
WILKES-BARRE, PENNSYLVANIA

Submitted to:

ENVIRONMENTAL DATA RESOURCES, INC.
C/O
CH2M HILL
1569 Stampmill Way
Lawrenceville, Georgia 30043

Attention: Mary Jacques

Project No. N06-5606

Tuesday, February 13, 2007

NETR - Real Estate Research & Information hereby submits the following ASTM historical chain-of-title to the land described below, subject to the leases/miscellaneous shown in Section 2. Title to the estate or interest covered by this report appears to be vested in:

UNITED STATES OF AMERICA

The following is the current property legal description:

All that certain piece or parcel of land being 4 acres, more or less, of the Tracts known as A-100 and A-103, commonly known as 1001 Highway 315 South at Intersection of State Route 309 and State Route 315, situated and lying in Ward 10, in the City of Wilkes-Barre, Luzerne County, State of Pennsylvania

Assessor's Parcel Number(s): 50-C-176-D2-R10 / Map ID H10S2 / Block 001 / Lot 005

1. HISTORICAL CHAIN OF TITLE

1. DEED
   RECORDED: 07/06/1864
   GRANTOR: Calvin Parsons & Anna Parsons, his wife
   GRANTEE: Rubin J. Flick, et al
   INSTRUMENT: Book 94, Page 518

2. DECLARATION OF TAKING
   RECORDED: 07/09/1954
   GRANTOR: Clement W. Perkins, Agent for the Estate of Rubin J. Flick, et al
   GRANTEE: United States of America
   INSTRUMENT: Liber 1243, Page 450
   COMMENTS: Conveys Tract A-100

3. DECLARATION OF TAKING
   RECORDED: 03/04/1965
   GRANTOR: Clement W. Perkins, Agent for the Estate of Rubin J. Flick, et al
   GRANTEE: United States of America
   INSTRUMENT: Civil No. 8858
   COMMENTS: Conveys Tract A-103

2. LEASES AND MISCELLANEOUS

1. UNRECORDED LEASE:

DATED:	06/24/1993
LESSOR:	Commonwealth of Pennsylvania
LESSEE:	United States of America
INSTRUMENT:	DACA-31-5-93-079

2. No environmental liens were found of record

3. No institutional controls were found of record

LIMITATION

This report was prepared for the use of Environmental Data Resources, Inc., and CH2M Hill, exclusively. This report is neither a guarantee of title, a commitment to insure, or a policy of title insurance. NETR- Real Estate Research & Information does not guarantee nor include any warranty of any kind whether expressed or implied, about the validity of all information included in this report since this information is retrieved as it is recorded from the various agencies that make it available. The total liability is limited to the fee paid for this report.

USARC Wilkes-Barre, PA

IN THE
UNITED STATES DISTRICT COURT
FOR THE
MIDDLE DISTRICT OF PENNSYLVANIA

A-4044

UNITED STATES OF AMERICA, Plaintiff, vs. 3.45 Acres of Land, More or Less, in Luzerne County, Pennsylvania, and Clement W. Perkins, et al., Defendants	DECLARATION OF TAKING CIVIL NO. 4994

TO THE HONORABLE
THE UNITED STATES DISTRICT COURT:

I, Robert T. Stevens, Secretary of the Army of the United States, do hereby declare that:

1. (a) The land hereinafter described is taken under and in accordance with the Act of Congress approved February 26, 1931 (46 Stat. 1421; 40 U.S.C. 258a), and acts supplementary thereto and amendatory thereof, and under the further authority of the Act of Congress approved August 1, 1888 (25 Stat. 357; 40 U.S.C. 257); and the Act of Congress approved August 18, 1890 (26 Stat. 316), as amended by the Acts of Congress approved July 2, 1917 (40 Stat. 241) and April 11, 1918 (40 Stat. 518; 50 U.S.C. 171), which acts authorize the acquisition of land for military purposes, and the Act of Congress approved September 6, 1950 (Public Law 759 - 81st Congress), which act authorized the acquisition of the land and appropriated funds for such purposes.

(b) The public uses for which said land is taken are as follows: The said land is necessary adequately to provide for the requirements of the Department of the Army and for other military uses incident thereto. The said land has been selected by me for acquisition by the United States for use in connection with the establishment of an Army Reserve Training Center near Wilkes-Barre, in Luzerne County, Pennsylvania, and for such other uses as may be authorized by Congress or by Executive Order.

2. A general description of the land being taken is set forth in Schedule "A" attached hereto and made a part hereof, and is a description of the same land described in the complaint in the above entitled cause.

Incl 2

RECORDED

CLEARED IN FILE 12/4/02

A-100

Declaration of Taking 3.45 Acres,
Luzerne Co., Pa. and
Clement W. Perkins, et al.

3. The estate taken for said public uses is the fee simple title, subject to existing easements for public roads and highways, public utilities, railroads and pipe lines.

4. A plan showing the land taken is annexed hereto as Schedule "B" and made a part hereof.

5. The sum estimated by me to be just compensation for said land, with all buildings and improvements thereon, and all appurtenances thereto, and including any and all interests hereby taken in said land is set forth in Schedule "A" herein, which sum I cause to be deposited herewith in the Registry of said Court for the use and benefit of the persons entitled thereto. I am of the opinion that the ultimate award for said land probably will be within any limits prescribed by law on the price to be paid therefor.

IN WITNESS WHEREOF, the United States of America, by its Secretary of the Army, thereunto authorized, has caused this declaration of taking to be signed in its name by said ROBERT T. STEVENS, Secretary of the Army, this 21st day of June, 1954, in the City of Washington, District of Columbia.

/s/ Robert T. Stevens

ROBERT T. STEVENS
Secretary of the Army

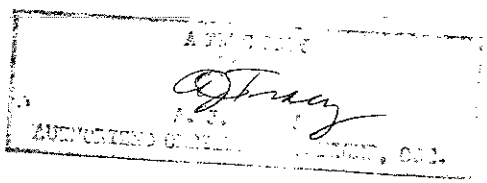

SCHEDULE "A"

The land which is the subject matter of this Declaration of Taking aggregates 3.45 acres, more or less, situate in Luzerne County, Pennsylvania. A description of the land taken, together with the names of the purported owners thereof, and a statement of the sum estimated to be just compensation therefor are as follows:

Tract No. A-100

All that parcel of land located in the Township of Plains, County of Luzerne, Commonwealth of Pennsylvania, bounded and described as follows:

> Beginning at a point in the southerly right of way line of U.S. Highway No. 315 South 23° 44' 35" East 40 feet from the centerline of said highway at Centerline Station 344+ 96.34; thence South 23° 44' 35" East 244.08 feet to a point in the northerly right of way line of U. S. Highway No. 115; thence with said right of way line North 77° 28' 52" East 518.74 feet to a point; thence North 18° 09' 35" West 327.19 feet to a point in the right of way line of the above mentioned U. S. Highway No. 315; thence along said right of way line South 68° 18' 52" West 541.01 feet to the place of beginning. Containing 3.45 acres of land, more or less.

Being a part of the same land conveyed to Rubin J. Flick, et al. by Calvin Parsons, and Anna Parsons, his wife, by deed dated 6 July 1864, and recorded among the deed records of the County and State aforesaid in Deed Book 94, at Page 518.

Names and Addresses of Purported Owners:

Clement W. Perkins, Agent for the Estate of Rubin J. Flick, et al.
253 S. Franklin St., Wilkes-Barre, Pa.
Lehigh Valley Coal Company
Wilkes-Barre, Pa.
Sullivan Trail Mining Co.
West Pittston, Pa.

Estimated Compensation: $35,000.00

The gross sum of money estimated by the acquiring agency to be just compensation for the estate hereby taken, inclusive of all rights set forth in the Declaration of Taking is Thirty Five Thousand Dollars ($35,000.00).

TR Pr 100

IN THE
UNITED STATES DISTRICT COURT
FOR THE MIDDLE DISTRICT OF PENNSYLVANIA

UNITED STATES OF AMERICA, Plaintiff,	:	
vs.	:	DECLARATION OF TAKING
0.40 ACRE OF LAND, MORE OR LESS, SITUATE IN LUZERNE COUNTY, STATE OF PENNSYLVANIA, AND CLEMENT H. MERKLE, ET AL, Defendants	:	CIVIL NO. 8858 Filed 4 mar 1963

TO THE HONORABLE,
THE UNITED STATES DISTRICT COURT:

I, Stephen Ailes Secretary of the Army of the United States, do hereby declare that:

1. (a) The land hereinafter described is taken under and in accordance with the Act of Congress approved February 26, 1931 (46 Stat. 1421, 40 U.S.C. 258a), and acts supplementary thereto and amendatory thereof, and under the further authority of the Act of Congress approved August 1, 1888 (25 Stat. 357, 40 U.S.C. 257); the Act of Congress approved August 10, 1956 (Public Law 1028 - 84th Congress, 2d Session; 10 U.S.C. 2663 and 2663(a)), which act authorizes acquisition of land for military purposes; and Section 2672 of Title 10, United States Code, which authorizes acquisition of the land, and Section 505 of the Act of Congress approved August 19, 1964 (Public Law 88 - 446) which act made funds available for such purposes.

(b) The public uses for which said land is taken are as follows: The said land is necessary adequately to provide for the establishment of additional facilities for the use of the Department of the Army and for other military uses incident thereto. The said land has been selected by me for acquisition by the United States for use in connection with the Wilkes-Barre, Pennsylvania Army Reserve Training Center in the Seventeenth

Encl 1

A 102

Ward, Plains Township, Luzerne County, Pennsylvania, and for such other uses as may be authorized by Congress or by Executive Order.

2. A general description of the land being taken is set forth in Schedule "A" attached hereto and made a part hereof, and is a description of the same land described in the complaint in the above entitled cause.

3. The estate taken for said public uses is the fee simple title subject, however, to existing easements for public roads and highways, public utilities, railroads and pipelines.

4. A plan showing the land taken is annexed hereto as Schedule "B" and made a part hereof.

5. The sum estimated by me as just compensation for said land, with all buildings and improvements thereon and all appurtenances thereto and including any and all interests hereby taken in said land, is set forth in Schedule "A" herein, which sum I cause to be deposited herewith in the registry of the said court for the use and benefit of the persons entitled thereto. I am of the opinion that the ultimate award for said land probably will be within any limits prescribed by law on the price to be paid therefor.

IN WITNESS WHEREOF, the United States of America, by its Secretary of the Army, thereunto authorized, has caused this declaration to be signed in its name, by said Stephen Ailes, Secretary of the Army, this 10th day of February, A. D. 1965, in the City of Washington, District of Columbia.

Stephen Ailes
Secretary of the Army

SCHEDULE "A"

The land which is the subject matter of this Declaration of Taking aggregates 0.40 of an acre of land, more or less, situate in Luzerne County, State of Pennsylvania. A description of the land taken, together with the names of the purported owners thereof, and a statement of the sum estimated to be just compensation therefor, are as follows:

TRACT NO. A-103

Beginning at a point on the northwest boundary line of Pennsylvania State Highway Route No. 315 (Legislative Route No. 515), said point being a common corner between lands of Clement W. Perkins and lands of Angeline Gurnari; thence from the point of beginning and binding the aforesaid Gurnari lands N 21° 41' 08" W, 150.00 feet to a point; thence leaving the aforesaid Gurnari lands and running over and across lands of Clement W. Perkins the two following courses and distances; (1) N 68° 18' 52" E, 116.00 feet, and (2) S 21° 41' 08" E, 150.00 feet to a point on the northwest boundary line of the aforesaid State Highway; thence along the northwest boundary line of the highway S 68° 18' 52" W, 116.00 feet to the point or place of beginning; containing 0.40 of an acre of land, more or less.

Purported Owners and Addresses

Clement W. Perkins & Catharine B. Perkins, h/w
Peoples' Nat'l Bank of Edwardsville
P. O. Box 1268
Kingston, Penna. 18704

Clement W. Perkins, Agent
Parsons-Flick Estate(s)
Peoples' Nat'l Bank
Narrows Shopping Center
Kingston, Penna.

Clement W. Perkins
Peoples' Nat'l Bank
Narrows Shopping Center
Kingston, Penna.
Attorney-in-Fact for Parsons-Flick Estate(s); Margaret Liddon Flick Hoffman, & Eleanor Flick Ingalls Stone, individually & as Executrix(s) & Trustees of the Estate of Henrietta Ridgley Flick, deceased; Ruth T. Cole Thomas; Mary Beale Beall, widow; Katharyne Beale Copass & Jack Malcolm Copass, h/h; William H. Beale, unmarried; Bryan H. Koetting & Lester O. Koetting, h/h; Robert H. Beale & Gloria H. Beale, h/w; Margaret Perkins Pease & Robert Morton Pease, h/h; Ruth Cole Thomas & John Thomas, h/h.

Clement W. Perkins
Administrator of the Estate of Chester Gray Beale, deceased
253 South Franklin Street
Wilkes-Barre, Penna.

Clement W. Perkins, Trustee under Declaration of Trust dated 11 April 1963
253 South Franklin Street
Wilkes-Barre, Penna.

Ruth T. Cole Thomas & John Thomas, h/h
25 Timpson Street
Ashley, Penna.

Margaret Perkins Pease & Robert Morton Pease, h/h
35 Cedar Lane
Princeton, New Jersey

Bankers Trust Company, Trustee, Estate of Reuben J. Flick, deceased
Park Avenue at 57th Street
New York, New York
ATTN: Real Estate Department

Bankers Trust Co., 2nd listing as Surviving Executor & Trustee under Will of R. Jay Flick, deceased
Park Avenue at 57th St., New York, New York ATTN: Real Estate Department

Margaret Liddon Flick Hoffman, Individually & as Executrix & Trustee of Estate of Henrietta Ridgely Flick, deceased c/o Bankers Trust Company
Park Avenue at 57th Street
New York, New York
ATTN: Real Estate Department

Eleanor Flick Ingalls Stone, Individually & as Executrix & Trustee of Estate of Henrietta Ridgely Flick, deceased c/o Bankers Trust Company, Park Ave. at 57th Street
New York, New York
ATTN: Real Estate Department

Mary Beale Beall, widow
708 State Street
Alton, Illinois

Robert H. Beale, Jr. & Gloria H., h/w
720 Gunnison Street
Grants, New Mexico

Bryan H. Koetting & Lester O. Koetting, her husband
600 W. 3rd Street
El Dorada, Kansas

Katharyne Beale Copass & Jack Malcolm Copass, her husband
1033 Mayo Blvd.
Tulsa, Oklahoma

William H. Beale, unmarried
1619 S. Utica Street
Tulsa, Oklahoma

Heirs & Devisees of Ruth A. Fish
Address Unknown

Phyllis P. Cohen, et vir.
138-22 76th Avenue
Flushing, New York

Harriet Fish Holloway, et vir.
1424 46th Street
Los Alamos, New Mexico

Anne Parsons Fish Yashvin, et vir.
c/o Hinkles
Sante Fe, New Mexico

Anne Fish Kline Yashvin
Address Unknown

Anne Parsons Fish Kline Yashvin
Address Unknown

Luzerne National Bank
Luzerne, Pennsylvania

George C. Armstrong, Executor Under Will of Helen M. Quantius, deceased
5235 Reservation Road
Drexel Hill, Penna.

Warren J. Flick
Address Unknown

Margaret S. Perkins
Address Unknown

Roland S. Bell
Address Unknown

Roland B. Bell, Administrator d.b.n.c.t.a. of Estate of Calvin Parsons, deceased
Address Unknown

Roland B. Bell and Elizabeth C. Bell, h/w
Borough of Kingston
Luzerne County, Penna.

Robert A. Fish
Address Unknown

Heirs & Devisees of R. Jay Flick, deceased
Address Unknown

Heirs & Devisees of Dixie Lee Flick, deceased
Address Unknown

Robert H. Beale & Gloria H. Beale, h/w
Address Unknown

The Wilkes-Barre Water Company
Wilkes-Barre, Penna.

Mineral Spring Coal Company
Address Unknown

Lehigh Valley Coal Company
Address Unknown

Pennsylvania Power & Light Company
Address Unknown

Lola M. Brooks
Address Unknown

Mary P. Moylan
Address Unknown

Carlos Z. Bell
Address Unknown

Esther C. Bell
Address Unknown

T. B. Maxfield
Committee of Charles C. Curtis (husband of Gertrude K. Curtis, deceased)
Ithaca, New York

Estimated Compensation: $6,000.00

The gross sum of money estimated by the acquiring agency to be just compensation for the estate hereby taken, inclusive of all rights set forth in the Declaration of Taking, is Six Thousand Dollars ($6,000.00).

file copy
sent original
to Corps for
proper distribution

DEPARTMENT OF THE ARMY
BALTIMORE DISTRICT, CORPS OF ENGINEERS
P.O. BOX 1715
BALTIMORE, MARYLAND 21203-1715

REPLY TO ATTENTION OF:

3 December 1990

Real Estate Division
Management & Disposal Branch

COMMONWEALTH OF PENNSYLVANIA
UNITED STATES ARMY RESERVE CENTER
DEPARTMENT OF TRANSPORTATION
WILKES BARRE, PA 18702

Dear Sir:

Enclosed is a fully executed copy of Department of the Army Easement No. DACA-31-2-89-250 which grants you use of Government property at USARC-Wilkes Barre, PA.

Your cooperation has been appreciated.

Sincerely,

Robert C. Webb

Robert C. Webb
Acting Chief, Management & Disposal Branch
Real Estate Division

Enclosure

DEPARTMENT OF THE ARMY
EASEMENT FOR ROAD OR STREET

NO. DACA-31-2-89-250

ON UNITED STATES ARMY RESERVE CENTER, WILKES-BARRE, PENNSYLVANIA

THE SECRETARY OF THE ARMY, under and by virtue of the authority vested in him by Title 10, United States Code, Section 2668 hereby grants to **the Commonwealth of Pennsylvania, Department of Transportation,**

RECEIVED
OCT 6 1989
OFFICE OF ATTORNEY GENERAL
CONTRACTS #

a perpetual and assignable *hereinafter designated as the grantee, an easement for a right-of-way* road or street over, across, *in, and upon lands of the United States described as follows:* portion of three tracts, the first being designated as Parcel A, being a portion of Tract A-100, containing approximately 0.18 of an acre of land, more or less, being located on the southeasterly side of Rt. 315; the second being designated as Parcel B, being a portion of Tract A-103, containing approximately 0.03 of an acre of land, more or less, being located on the northeasterly side of Rt. 315; and the third being designated as Parcel C, containing approximately 0.22 of an acre of land, more or less, located at the southerly right-of-way of Rt. 315, crossing Tract A-100, all three parcels being further described on Exhibit "A" and substantially shown in red on Exhibit "B" (COE Dwg. entitled, "USARC Wilkes Barre, PA, sheet 1 of 1, NAD 254), both exhibits being attached hereto and by this reference, made a part hereof. TOTAL 0.43 AC

~~as shown in red on Exhibit "B" attached hereto and made a part hereof.~~

THIS EASEMENT is granted subject to the following provisions and conditions:

1. The construction, use, and maintenance of said road or street, including culverts and other drainage facilities, shall be performed without cost or expense to the United States, under the general supervision and subject to the approval of the officer having immediate jurisdiction over said premises.

2. The grantee shall at all times maintain said road or street in good condition and shall promptly make all repairs thereto needed to preserve a smooth-surface highway.

3. Any property of the United States damaged or destroyed by the grantee incident to the use and occupation of the said premises shall be promptly repaired or replaced by the grantee to the satisfaction of the said officer, or in lieu of such repair or replacement the grantee shall, if so required by said officer, pay to the United States money in an amount sufficient to compensate for the loss sustained by the United States by reason of damages to or destruction of Government property.

4. The use and occupation of said lands of the United States for the purposes authorized by this instrument shall be subject to such rules and regulations as the said officer may prescribe from time to time in order to properly protect the interests of the United States.

5. The United States shall in no case be liable for any damages or injuries to the said road or street which may be caused by or result from any operations undertaken by the Government, and no claim or right to compensation shall accrue from such damages or injuries.

6. The United States reserves the right to make such connections between the road or street herein authorized and roads and streets on said lands as the Chief of Engineers may from time to time consider necessary, and also reserves to itself rights-of-way for all purposes across, over, and/or under the right-of-way hereby granted; provided, however, that such rights shall be used in a manner that will not create unnecessary interference with the use and enjoyment by the grantee of said right-of-way for highway purposes. and that any such use shall be consistent with normal rules and regulations and safety provisions concerning use of highway facilities.

7. It is to be understood that this instrument is effective only insofar as the rights of the United States in the property over which the said road or street is to be extended are concerned, and that the grantee shall obtain such permission as may be necessary on account of any other existing rights.

8. All or any part of such right-of-way herein granted may be terminated by the Secretary of the Army for failure to comply with any or all of the terms or conditions of this grant, or for nonuse for a two-year period or abandonment of rights granted herein. Prior to any final termination of rights under this grant, notice shall be given to the grantee and an opportunity to comply permitted.

9. It is understood that the provisions of Conditions Nos. 1 and 5, supra, shall not abrogate or interfere with any agreements or commitments made or entered into between the grantee and any other agency of the United States with regard to financial aid to the grantee in connection with the construction, maintenance, or repair of the road or sheet described herein.

~~10. The United States shall not be responsible for damages to property or injuries to persons which may arise from or be incident to the use and occupation of the said premises, nor for damages to the property of the grantee, or for injuries to the person of the grantee (if an individual), nor for damages to the property or injuries to the person of the grantee's officers, agents, servants, or employees, or others who may be on said premises at their invitation or the invitation of any one of them arising from or incident to governmental activities and the grantee shall hold the United States harmless from any and all such claims.~~

11. The United States shall not be responsible for damages to property or injuries to persons which may arise from or be incident to the construction, maintenance, and use of said road or street.

~~This easement is subject to the requirements of Section 2662.~~

~~IN WITNESS WHEREOF, I have hereunto set my hand this day of 19~~

DEPARTMENT OF THE ARMY
EASEMENT FOR ROAD CR[illegible]EET

NO. DACA-31-2-89-250

ON UNITED STATES ARMY RESERVE CENTER, WILKES-BARRE, PENNSYLVANIA

THE SECRETARY OF THE ARMY, under and by virtue of the authority vested in him by Title 10, United States Code, Section 2668 hereby grants to **the Commonwealth of Pennsylvania, Department of Transportation,**

a perpetual and assignable

hereinafter designated as the grantee, ~~an~~ easem[illegible] a road or street over, across, in, and upon lands of the United States de[illegible]rtion of three tracts, the first being designated as Parcel A, [illegible] Tract A-100, containing approximately 0.18 of an acre of land, more or less, being located on the southeasterly side of Rt. 315; the second being designated as Parcel B, being a portion of Tract A-103, containing approximately 0.03 of an acre of land, more or less, being located on the northeasterly side of Rt. 315; and the third being designated as Parcel C, containing approximately 0.22 of an acre of land, more or less, located at the southerly right-of-way of Rt. 315, crossing Tract A-100, all three parcels being further described on Exhibit "A" and substantially shown in red on Exhibit "B" (COE Dwg. entitled, "USARC Wilkes Barre, PA, sheet 1 of 1, NAD 254), both exhibits being attached hereto and by this reference, made a part hereof.

~~as shown and on Exhibit [illegible] attached hereto and made a part hereof.~~

THIS EASEMENT is granted subject to the following provisions and conditions:

1. The construction, use, and maintenance of said road or street, including culverts and other drainage facilities, shall be performed without cost or expense to the United States, under the general supervision and subject to the approval of the officer having immediate jurisdiction over said premises.

2. The grantee shall at all times maintain said road or street in good condition and shall promptly make all repairs thereto needed to preserve a smooth-surface highway.

3. Any property of the United States damaged or destroyed by the grantee incident to the use and occupation of the said premises shall be promptly repaired or replaced by the grantee to the satisfaction of the said officer, or in lieu of such repair or replacement the grantee shall, if so required by said officer, pay to the United States money in an amount sufficient to compensate for the loss sustained by the United States by reason of damages to or destruction of Government property.

4. The use and occupation of said lands of the United States for the purposes authorized by this instrument shall be subject to such rules and regulations as the said officer may prescribe from time to time in order to properly protect the interests of the United States.

5. The United States shall in no case be liable for any damages or injuries to the said road or street which may be caused by or result from any operations undertaken by the Government, and no claim or right to compensation shall accrue from such damages or injuries.

6. The United States reserves the right to make such connections between the road or street herein authorized and roads and streets on said lands as the Chief of Engineers may from time to time consider necessary, and also reserves to itself rights-of-way for all purposes across, over, and/or under the right-of-way hereby granted; provided, however, that such rights shall be used in a manner that will not create unnecessary interference with the use and enjoyment by the grantee of said right-of-way for highway purposes. and that any such use shall be consistent with normal rules and regulations and safety provisions concerning use of highway facilities.

7. It is to be understood that this instrument is effective only insofar as the rights of the United States in the property over which the said road or street is to be extended are concerned, and that the grantee shall obtain such permission as may be necessary on account of any other existing rights.

8. All or any part of such right-of-way herein granted may be terminated by the Secretary of the Army for failure to comply with any or all of the terms or conditions of this grant, or for nonuse for a two-year period or abandonment of rights granted herein. Prior to any final termination of rights under this grant, notice shall be given to the grantee and an opportunity to comply permitted.

9. It is understood that the provisions of Conditions Nos. 1 and 5, supra, shall not abrogate or interfere with any agreements or commitments made or entered into between the grantee and any other agency of the United States with regard to financial aid to the grantee in connection with the construction, maintenance, or repair of the road or sheet described herein.

10. The United States shall not be responsible for damages to property or injuries to persons which may arise from or be incident to the use and occupation of the said premises, nor for damages to the property of the grantee, or for injuries to the person of the grantee (if an individual), nor for damages to the property or injuries to the person of the grantee's officers, agents, servants, or employees, or others who may be on said premises at their invitation or the invitation of any one of them, arising from or incident to governmental activities, and the grantee shall hold the United States harmless from any and all such claims.

11. The United States shall not be responsible for damages to property or injuries to persons which may arise from or be incident to the construction, maintenance, and use of said road or street.

[illegible].

[illegible]
[illegible]

13. Prior to commencement of work and immediately upon completion, notice must be given to the District Engineer, U.S. Army Engineer District, P. O. Box 1715, ATTN: CENAB-RE-M, Baltimore, MD 21203-1715. Notice must be given 30 days prior to any major maintenance or future construction.

14. That this easement is granted subject to all conveyances, restrictions, licenses and easements of record over and across and affecting the area covered by the right-of-way hereby granted.

15. That the right-of-way hereby granted shall not occupy more land than is reasonably necessary for such purposes, as determined by the said officer.

16. That the grantee must provide erosion protection to the cut and fill slopes.

17. THIS DOCUMENT DOES NOT SELL, CONVEY, TRANSFER, INCLUDE OR INSURE THE TITLE TO THE COAL AND RIGHT OF SUPPORT UNDERNEATH THE SURFACE LAND DESCRIBED OR REFERRED TO HEREIN, AND THE OWNER OR OWNERS OF SUCH COAL HAVE THE COMPLETE LEGAL RIGHT TO REMOVE ALL OF SUCH COAL AND, IN THAT CONNECTION, DAMAGE MAY RESULT TO THE SURFACE OF THE LAND AND ANY HOUSE, BUILDING OR OTHER STRUCTURE ON OR IN SUCH LAND. THE INCLUSION OF THIS NOTICE DOES NOT ENLARGE, RESTRICT OR MODIFY ANY LEGAL RIGHTS OR ESTATES OTHERWISE CREATED, TRANSFERRED, EXCEPTED OR RESERVED BY THIS INSTRUMENT.

18. That the grantee hereby assumes the responsibility of contacting the installation to familiarize itself with all pertinent installation regulations. The grantee will be required to sign a statement, provided by the Installation, to indicate compliance with this condition.

19. The United States shall not be responsible for damages to properties or injuries to persons which may arise from or be incident to the use and occupation of the said premises, nor for damages to the property of the grantee nor for damages to the property or injuries to the person of the grantee's officers, agents, servants, or employees, or others who may be on said premises at their invitation or the invitation of any one of them, except to the extent, such damage or injury arises from or is incident to government activities, and the grantee,~~[subject to the limitations of Act 152, shall hold the United States harmless from any and all such claims except to the extent the same arise from or are incident to government activities]~~** DEZ

20. That the drainage easement shall be relocated at no cost to the Government. DEZ

**agrees to pay for any loss, liability or expense, including attorney's fees, which arises out of or relates to the grantee's acts or omissions with respect to its obligations hereunder, where a final determination of liability on the part of the grantee is established by a court of law or where settlement has been agreed to by the grantee. This provision shall not be construed to limit the grantee's rights, obligations, liabilities, claims or defenses which arise as a matter of law or pursuant to any other provision of this easement. This provision shall not be construed to limit the sovereign immunity of the Commonwealth of Pennsylvania or the grantee.

21. That the grantee hereby agrees to convey a leasehold interest to the United States, at no cost, for the use of a parcel of land adjacent to and to the north of the USARC, Wilkes-Barre, as generally shown in red on attached Exhibit "C". Said conveyance shall be completed after road construction by the grantee is complete and the parcel of land is graded, paved and fenced by the grantee. The grantee also agrees to convey the said parcel of land to the United States at some future time, prior to the expiration of the above mentioned lease.

Prior to execution of this instrument, Condition Nos. 6 and 8 were modified, Condition No. 10 was deleted, and Condition Nos. 13 through 21 were added on pages 3 and 4 which are hereby made a part of this easement.

This instrument is not subject to Title 10, United States Code, Section 2662.

IN WITNESS WHEREOF, I have hereunto set my hand this 18th day of December 1989 by authority of the Secretary of the Army.

G. R. Boggs
Chief, Real Estate Division

The above instrument, together with all conditions thereof, is hereby accepted this 4th day of October 1989.

PRELIMINARILY APPROVED

By Michael H. Kline
Assistant Counsel

COMMONWEALTH OF PENNSYLVANIA
DEPARTMENT OF TRANSPORTATION

BY: Dwight E. Zgurosky

TITLE: Deputy Secretary

South 21° 44' 08" East 40.00 feet to its terminus a point within said Tract A-100, containing 0.01 of an acre, more or less.

The above described parcels, in the aggregate, contain 0.22 of an acre, more or less.

The bearings used herein are referenced to the Pennsylvania State Plane Coordinate System (North Zone) 1927 N.A. Datum.

It is the intent of the foregoing description to include parts of same lands as that acquired by the United States of America for the Army Reserve Center, Wilkes-Barre, Pennsylvania.

OWNER: UNITED STATES OF AMERICA
ACRES: 0.22
PORTION OF TRACT A-100 and A-103

UNITED STATES ARMY RESERVE CENTER
WILKES-BARRE, PENNSYLVANIA
1 August 1989

ARMY RESERVE CENTER

Wilkes-Barre, Pennsylvania

Portion of Tract A-100 and A-103

(right-of-way/drainage outgrant)

Three certain parcels of land situate in the Commonwealth of Pennsylvania, Luzerne County being a portion of Tract A-100 and Tract A-103 acquired by the United States of America for the Army Reserve Center, Wilkes-Barre, Pennsylvania Military Reservation hereinafter referenced to by Tract Number being 15 feet wide, located 7.5 feet on each side of the following described centerline.

PARCEL "A"

Beginning at a point on the Project Boundary line, a line between Tract A-100 and lands now or formerly owned by Reuben J. Flick Estate, et al; thence, leaving lands of the said Flick Estate, et al and crossing said Tract A-100,

North 68° 18' 52" East passing Parcel C at approximately 455 feet in all 541.01 feet to its terminus another point on said Boundary a line between said Tract A-100 and lands of said Flick Estate, et al, **containing 0.18 of an acre, more or less.**

PARCEL "B"

Beginning at a point on the Project Boundary line, a line between Tract A-103 and lands now or formerly owned by Angeline Gurnari; thence, leaving lands of the said Gurnari and crossing said Tract 103,

North 63° 18' 52" East 116.00 feet to its terminus a point on a line between said Tract A-103 and lands now or formerly owned by Clement W. Perkins, **containing 0.03 of an acre, more or less.**

PARCEL "C"

Beginning at a point on the Project Boundary line, said point being on southerly right-of-way of of Route No. 315; thence, leaving said boundary and crossing Tract Number A-100,

EXHIBIT A

USARC
Wilkes-Barre

[illegible] DEPARTMENT OF THE ARMY [illegible]
[illegible] OFFICE OF THE CHIEF OF ENGINEERS [illegible]

LICENSE FOR INSTALLATIONS UPON RIGHT OF WAY

THIS AGREEMENT, made this 17th day of August, 19 54, by and between CITY OF WILKES-BARRE, LUZERNE COUNTY, COMMONWEALTH OF PENNSYLVANIA,

hereinafter called the "Licensor", and THE UNITED STATES OF AMERICA, hereinafter called the "Government" WITNESSETH:

THAT, for and in consideration of the sum of One Dollars ($ 1.00) and other good and valuable considerations _____, the receipt and sufficiency of which are hereby acknowledged, and in consideration of the mutual covenants, promises, and agreements herein made, the Licensor hereby grants to the Government a license to construct, operate, maintain, renew, and remove a sewer line (TYPE OF INSTALLATION) along, across, beneath, and over the right-of-way and property of the Licensor at the following location, viz:

Beginning at a point 5.00 feet south of the southerly edge of the paving of Route No. 115 at a point in the corporate line of the City of Wilkes-Barre; thence westerly 5.00 feet south of and parallel with the said southerly edge of the paving a distance of 630.00 feet to a point; thence by a line deflecting to the left, 9° 30' 215.00 feet; thence by a line again deflecting to the left 13° 30' 220.00 feet to the center of an existing sewer manhole,

in the County of Luzerne, State of Pennsylvania, as shown on attached sketch marked [illegible], for use in connection with a Department of The Army establishment known as Organized Reserve Corps Armory, and upon the following terms, provisions, and conditions:

I. All installations placed upon said right-of-way by the Government shall be and remain the property of the Government and may be removed therefrom by the Government at any time.

II. The construction, operation, maintenance, renewal, and removal of said installations shall be accomplished by the Government at its sole cost and expense and in such a manner as will at all times enable the Licensor to use the surface of the right-of-way.

III. In the event of any future alterations of the property of the Licensor or of the line or grade of the right-of-way necessitating changes in said installations, the Government will make such changes in its installations as may be necessary in connection with said alterations.

IV. The Licensor shall not be liable for damages to property or injuries to persons arising from the construction, operation, maintenance, renewal, or removal of said installations by the Government.

A-101-L

V. This agreement, [redacted] the rights and privileges herein [redacted]ed, shall be subject to cancellation or termination only by mutual agreement of the parties, or in the event the terms and conditions hereof are not fulfilled, or in the event the Government abandons the use of the premises for the purposes herein granted. In either of the latter two events, cancellation may be effected by either party hereto upon thirty (30) days' written notice to the other; and upon the expiration of said thirty (30) days after service of such notice, this agreement and the rights and privileges hereby granted, as well as the obligations hereby imposed upon the parties, shall absolutely cease and determine.

VI. The Government hereby covenants and agrees that, on or before the termination of this license, it will remove said installations and the appurtenances connected therewith from the premises of the Licensor and restore said premises to the condition existing at the time of entering upon the same under this license, reasonable and ordinary wear and tear and damages by the elements or by circumstances over which the Government has no control excepted.

VII. All expenditures to be made by the Government under the provisions of this agreement shall be subject to appropriations being available for the purpose.

VIII. No member of or delegate to Congress or resident commissioner shall be admitted to any share or part of this agreement or to any benefit to arise therefrom. Nothing, however, herein contained shall be construed to extend to any incorporated company if the agreement be for the general benefit of such corporation or company.

IN WITNESS WHEREOF, the parties hereto have caused this agreement to be properly executed by their duly authorized representatives as of the day and year first above written.

City of Wilkes-Barre

BY Oliver J. Price

Director of the Department of Streets and Public Improvements.
Title

ATTEST:

Lucius K. Eldridge
Secretary

UNITED STATES OF AMERICA

BY Frank H Thomas

FRANK H. THOMAS
Contracting Officer
Corps of Engineers
Washington District

USARC Wilkes-Barre PA

DEPARTMENT OF THE ARMY

LICENSE FOR INSTALLATIONS UPON RIGHT-OF-WAY

THIS AGREEMENT, made this 13th *day of* April, 1959, *by and between* The Commonwealth of Pennsylvania, Department of Highways.

hereinafter called the "Licensor," and the UNITED STATES OF AMERICA, hereinafter called the "Government"
WITNESSETH:

THAT, for and in consideration of the mutual covenants, promises, and agreements herein made, the Licensor hereby grants to the Government a license to construct, operate, maintain, renew and remove an 8 inch Terra Cotta sewer line, five (5) manholes, and appurtenant facilities, between points "A" and "B", and a 4-inch cast-iron sewer pipe line between Points "B" and "C",
along, across, beneath, and over the right-of-way and property of the Licensor at the following location, viz: Beginning at point "A" in the westerly boundary line of Plains Township, County of Luzerne, Pennsylvania, at a point 30 feet east of Manhole No. 4, in said sewer line as constructed, and approximately 6 feet south of the southerly edge of the existing pavement of Pennsylvania State Route No. 115, thence easterly along the said sewer line as constructed and parallel with the southerly edge of the pavement of said State Route No. 115, a distance of approximately 1,254 feet to Manhole No. 9 at point "B", thence at right angles (with a 4-inch cast-iron pipe) northerly across State Route No. 115, a distance of approximately 72 feet to point "C" in the northerly right of way boundary line of State Route No. 115, which is the southerly boundary of the United States, as shown outlined in red on attached drawing.

in the County of Luzerne, *State of* Pennsylvania *as shown on the attached map marked* Exhibit "A", *for use in connection with a Department of the Army establishment known as* the U. S. Army Reserve Center, Wilkes-Barre, Pennsylvania, *and upon the following terms, provisions, and conditions:*

1. All installations placed upon said right-of-way by the Government shall be and remain the property of the Government and may be removed therefrom by the Government at any time.

2. The construction, operation and maintenance, renewal, and removal of the said installation shall be accomplished by the Government at its sole cost and expense and in such manner as will at all times enable the Licensor to use the surface of the right-of-way.

3. In the event of any future alterations of the property of the Licensor or of the line or grade of the right-of-way necessitating changes in said installations, the Government will make such changes in its installations as may be necessary in connection with such alterations.

4. The Licensor shall not be liable for damages to property or injuries to persons arising from the construction, operation, maintenance, renewal, or removal of said installations by the Government.

5. This agreement, with the rights and privileges granted herein, shall be subject to cancellation or termination only by mutual agreement of the parties, or in the event the terms and conditions hereof are not fulfilled, or in the event the Government abandons the use of the premises for the purposes granted. In either of the latter two events, cancellation may be effected by either party hereto upon thirty (30) days written notice to the other; and upon expiration of the said thirty (30) days after service of such notice, this agreement and the rights and privileges hereby granted, as well as the obligations hereby imposed upon the parties, shall absolutely cease and terminate.

6. The Government covenants and agrees that, on or before the termination of this license, it will remove said installations and the appurtenances connected therewith from the premises of the Licensor and restore said premises to the condition existing at the time of entering upon the same under this license, reasonable and ordinary wear and tear and damages by the elements or by circumstances over which the Government has no control excepted.

7. All expenditures to be made by the Government under the provisions of this agreement shall be subject to appropriations being available for the purpose.

IN WITNESS WHEREOF, the parties hereto have caused this agreement to be executed by their duly authorized representatives as of the day and year first above written.

FOR THE LICENSOR:

Pennsylvania Department of Highways
(Firm or corporate name)

R. J. Tait
(Name of official)

Superintendent of Permits
(Title)

FOR THE UNITED STATES OF AMERICA:

Owen S. Livsie
(Name of official)

(Title)

OWEN S. LIVSIE
Contracting Officer
U.S. Army Engineer District
Washington, D.C.

U. S. GOVERNMENT PRINTING OFFICE : 1958—O—490830

Lessor's Federal I.D. No. 236003105 Agreement No. DACA-31-5-93-079

Lessor Agreement No. 040846

LEASE

THIS LEASE, made on June 24, 1993, by and between the Commonwealth of Pennsylvania, acting through the Department of Transportation, hereinafter called the "LESSOR".

and

THE UNITED STATES OF AMERICA, hereinafter called the "LESSEE".

WITNESSETH:

WHEREAS, the LESSOR is the owner of fee title to certain property designated as the legal Right-of-Way for S.R. 0315, in Luzerne County, Pennsylvania; and

WHEREAS, the LESSEE has made application to the LESSOR pursuant to the provisions of 71 P.S. 512(c) to lease a certain area (hereinafter premises) within the right-of-way of S.R. 0315, which is not required for the free movement of traffic, and is identified on a plan thereof attached hereto as Exhibit "A"; and

WHEREAS, no part of the premises covered by this lease constitutes a recreation area, wildlife and/or waterfowl refuge, historic site, State forest land, State game land, wilderness area or public park which would require the Lessor to comply with the provisions of 71 P.S. 512(a)(15) or the provisions of 23 U.S.C. 138; and

WHEREAS, the LESSOR is willing to approve the LESSEE's application for the present lease pursuant to the provisions of 67 PA. Code, Chapter 495, entitled "Leasing of Real Property", with the premises to be improved at the LESSEE's cost and expense.

NOW THEREFORE, with the intention of being legally bound, the parties hereto agree, as follows:

1. The LESSOR pursuant to the authority contained in 71 P.S. 512(c), does hereby lease to the LESSEE the area (premises) within the Commonwealth's right-of-way for S.R. 0315, in Luzerne County, Pennsylvania, identified on the plan attached as EXHIBIT "A", and the metes and bounds description attached as EXHIBIT "B", both made a part hereof by reference.

2. Subject to the LESSOR's right of termination as hereinafter provided, the term of this Lease shall be fifty (50) years, commencing on the date first above written, and ending on its 50th anniversary date. If the premises or any portion thereof is needed for transportation purposes, this Lease can be terminated by LESSOR upon thirty (30) days written notice given to the LESSEE.

3. The LESSEE shall pay the LESSOR rent at the rate of ONE DOLLAR AND 00/100 ($1.00) for the entire term of the lease, the receipt and sufficiency of which are hereby acknowledged. The LESSOR has agreed to lease these premises to the LESSEE for this rental in consideration of the parcel outgranted to LESSOR for the widening of S.R. 0315.

4. The premises shall be used during the term of the Lease for Government purposes. The premises shall be used in such a manner as not to interfere in any way with the safe use of adjacent highways and lands, or in such a manner as to expose any member of the public to hazardous or unsafe conditions.

5. The LESSEE shall not permit installation, or operate on the premises, a gasoline supply stations; nor shall vehicles used or designed for the transportation of gasoline or petroleum products be permitted on the premises.

6. The premises shall not be used for the manufacture or storage of flammable, explosive or hazardous material or for any occupation which is reasonably deemed by the LESSOR to be a hazard to highway or non-highway users.

7. Any improvements desired to be placed on, in or upon the premises by the LESSEE in order to enhance its use for the purposes described in Paragraph 4 must be fire-resistant in accordance with the provisions of local applicable building codes and shall be made at the sole expense of the LESSEE. No improvements shall be placed on, in or upon the premises and no alterations shall be made on, in or upon the premises without prior written consent and approval of the LESSOR, which approval shall not be unreasonably withheld.

8. The LESSEE will, at its own cost and expense, pay for (a) all taxes and assessments that may be legally assessed on the LESSEE's possessory interest, or on any improvement or equipment placed by the LESSEE on said premises during the continuance of the term of this Lease, and (b) all charges for water, electricity or other utility services, if any, furnished to the herein described premises. Any meter for water, electricity or other utility services shall be contracted for by the LESSEE.

9. No vending of any kid or character shall be conducted, permitted or allowed upon the premises.

10. The LESSEE shall not permit any illegal activity upon the premises and shall insure that all persons authorized to use the same comply with all statutes, laws, regulations, rules, and ordinances of Federal, State, and local government.

11. The LESSEE will be permitted to erect only such directional operation, or other signs as may be required or approved by the LESSOR. No signs shall be attached to or painted on elevated structures of the highway.

12. The LESSEE, at its sole cost and expense, shall keep and maintain the premises, including all driveways, fences, and guide rails heretofore or hereafter erected. The premises shall be kept free of all tall grass, weeds, debris, and flammable materials of every description (other than materials in and necessary for the operation of parked vehicles), and at al times in an orderly, clean, safe, and sanitary condition. A high standard of cleanliness, consistent with the location of the area as an adjunct of the Commonwealth of Pennsylvania Highway System, will be required. The LESSEE understands and agrees that the LESSOR has no obligation to make repairs, alterations or provide any maintenance whatsoever to the premises.

13. The LESSEE shall, at its cost and expense, secure all necessary permits required in connection with operations on the premises and shall comply with all Federal, State, and local statutes, laws, ordinances, rules or regulations which may affect, in any respect, the LESSEE's use of the premises.

14. The LESSEE shall at its cost and expense acquire occupancy permits and install and maintain such highway entrances as may be required by its use of said premises, subject to prior approval of the LESSOR. The LESSEE shall take all steps necessary to effectively protect all fences and guide rails from damage incident to the LESSEE's use of the premises, all without expense to the LESSOR. The LESSEE shall be liable to the LESSOR and shall reimburse the LESSOR for any damage to LESSOR-owned fences, guide rails, piers, or columns in any way resulting from or attributable to the use and occupancy of the premises by the LESSEE, expressed or implied, except when caused by the fault or negligence or willful misconduct of the LESSOR, its agents, contractors, or employees. Proposed plans for driveways, fence openings, wheel rails, guide rails, surfacing and lighting other than that approved by Pennsylvania Department of Transportation shall not be implemented without the prior written consent and approval of the LESSOR. Approval of plans and specifications under this Lease is not intended to negate the need to obtain all other necessary permit or approvals which approval shall not be unreasonably withheld.

15. Limited access designations, if any, through or around the premises shall remain, as such, subject only to the terms of this lease provision and applicable law. Access to an from the premises is confined to those access points shown on the site plans attached hereto, unless otherwise approved by LESSOR in advance and in writing. Right-of-way fencing, if any, must be relocated to the line separating the premises from the limited access area still to be utilized for the free movement of traffic, all at the sole cost and expense of the LESSEE. In no event may access be gained to or from the premises via the limited access highway area still to be utilized for the free movement of traffic.

16. Without prejudice to any other rights the LESSOR may have, the Government is responsible, in accordance with applicable law, for the acts and omissions of its employees and agents which cause injuries to persons or damages to property, including any claims arising from such injuries or damages, caused by or arising from the inspections or removal actions, unless such injuries or losses are caused by the LESSOR's negligence. The Government represents that funds have generally been available for such purposes and that it will seek on an annual basis from Congress such funds as may be required for these purposes.

17. In the event of contamination, or of a condition that could give rise to contamination, it is expressly understood and agreed that the LESSOR does not assume or agree to be responsible for, and the LESSEE hereby agrees to indemnify and hold the LESSOR harmless from and against any and all claims, obligations and liabilities and all costs, expenses and attorneys' fees incurred, based upon or arising out of any obligation, liability, loss, damaged or expense of whatever kind or nature, contingent or otherwise, known or unknown, incurred under, or imposed by, any provision of federal, state or local law or regulation, or common law, pertaining to health, safety or environmental protection and arising out of any act or omission by the LESSEE, including without limitation such laws or regulations pertaining to the storage, transportation, handling, disposal, discharge, presence or use of hazardous substances. It is understood and agreed that the obligation to indemnify and hold harmless shall be a continuing obligation not subject to any limitation set forth in this Lease. "Contamination" means the uncontained presence of hazardous substances at the premises, or arising from the premises, which may required remediation under any applicable federal, state, or local law or regulation, or common laws. "Hazardous substance" means any substance defined in 41 U.S.C. 4601(14) and petroleum as defined in 42 U.S.C. 6991( ).

18. Except as set forth herein, the LESSEE shall not sublet, transfer, assign or mortgage this Lease or any part thereof without the prior written consent of the LESSOR.

19. The LESSOR specifically reserves the right of entry by any authorized officer, engineer, employee, contractor, or agent of the Commonwealth for the purpose of inspecting the premises, or the doing of any and all acts necessary or proper on the premises in connection with the inspection, protection, maintenance, painting, reconstruction and operation of any adjacent highways, highway structures and related appurtenances.

20. The LESSOR covenants and agrees with the LESSEE that the LESSEE, keeping and performing the covenants and agreements herein contained on the part of the LESSEE to be kept and performed, shall at all times during the term of this Lease peaceably and quietly have, hold and enjoy the premises, without suit, trouble, or hindrance from the LESSOR; provided, however, that if the LESSEE shall not perform an fulfill each and every one of the conditions and covenants herein contained to be performed by the LESSEE, said act or acts or omission or commission may, at the option of the LESSOR, constitute a forfeiture of all rights under this Lease.

Upon written notice of forfeiture, the LESSEE shall have thirty (30) days to cure the default or, in the case of default not reasonably susceptible of being cured within 30 days, shall have 30 days to demonstrate a diligent attempt to prosecute the cure to completion. If the LESSEE does not cure or diligently prosecute to cure, as applicable, the problem within 30 days of notice hereunder, the Lease is terminated.

21. In the event this Lease is terminated by LESSOR for any reason, the LESSEE will peaceably and quietly leave, surrender, and yield up to the LESSOR al premises in safe and good order.

22. In the event this Lease is terminated by the LESSOR, notice shall be served upon the LESSEE at U.S. Army Corps of Engineers, ATTN: CENAB-RE-MP, P.O. Box 1715, Baltimore, Maryland 21203-1715. In the event of termination by the LESSEE, said notice shall be served upon the LESSOR, care of the Commonwealth of Pennsylvania, Department of Transportation, Right-of-Way and Utility Division, Harrisburg, Pennsylvania 17120.

23. The terms and provisions of this Lease shall extend to, and be binding upon and inure to the benefit of any successor or assignee of the LESSEE or LESSOR.

24. The LESSEE, for itself, its successors in interest, and assigns, as a part of the consideration hereof, does hereby covenant and agree to abide by the nondiscrimination and equal opportunity requirements set forth by the Commonwealth of Pennsylvania attached hereto and incorporated herein by reference. In addition, the following will be adhered to: 24(a) & (b).

25. The LESSEE, for itself, its successors in interest, and assigns, as a part of the consideration hereof, does hereby covenant and agree to abide by the Commonwealth's contractor integrity provisions attached hereto Exhibit "C" and incorporated herein by reference.

26. When appropriate, it is understood that approvals by the LESSOR under this Lease are subject to the approval of the Federal Highway Administration.

27. Where there is no applicable Federal law and the Federal law has not preempted or is not in conflict with State law, the laws of the Commonwealth of Pennsylvania shall be followed in governing and construing this Lease.

28. This Lease sets forth all the promises, agreements, conditions, and understandings between the LESSOR and the LESSEE relating to this matter. There are no promises, agreements, conditions or understandings, either oral or written, between the LESSOR and the LESSEE other than those set forth in the Lease.

29. If any term, covenant or condition of this Lease, or the application thereof to any party or circumstance, is held to be invalid or unenforceable, the remainder of this Lease, or the application of such term, covenant or condition to parties or circumstances other than those to which the Lease was held invalid or unenforceable, shall not be affected by the holding of invalidity or unenforceability. Each remaining term, covenant or condition of this Lease shall be valid and be enforced to the fullest extent permitted by law.

30. Any agreement, covenant or condition set forth in this Lease which, by its nature, would reasonably be expected to be performed after the expiration or earlier termination of this Lease shall survive and be enforceable after the expiration or earlier termination of this Lease. Any and all liabilities, actual or contingent, which shall have arisen in connection with this Lease, shall survive any termination of this Lease.

31. Performance of all of the terms, covenants and conditions of this Lease shall be independent of the performance of all and every other term, covenant and condition of this Lease.

32. No obligation of any party under this Lease shall be deemed waived, and no breach excused unless such waiver or consent shall be in writing and signed by the authorized official. Any consent to, or waiver of, a breach under this Lease, whether express or implied, shall not constitute a consent to, waiver of, or excuse for, any other different or subsequent breach.

33. The rights and remedies provided by this Lease are cumulative,and the use or non-use of any one right of remedy by either party shall not preclude or waive its right to use any or all other remedies. Said rights and remedies are given in addition to any other rights the parties may have by law, statute, ordinance or otherwise.

34. The LESSEE has had the opportunity to inspect the premises and agrees to accept them in their present state and condition.

IN WITNESS WHEREOF, the parties hereto have caused these presents to be signed and delivered by their proper officials, pursuant to due and legal action authorizing the same to be done.

ATTEST:

Helen F Kuerr
(SEAL)

COMMONWEALTH OF PENNSYLVANIA
DEPARTMENT OF TRANSPORTATION

By: William Moye
Deputy Secretary of Transportation

ATTEST:

(SEAL)

By: James S. Tenkel
for G. R. BOGGS
Chief, Real Estate Division

Preliminarily Approved

By: [illegible] 4/2/93
Assistant Counsel Date
Chief

APPROVED AS TO LEGALITY AND FORM

[illegible] 6/1/93
for Chief Counsel Date

Deputy Attorney General Date

RECORDED NO. 040540
Certified Funds Available Under Activity Program

SYMBOL

AMOUNT

BY David C Boone 6/23/93
Date

APPROVED FOR
OFFICE OF THE BUDGET

BY Timothy A. [illegible] 6/23/93
Date

DISTRICT	COUNTY	ROUTE	SECTION
4-0	LUZERNE	0309	3
	CITY OF WILKES BARRE		
SUPERIOR NUMBER	REFERENCE		

SURVEY BY: JOHN W. FORTUNA & CORPS
DATE: AUGUST 8,9,10, 1989

MAP OF PENN DOT LANDS

SR309 & 315
WILKES-BARRE/PLAINS TWP.
LUZERNE COUNTY
U.S. ARMY/PENNDOT LEASE

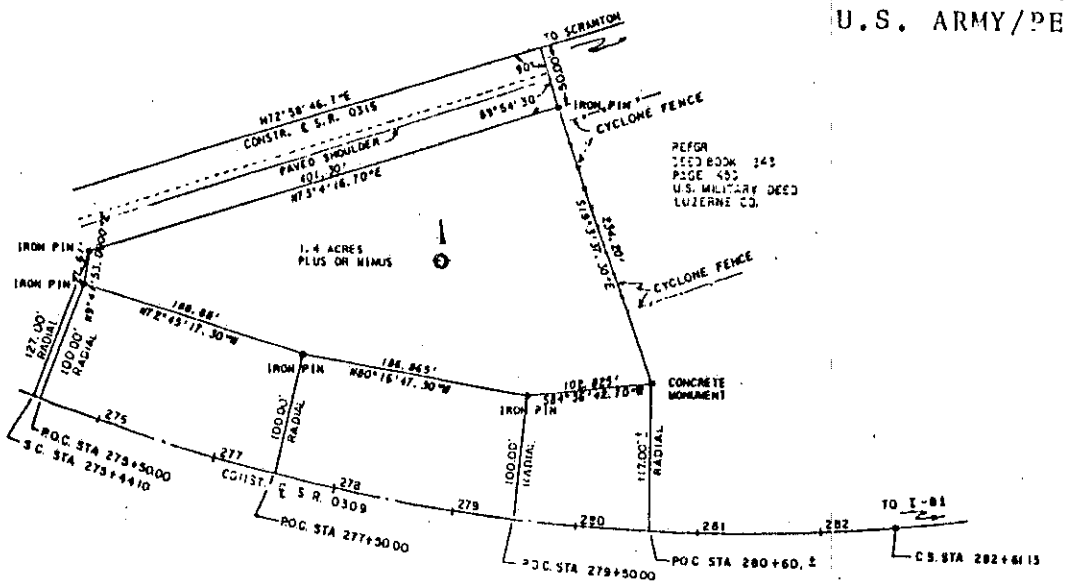

SCALE
0' 50' 100'

SURVEY BOOK # 28640

EXHIBIT B

SR309 & 315
WILKES-BARRE/PLAINS TWP.
LUZERNE COUNTY
U.S.ARMY LEASE

DEED DESCRIPTION

At intersection of State Route 0309 with State Route 0315, Township of Plains, City of Wilkes-Barre, Luzerne County.

Beginning at a concrete monument corner on the northerly right of way line of State Route 0309, said corner being the Common Corner of land of the United States of America and Land of Pennsylvania Department of Transportation, thence, south eighty-four degrees thirty-six minutes forty-two, and seven-tenths seconds west (S84° 36' 42.7W) a distance of one hundred two and eight-three hundredths (102.83) feet to an Iron Pin corner on said right of way. Thence north eighty degrees sixteen minutes forty-seven and three-tenths seconds west (N80° 16' 47.3"W) a distance of one hundred eighty six and eighty seven hundredths (186.87) feet to an Iron Pin Corner on said right of way. Thence north seventy-two degrees forty-five minutes seventeen and three-tenths seconds west (N 72° 45' 17.3"W) a distance of one hundred eighty six and eighty eight hundredths (186.88') feet to an Iron Pin Corner on said right of way. Thence north nine degrees forty-one minutes fifty-three seconds east (N9° 41' 53 E) a distance of twenty seven and sixty-one-hundredths (27.61) feet to an Iron Pin Corner. Thence along the right of way line of State Route 0315 north seventy three degrees four minutes sixteen and seven-tenths seconds east (N 73° 04' 16.7"E) a distance of four hundred one and thirty-hundredths (401.30) feet to an Iron Pin Corner, said corner is fifty (50.0) feet from construction centerline of State Route 0315. Thence along the division line of land of the United States of America and Land of Pennsylvania Department of Transportation south nineteen degrees three minutes thirty-seven and three-tenths seconds east (S19° 03' 37.3) a distance of two hundred thirty-four and twenty hundredths (234.20) feet to a concrete monument corner, the place of beginning. Containing 1.4 acres, more or less.

Comprising a portion of land bounded on the north by State Route 0315. Bounded on the south by State Route 0309. Bounded on the east by land of United States of America. Bounded on the west by the intersection of State Route 0315 with State Route 0309. As shown on Map of PennDOT Lands surveyed August 1989.

COMMONWEALTH OF PENNSYLVANIA
OFFICE OF GENERAL COUNSEL
June 23, 1993

SUBJECT: Lease Agreement between Pennsylvania Department of Transportation and United States of America (Contract #040846)

TO: William J. Cressler, Assistant Chief Counsel
Real Property Division
Department of Transportation

FROM: Joseph R. Thomas, Deputy General Counsel
Office of General Counsel

Joseph R. Thomas

This will confirm that the Office of General Counsel has authorized waiver of the American's with Disabilities Act (ADA) standard contract provisions, required by Management Directive 215.12, for the above-referenced lease agreement.

CONTRACTOR INTEGRITY PROVISIONS

1. Definitions.

a. Confidential Information means information that is not public knowledge, or available to the public on request, disclosure of which would give an unfair, unethical, or illegal advantage to another desiring to contract with the Commonwealth.

b. Consent means written permission signed by a duly authorized officer or employe of the Commonwealth, provided that where the material facts have been disclosed, in writing, by prequalification, bid, proposal, or contractual terms, the Commonwealth shall be deemed to have consented by virtue of execution of this agreement.

c. Contractor means the individual or entity that has entered into this agreement with the Commonwealth, including directors, officers, partners, managers, key employes, and owners of more than a five percent interest.

d. Financial Interest means:

(1) Ownership of more than a five percent interest in any business; or

(2) holding a position as an officer, director, trustee, partner, employe, or the like, or holding any position of management.

e. Gratuity means any payment of more than nominal monetary value in the form of cash, travel, entertainment, gifts, meals, lodging, loans, subscriptions, advances, deposits of money, services, employment, or contracts of any kind.

2. The contractor shall maintain the highest standards of integrity in the performance of this agreement and shall take no action in violation of state or federal laws, regulations, or other requirements that govern contracting with the Commonwealth.

3. The contractor shall not disclose to others any confidential information gained by virtue of this agreement.

4. The contractor shall not, in connection with this or any other agreement with the Commonwealth, directly or indirectly, offer, confer, or agree to confer any pecuniary benefit on anyone as consideration for the decision, opinion, recommendation, vote, other exercise of discretion, or violation of a known legal duty by any officer or employe of the Commonwealth.

5. The contractor shall not, in connection with this or any other agreement with the Commonwealth, directly or indirectly, offer, give, or agree or promise to give to anyone any gratuity for the benefit of or at the direction or request of any officer or employe of the Commonwealth.

6. Except with the consent of the Commonwealth, neither the contractor nor anyone in privity with him or her shall accept or agree to accept from, or give or agree to give to, any person, any gratuity from any person in connection with the performance of work under this agreement except as provided therein.

7. Except with the consent of the Commonwealth, the contractor shall not have a financial interest in any other contractor, subcontractor, or supplier providing services, labor, or material on this project.

8. The contractor, upon being informed that any violation of these provisions has occurred or may occur, shall immediately notify the Commonwealth in writing.

9. The contractor, by execution of this agreement and by the submission of any bills or invoices for payment pursuant thereto, certifies and represents that he or she has not violated any of these provisions.

10. The contractor, upon the inquiry or request of the Inspector General of the Commonwealth or any of that official's agents or representatives, shall provide, or if appropriate, make promptly available for inspection or copying, any information of any type or form deemed relevant by the Inspector General to the contractor's integrity or responsibility, as those terms are defined by the Commonwealth's statutes, regulations, or management directives. Such information may include, but shall not be limited to, the contractor's business or financial records, documents or files of any type or form which refer to or concern this agreement. Such information shall be retained by the contractor for a period of three years beyond the termination of the contract unless otherwise provided by law.

11. For violation of any of the above provisions, the Commonwealth may terminate this and any other agreement with the contractor, claim liquidated damages in an amount equal to the value of anything received in breach of these provisions, claim damages for all expenses incurred in obtaining another contractor to complete performance hereunder, and debar and suspend the contractor from doing business with the Commonwealth. These rights and remedies are cumulative, and the use or nonuse of any one shall not preclude the use of all or any other. These rights and remedies are in addition to those the Commonwealth may have under law, statute, regulation, or otherwise.

FEDERAL NONDISCRIMINATION AND EQUAL EMPLOYMENT OPPORTUNITY CLAUSES
(All Federal Aid Contracts) *

1. Selection of Labor:

During the performance of this contract, the contractor shall not discriminate against labor from any other State, possession or territory of the United States.

2. Employment Practices:

During the performance of this contract, the contractor agrees as follows:

a. The contractor will not discriminate against any employee or applicant for employment because of race, color, religion, sex, or national origin. The contract will take affirmative action to ensure that applicants are employed, and that employees are treated during employment without regard to their race, color, religion, sex, or national origin. Such action shall include, but not be limited to the following: employment, upgrading, demotion or transfer; recruitment or recruitment advertising; layoffs or termination; rates of pay or other forms of compensation; and selection for training, including apprenticeship. The contractor agrees to post in conspicuous places, available to employees and applicants for employment, notices to be provided by the State highway department setting forth the provisions of this nondiscrimination clause.

b. The contractor will, in all solicitations or advertisements for employees placed by or on behalf of the contractor, state that all qualified applicants will receive consideration for employment without regard to race, color, religion, sex, or national origin.

c. The contractor will send to each labor union or representative of workers with which he has a collective bargaining agreement or other contract or understanding, a notice to be provided by the State highway department advising the said labor union or workers' representative of the contractors commitments under section 2 and shall post copies of the notice in conspicuous places available to employees and applicants for employment.

d. The contractor will comply with all provisions of Executive Order 11246 of September 24, 1965, and of the rules, regulations (41 CFR, Part 60) and relevant orders of the Secretary of Labor.

e. The contractor will furnish all information and reports required by Executive Order 11246 of September 24, 1965, and by rules, regulations and orders of the Secretary of Labor, or pursuant thereto, and will permit access to his books, records and accounts by the Federal Highway Administration and the Secretary of Labor for purposes of investigation to ascertain compliance with such rules, regulations and orders.

f. In the event of the contractor's noncompliance with the nondiscrimination clauses of this contract or with any of the said rules, regulations or orders, this contract may be canceled, terminated or suspended in whole or part and the contractor may be declared ineligible for further Government contracts or Federally-assisted construction contracts in accordance with procedures authorized in Executive Order 11246 of September 24, 1965, and such other sanctions may be imposed and remedies invoked as provided in Executive Order 11246 of September 24, 1965, or by rule, regulation or order of the Secretary of Labor, or as otherwise provided by law.

g. The contractor will include the provisions of Section 2 in every subcontract or purchase order unless exempted by rules, regulations or orders of the Secretary of Labor issued pursuant to section 204 of Executive Order 11246 of September 24, 1965, so that such provisions will be binding upon each subcontractor or vendor. The contractor will take such action with respect to any subcontract or purchase order as the State highway department or the Federal Highway Administration may direct as a means of enforcing such provisions including sanctions for noncompliance: *Provided, however,* that in the event a contractor becomes involved in, or in threatened with litigation with a subcontractor or vendor as a result of such direction by the Federal Highway Administration, the contractor may request the United States to enter into such litigation to protect the interests of the United States.

3. Selection of Subcontractors, Procurement of Materials, and Leasing of Equipment:

During the performance of this contract, the contractor, for itself, its assignees and successors in interest (hereinafter referred to as the "contractor") agrees as follows:

a. Compliance With Regulations: The contractor shall comply with the Regulations relative to nondiscrimination in federally-assisted programs of the Department of Transportation, Title 49, Code of Federal Regulations, Part 21, as they may be amended from time to time, (hereinafter referred to as the Regulations) which are herein incorporated by reference and made a part of this contract.

b. Nondiscrimination: The contractor, with regard to the work performed by it during the contract, shall not discriminate on the grounds of race, color, sex or national origin in the selection and retention of subcontractors, including procurements of materials and leases of equipment. The contractor shall not participate either directly or indirectly in the discrimination prohibited by section 21.5 of the Regulations, including employment

**Not to be used if otherwise included in Construction or Appalachian Contract Provisions.*

(over)

CC-4297A (4-84)

COMMONWEALTH NONDISCRIMINATION CLAUSE
(All Contracts)

During the term of this contract, Contractor agrees as follows:

1. Contractor shall not discriminate against any employe, applicant for employment, independent contractor, or any other person because of race, color, religious creed, ancestry, national origin, age, or sex. Contractor shall take affirmative action to insure that applicants are employed, and that employes or agents are treated during employment, without regard to their race, color, religious creed, ancestry, national origin, age, or sex. Such affirmative action shall include, but is not limited to: employment, upgrading, demotion or transfer, recruitment or recruitment advertising; layoff or termination; rates of pay or other forms of compensation; and selection for training. Contractor shall post in conspicuous places, available to employes, agents, applicants for employment, and other persons, a notice to be provided by the contracting agency setting forth the provisions of this nondiscrimination clause.

2. Contractor shall, in advertisements or requests for employment placed by it or on its behalf, state that all qualified applicants will receive consideration for employment without regard to race, color, religious creed, ancestry, national origin, age, or sex.

3. Contractor shall send each labor union or workers' representative with which it has a collective bargaining agreement or other contract or understanding, a notice advising said labor union or workers' representative of its commitment to this nondiscrimination clause. Similar notice shall be sent to every other source of recruitment regularly utilized by Contractor.

4. It shall be no defense to a finding of noncompliance with this nondiscrimination clause that Contractor had delegated some of its employment practices to any union, training program, or other source of recruitment which prevents it from meeting its obligations. However, if the evidence indicates that the Contractor was not on notice of the third-party discrimination or made a good faith effort to correct it, such factor shall be considered in mitigation in determining appropriate sanctions.

5. Where the practices of a union or any training program or other source of recruitment will result in the exclusion of minority group persons, so that Contractor will be unable to meet its obligations under this nondiscrimination clause, Contractor shall then employ and fill vacancies through other nondiscriminatory employment procedures.

6. Contractor shall comply with all state and federal laws prohibiting discrimination in hiring or employment opportunities. In the event of Contractor's noncompliance with the nondiscrimination clause of this contract or with any such laws, this contract may be terminated or suspended, in whole or in part, and Contractor may be declared temporarily ineligible for further Commonwealth contracts, and other sanctions may be imposed and remedies invoked.

7. Contractor shall furnish all necessary employment documents and records to, and permit access to its books, records, and accounts by, the contracting agency and the Office of Administration, Bureau of Affirmative Action, for purposes of investigation to ascertain compliance with the provisions of this clause. If Contractor does not possess documents or records reflecting the necessary information requested, it shall furnish such information on reporting forms supplied by the contracting agency or the Bureau of Affirmative Action.

8. Contractor shall actively recruit minority subcontractors or subcontractors with substantial minority representation among their employes.

9. Contractor shall include the provisions of this nondiscrimination clause in every subcontract, so that such provisions will be binding upon each Subcontractor.

10. Contractor obligations under this clause are limited to the Contractor's facilities within Pennsylvania or, where the contract is for purchase of goods manufactured outside of Pennsylvania, the facilities at which such goods are actually produced.

_____
(FIRM NAME)

_____ BY_____
DATE SIGNATURE AND TITLE

EXHIBIT _____

November 1999
Contract: DACA65-96-D-0092

DRAFT

U. S. Department of the Army
U. S. Army Reserve

BACKGROUND DEED RESEARCH

Facility Number: PA099
Wilkes-Barre U. S. Army Reserve Center
Wilkes-Barre, Pennsylvania

Prepared by BREGMAN & COMPANY, INC.
Under contract through
U. S. Army Corps of Engineers, Norfolk District
to:

Headquarters
99th Regional Support Command
5 Lobaugh Street
Oakdale, PA 15071

Wilkes-Barre U. S. Army Reserve Center
Background Deed Research

TABLE OF CONTENTS

Summary....1
Chain of Title....2
Appendix: The Connecticut Claimants....6

Maps:
Location of Wilkes-Barre USARC
Map of Parsons P. O. (1873)
Plains Township (1873)
Early Land Grants in Plains Township

Wilkes-Barre U. S. Army Reserve Center

1001 Highway 315 S
Wilkes-Barre, Pennsylvania
Plains Township, Luzerne County

The 3.45 acres acquired in 1954 for the establishment of an Army Reserve Center in Wilkes-Barre had been owned by the Flick estate since 1864. It is located in Plains Township, south of the town of Parsons. Reuben Flick acquired a one-half interest in this property from Calvin Parsons in 1864. It is assumed, from an examination of the 1873 map of the township, that Parsons and Flick were engaged in the coal business.

Plains Township is in an area which was claimed by early settlers from Connecticut, who purchased the property from the Susquehanna Company, rather than from the Pennsylvania proprietaries. The Susquehanna Company negotiated the purchase of the land from the Indians several years before Pennsylvania acquired it through the purchase of 1768. The confusion and conflict resulting from this situation serves to complicate the early land records for this area. It is considered that the USARC is located on one of two disputed township tracts: these were resurveyed in 1802 in a process designed to identify legitimate Connecticut claimants, and patented in 1823 and 1831, respectively. More information regarding the Connecticut claimants is included as an appendix to this document.

Wilkes-Barre U. S. Army Reserve Center

Conveyance Clement W. Perkins, et al., to the United States of America
Date 9 July 1954
Selling Price $35,000.00
Record Luzerne County Deed Book: lib. 1243, fol. 450

Boundaries and Acreage

Tract A-100: Beginning at a point in the southerly right of way line of U. S. Highway No. 315 South 25° 44' 35" East, 40 feet from the centerline of said highway at centerline station 344 96.34; thence South 23° 44' 35" East, 244.08 feet to a point in the northerly right of way line of U. S. Highway No. 115; thence with said right of way line North 77° 28' 52" East, 518.74 feet to a point; thence North 18° 9' 35" West, 327.19 feet to a point in the right of way line of the above mentioned U. S. Highway No. 315; thence along said right of way line South 68° 18' 52" West, 541.01 feet to the place of beginning. Containing 3.45 acres of land, more or less.

Notes/Other Research

Clement W. Perkins is the agent for the estate of Rubin J. Flick (formerly Reuben Flick), et al. The above described tract of land is part of the same land conveyed to Rubin J. Flick, et al., by Calvin Parsons, et ux. The deed is dated 6 July 1864, and recorded in lib. 94, fol. 578. The U. S. Government acquired Tract A-100 by a Declaration of Taking.

****

Conveyance Calvin Parsons, et ux., to Reuben Flick
Date 6 July 1864
Selling Price $7,500.00
Record Luzerne County Deed Book: lib. 94, fol. 578

Boundaries and Acreage

Beginning at a corner in the road leading from Johnson's Mill to Miner's Mill, by lands of John W. Hollenback and in the line between certified lots, numbers 18 and 19, thence along said line South 58° 45' East, 672 rods to a stone corner by lands now or late of Ziba Bennett, thence by the same South 31° 15' West,35 rods to a stone corner, thence by same lands South 58° 45' East, 257 rods to a stone corner in the back line of certified Wilkes-Barre aforesaid; thence along said line South 47° West, 106.5 rods to a stone corner by lands late of W. W. Cook (deceased); thence along line of same North 54° 45" West, 786 rods to a post corner; thence South 37° 45' West, 7.3 rods to a stone corner by lands of said Rueben J. Flick; thence by said Flick's land North 53° 45' West, 90.6 rods to a corner in the road aforesaid; thence along said road to a post corner, the place of beginning. Containing 542 acres and 25 perches.

Excepting and reserving 21 acres: Beginning at the corner hereinafter designated as the place of beginning; thence along the line between certified lots 18 and 19 (present courses) South 58° East, 130.3 rods to a white pine, corner on the bank of Laurel Run; thence South 67.75° West, 10 rods to a butternut corner, thence North 74.5° West, 30.2 rods to a stake in the center of the back road leading from Wilkes-Barre to Pittston; thence North 83° West, 77.5 rods to a corner in the center of the Johnson's and Miner's Mills road by a buttonwood; and thence along center of same North 1.75° West, 18 rods and North 8.25° East, 39.5 rods to the place of beginning.

Notes/Other Research

This deed conveys a one-half interest in this property. It has not been possible to determine from whom Parsons acquired this property. In addition to the above referenced 21 acres, the following are also reserved:

> 56 perches, conveyed to John Rhoades 20 May 1854.
>
> The soil and surface of about 0.5 of an acre conveyed to John Deahl on 5 June 1862.
>
> Rights, easements, and privileges conveyed to the Wilkes-Barre Water Company on 21 November 1862 (lib. 89, fol. 570).
>
> A tract of land reserved to the heirs of Thomas Wright (lib. 31, fol. 114).
>
> Roads reserved in a deed from Eleazer Blackman, et al., to H. Parsons dated 10 August 1824 (lib. 23, fol. 138)
>
> A strip of land to be conveyed by C. Parsons to the Lehigh Coal and Navigation Company, per the agreement dated 31 December 1863.

A significant amount of acreage is conveyed by this deed. The 1873 map of Plains Township from the *Atlas of Luzerne County, Pennsylvania* does not give specific information regarding land ownership in the area of the USARC at that time, however, a general idea of the USARC location can be established by comparing the 1873 maps of the township and of Parsons P. O.

It appears that the USARC site is on the Parsons and Flick property south of Laurel Run, and southeast of Parsons P. O. This area evidently had industrial usage relating to coal mining and processing (in 1873, the Mineral Spring Coal Company and the Baltimore Coal Company had operations in this area). The warrantee map of Plains Township does not provide enough topographical details to determine with precision which of the original township tracts is involved in this conveyance. This deed references land reserved for the heirs of Thomas Wright, but the tracts

patented to Thomas Wright appear to be too far north of the USARC tract. It appears that the USARC tract is more likely to be located on either the tract patented to Jehoida P. Johnson (7 June 1823) or the Town Committee (17 February 1831). The relatively late date for these patents, following resurvey in August 1802, are explained by the fact that this property is in an area along the Susquehanna which was claimed be settlers from Connecticut, and the resurvey was necessary in an attempt to reconcile the claims of the Connecticut settlers, who obtained their land through the Susquehanna Company, and those of the claimants who acquired their land through the Pennsylvania Land Office (see appendix)

Appendix: The Connecticut Claimants

Section IV.D.3 of Donna Bingham Munger's *Pennsylvania Land Records* gives an overview of the dispute regarding Pennsylvania lands claimed by Connecticut settlers: the following information is derived from this source.

Plains Township is located in the Wyoming Valley, an area for which the Connecticut-based Susquehanna Company purchased land rights from the Indians in the years prior to the Pennsylvania purchase in 1768. Connecticut settlers moved into the area quickly, pre-empting the movement of Pennsylvanians into the territory. The Connecticut settlers laid out township lots even as the Land Office attempted to persuade those whom they regarded as "squatters" to apply for the land. The Trenton Decree of 1782 nullified Connecticut's jurisdiction in the area, but was unable to keep some of the settlers from purchasing land through the Susquehanna Company. At the same time, speculators working through the Pennsylvania Land Office were acquiring the same land through warrant and patent.

In 1799, a board of commissioners was established to examine the Connecticut claims and award title when necessary. Connecticut settlers in seventeen townships, including Hanover, were awarded certificates which permitted a resurvey and patent (if the assessed valuation of the land was paid by the claimant). Patents to Connecticut therefore superceded the earlier Land Office warrants and patents for the same tract. The map of original land tracts appended to this document illustrates the resurvey and patent of tracts in Plains Township. Map 3 in *Pennsylvania Land Records* illustrates the townships established by the Susquehanna Company. It appears that Plains Township, in whole or in part, was originally within the boundaries of the Susquehanna Company's Wilkes-Barre Township.

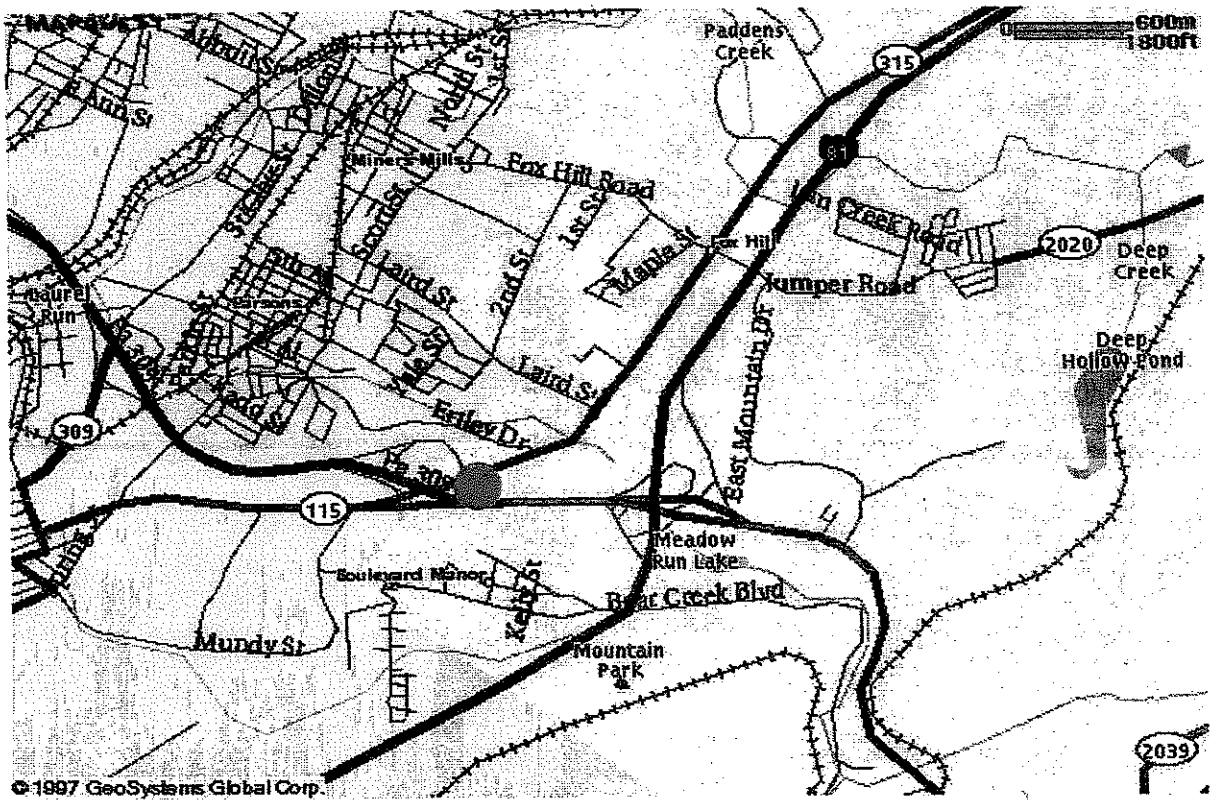

Location of Wilkes-Barre U. S. Army Reserve Center
Wilkes-Barre, Pennsylvania

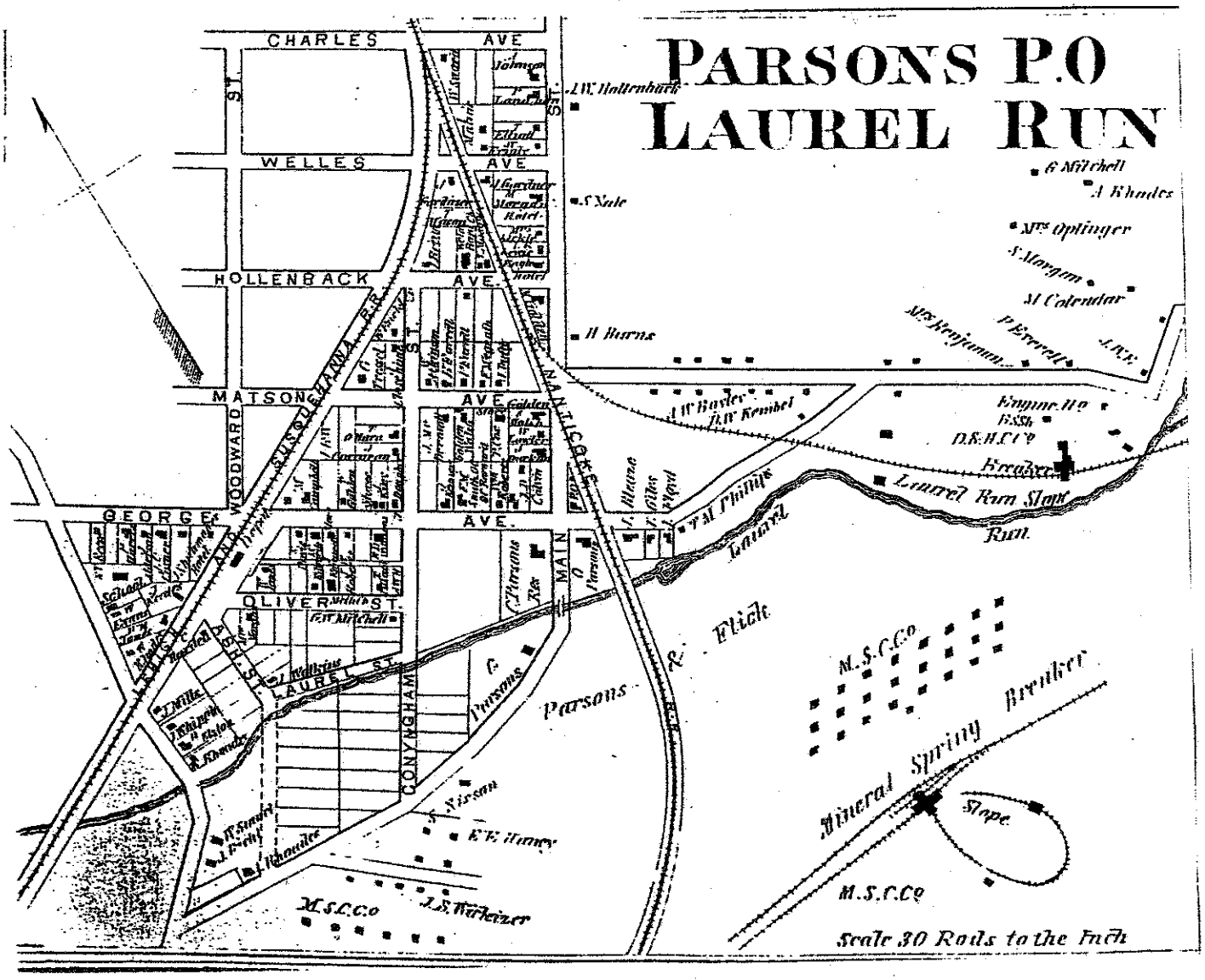

1873 Map of Parsons P. O.
Atlas of Luzerne County, Pennsylvania

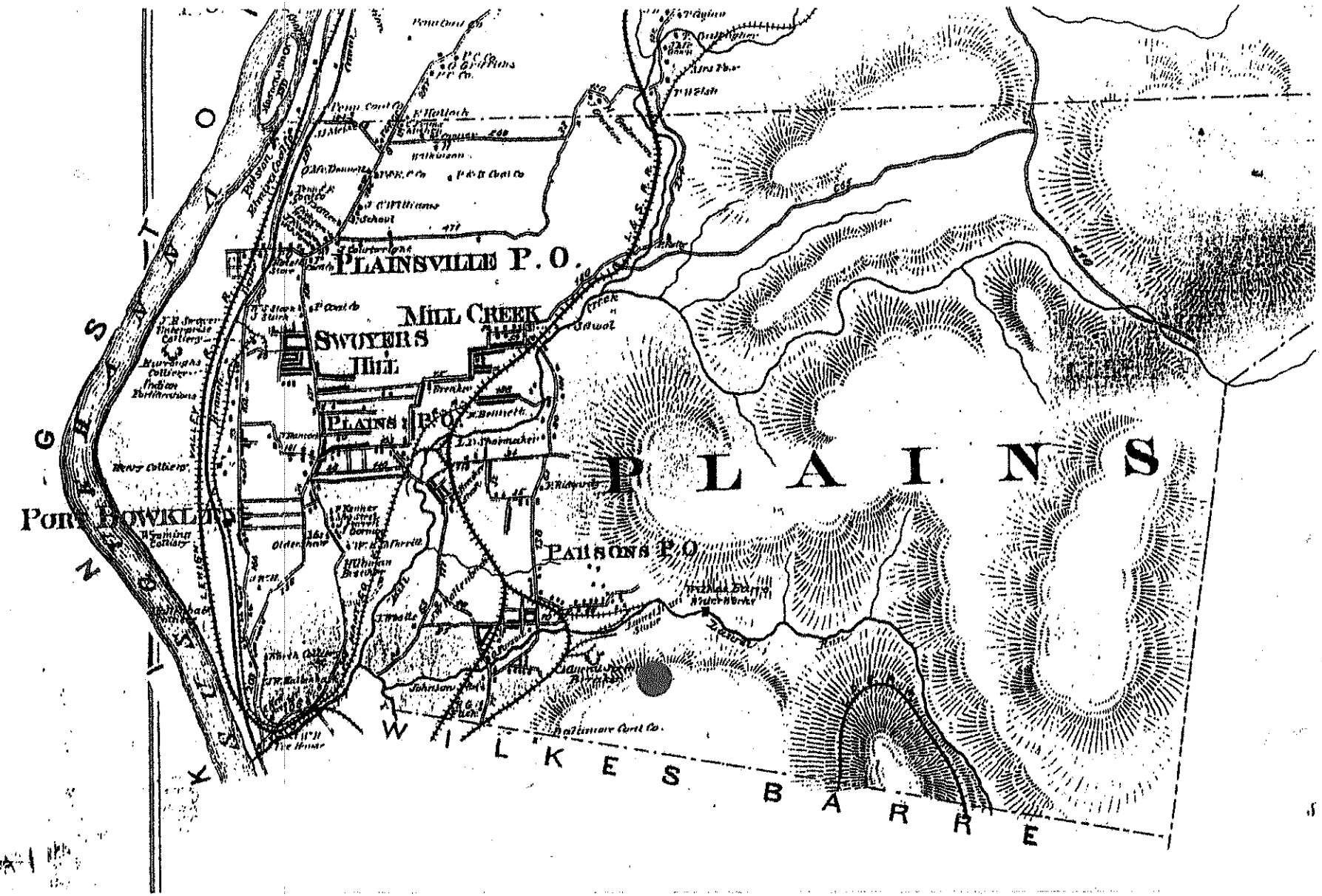

1873 Map of Plains Township
Atlas of Luzerne County, Pennsylvania

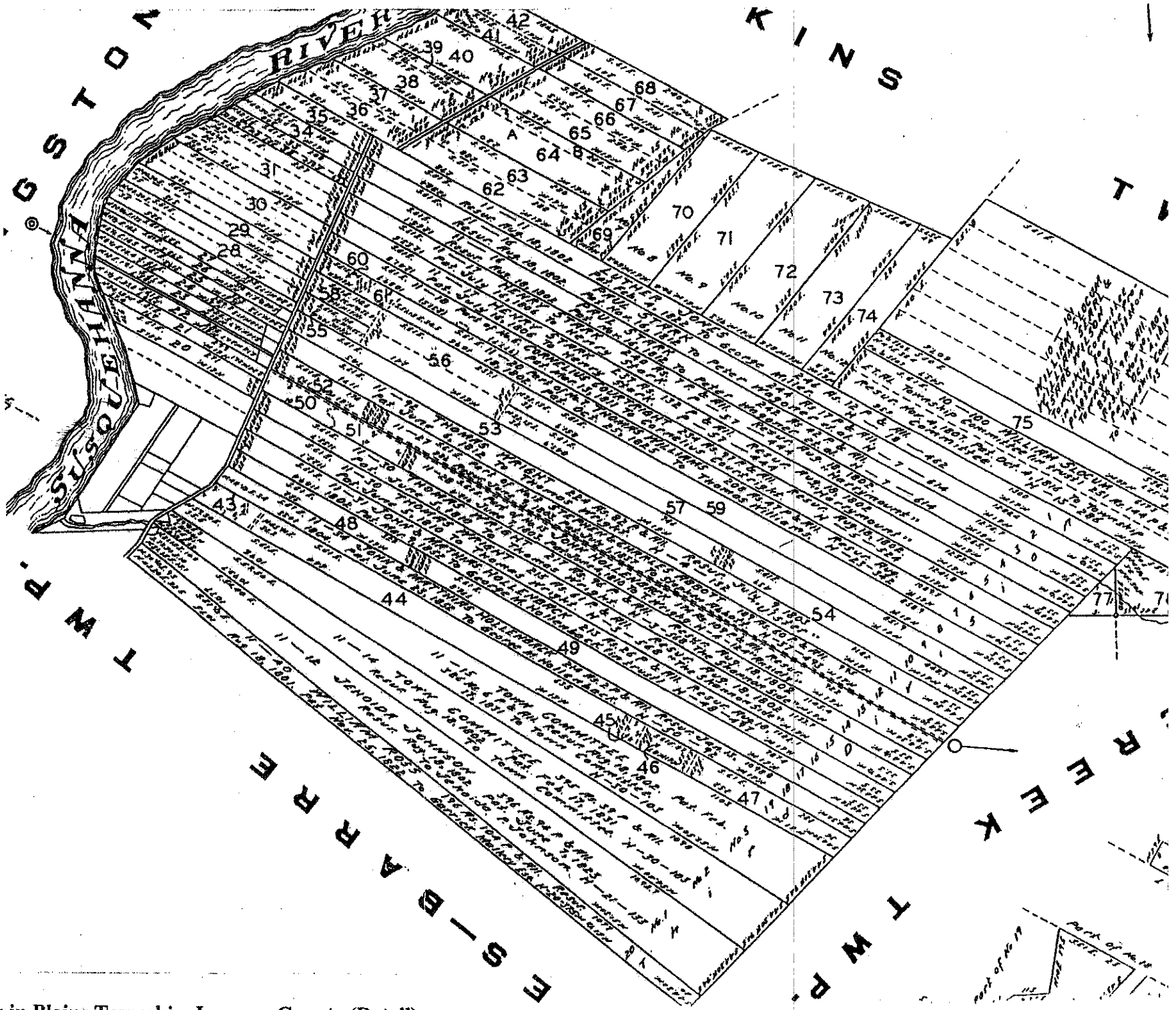

Early Land Grants in Plains Township, Luzerne County (Detail)

Appendix D

Previous Environmental Site Assessment Reports

UGI CORPORATION

ELECTRIC UTILITY DIVISION

247 Wyoming Ave. P.O. Box 1389; Kingston, Pa. 18704-0389 (717) 283-0611

December 3, 1990

AFKA-ZQ-DE-E
Fort Indiantown Gap
Annville, Pennsylvania 17003-5011

Gentlemen:

This letter is in response to your request for information concerning the PCB content of transformers at the Army Reserve facility located in the Hanover Industrial Park, Wilkes-Barre, Pennsylvania.

The transformer information is as follows:

Number of Transformers	-	1
Manufacturer	-	General Electric
Date of Manufacture	-	1978
Serial Number	-	M314711TCPA
Model Number	-	GEI-79025

A certified laboratory was utilized to test the oil contained in this transformer for PCB content. It was found to be less than the detectable limit of one ppm.

If you need further information, please do not hesitate to contact this office.

Sincerely yours,

George R. Young

George R. Young
Senior Engineer Standards

GRY:lj

r.e. wright associates, inc.
earth resources consultants

July 9, 1993

Mr. Ken Malick, Engineer
Environmental/Energy Office
Code AFKA-ZQ-DE-E
Fort Indiantown Gap
Annville, PA 17003-5011

Re: Transmittal of UST Closure Report
United States Army Reserve Center
Wilkes-Barre, Pennsylvania
REWAI Project 93241

Dear Mr. Malick:

R. E. Wright Associates, Inc. (REWAI) is pleased to forward you two copies of the attached closure report which documents the excavation and removal of one 1,000-gallon No. 2 fuel oil underground storage tank (UST) from the United States Army Reserve Center (USARC) located in Wilkes-Barre, Pennsylvania. The report format is presented in accordance with the Commonwealth of Pennsylvania Department of Environmental Resources (DER), Bureau of Water Quality Management, Guidance for Underground Storage Systems in Pennsylvania, Closure/Change-in-Service, Site Assessment/ Remediation, dated April 1990. Because the former UST was not subject to regulation under provisions of the Storage Tank and Spill and Prevention Act, you are not required to submit the report to DER.

As stated in the report, results of the soil sample analysis indicated non-detectable concentrations of benzene, toluene, ethylbenzene, and xylene (BTEX) and concentrations of diesel range organics (DRO) ranging from 19 to 360 milligrams per kilogram (mg/kg) or parts per million (ppm). DER usually requires cleanup of soils exceeding 100 mg/kg DRO, however, because of the good tank condition and screening of the soils in the excavation surrounding the UST did not indicate evidence of hydrocarbon and because anomalous DRO concentrations have been documented in association with coal residue, REWAI recommends no further investigative or remedial action be pursued concerning this matter. This recommendation is consistent with the opinion of Mr. Joe Koval of the

3240 schoolhouse road middletown, pa 17057-3595 (717) 944-5501 fax (717) 944-5642

DER, who was briefed of the project details during an informal phone conversation on June 30, 1993.

REWAI appreciates the opportunity to provide these environmental services. If you should have any comments, questions, or need further assistance with this project or any other issues, please feel free to contact us.

Very truly yours,

R. E. WRIGHT ASSOCIATES, INC.

Christopher D. O'Neil
Project Hydrogeologist

Kent V. Littlefield, P.G.
Project Director

CDO:lc
Attachments

UNITED STATES ARMY RESERVE CENTER
WILKES-BARRE FACILITY
LUZERNE COUNTY, PENNSYLVANIA

UNDERGROUND STORAGE TANK
CLOSURE REPORT

Prepared for

DIRECTORATE OF ENGINEERING AND HOUSING
FORT INDIANTOWN GAP, PA

Prepared by

R. E. WRIGHT ASSOCIATES, INC.
3240 Schoolhouse Road
Middletown, PA 17057

REWAI Project 93241
July 1993

UNITED STATES ARMY RESERVE CENTER
WILKES-BARRE FACILITY
LUZERNE COUNTY, PENNSYLVANIA

UNDERGROUND STORAGE TANK
CLOSURE REPORT

Prepared for

Directorate of Engineering and Housing
Fort Indiantown Gap, PA

By

R. E. WRIGHT ASSOCIATES, INC.
3240 Schoolhouse Road
Middletown, PA 17057

REWAI Project 93241
July 1993

Respectfully submitted,

Christopher D. O'Neil
Project Hydrogeologist

Reviewed by:

Kent V. Littlefield, P.G.
Project Director

INTRODUCTION

The following closure report provides the information required by the Pennsylvania Department of Environmental Resources (DER) document, entitled *Guidance for Underground Storage Tank Closure/Change-in-Service* (April 1990).

PENNSYLVANIA CLOSURE REPORT CONTENTS
FIELD CHECKLIST

1. **Name and Site Location:** United States Army Reserve Center
1001 Highway 315
Plains Township, Luzerne County
Wilkes-Barre, PA 18702

Site Contact: Mr. Silvi at (717) 824-3587
Project Contact: Mr. Malick at (717) 865-5444, ext. 2634

Facility Size and Coverage: According to United States Army Reserve Center (USARC) personnel, the site occupies an approximate 3.5-acre tract of land.

Site Elevation: Approximately 800 feet above mean sea level (AMSL) (Figure 1).

Storage Tank Registration No.: Tank registration not required under current provisions of the Storage Tank Spill and Prevention Act.

2. **Date of tank closure:** On June 14, 1993, a steel 1,000-gallon, No. 2 fuel oil underground storage tank (UST) was excavated and removed from the eastern side of the maintenance shop at the USARC, located along Highway 315 in Wilkes-Barre, Pennsylvania (Figure 2). The closure was completed following the protocol set forth in REWAI Proposal No. 930254, dated April 16, 1993. The UST excavation and removal was completed by Corey, Inc. of Plains, Pennsylvania, under the supervision of a certified UST inspector provided by R. E. Wright Associates, Inc. (REWAI).

3. **Number, capacity, contents, and construction of tank(s) closed:** One 1,000-gallon steel No. 2 fuel oil UST.

4. **Site Photos:** Attachment 1.

5. **All pertinent (topographic, water table contour, etc.) maps of the site:** Figure 1.

6. **A plot map of the site, drawn to scale, which shows adjacent streets or roads, and provides directions to the nearest major street or highway:**

   a. **Buildings on the site.** Illustrated on Figures 1 and 2.

   b. **Locations of existing and removed tanks, lines, and pump islands.** Figure 2.

   c. **Locations where free product, visible staining, high instrument readings, or other indications of contamination were found.** No hydrocarbon staining, odors, or free product were observed to be present in the soils surrounding the UST at the time of removal. Additionally, no holes, loose couplings, or other indications of failure were observed on the UST or attached piping.

   d. **Soil and groundwater sampling locations, with identification number or description of samples collected.** Soil sample locations, identification number, and analysis results are illustrated on Figure 2. No groundwater was encountered in the excavation during the UST removal.

   e. **Locations of all wells and springs used as public or private source of water supply within a 500-foot radius of the site.** According to USARC personnel, the site is supplied with both city sewer and water and no groundwater supply wells, monitoring wells, or springs are located within a 500-foot radius of the site (Figure 1). The closest surface water body to the site is Laurel Run, which is located approximately 0.25 miles to the north of the site, and has an approximate water surface elevation of 760 feet AMSL.

   f. **Description of soils and bedrock geology.** Soils at the site have been mapped by the United States Department of Agriculture (USDA) Soil

Conservation Service (SCS) as cut or fill materials (USDA, October 1981). Bedrock at the site has been mapped as the Llewellyn Formation (Atlas of Preliminary Geologic Quadrangle Maps of Pennsylvania, Bureau of Topographic and Geologic Survey, Map 452, Pittston Quadrangle 1976). The Llewellyn Formation generally consists of interbedded gray and brown sandstone, siltstone, conglomerate, and shale with abundant anthracite coal beds.

7. **A brief description of the site and operations conducted at the site (historical and present):** According to USARC personnel, the site was first developed in 1956, and has been used for Army reserve training purposes since that time. The UST was installed sometime after 1956, and has been used to supply No. 2 fuel oil to the maintenance shop space heaters.

8. **Types and characteristics of regulated substances stored in the UST and the types of physical hazards present, if any.** Since its installation, the former UST has been used only for No. 2 fuel oil storage.

9. **Description of sample collection procedures, sample preservation methods, including a description of sample containers, sample identification methods, chain-of-custody procedures and documentations, and analytical methods:**

   a. **Sample Collection Procedures** - All soil samples were manually containerized wearing clean latex gloves (grab samples) from the backhoe bucket, which retrieved each sample from along sides of the concrete pad underlying the UST.

   b. **Sample Preservation Methods** - Upon collection, soil samples were immediately transferred into laboratory-cleaned, septa-sealed, 125-milliliter (ml) glass containers and stored in a cooler prior to and during transport to the laboratory.

   c. **Sample Identification Methods** - Immediately following sample containerization, container was labeled with the following information:

      1) Name and location of project site.

      2) REWAI job number.

3) Sample number.

4) Date and time sampled.

5) Sample collector.

6) Method of collection.

7) Preservation.

8) Analysis to be completed.

Chain-of-custody Procedures and Documentation - Samples were documented and traceable from when they were collected, throughout all transitions, and to the time Wright Lab Services, Inc. (WLSI) of Middletown, Pennsylvania, assumed custody upon receipt of the samples. A chain-of-custody form accompanied all sample containers during this time to document possession of each given sample. All the pertinent information regarding each sample was recorded on the chain of custody (Attachment 2) and exchanges of custody were noted on the form.

Analytical Methods - Soil samples were analyzed by WLSI for total petroleum hydrocarbons (TPH) using gas chromatograph (GC) flame-ionization detector (FID) methods, following American Petroleum Institute (API) methods for diesel range organics (DRO) and fuel oil constituents, benzene, toluene, ethylbenzene, and xylene (BTEX) by United States Environmental Protection Agency (EPA) Method 8020.

10. **Description of decontamination procedures used on sampling and excavation equipment:** Samples were collected individually using disposable, clean latex gloves by manually placing soils from the backhoe bucket directly into laboratory-cleaned sample bottles.

11a. **Summary of all sampling data:** Table 1 and Figure 2 illustrate the results of the soil samples and the original laboratory reports are included as Attachment 2.

TABLE 1

Summary of Soil Sample Results
USARC - Wilkes-Barre, Pennsylvania
REWAI Project 93241

All results in milligrams per kilogram (mg/kg)

Sample Location	Date Sampled	Sample Location Description	Sample No.	Depth Sampled (feet bgl)	Matrix	TPH (DRO)	BTEX
S-1	6/14/93	West side of UST bottom	49724-1	7.5	Soil	19*	ND
S-2	6/14/93	North side of UST bottom	49724-2	7.5	Soil	40*	ND
S-3	6/14/93	South side of UST bottom	49724-3	7.5	Soil	160*	ND
S-4	6/14/93	East side of UST bottom	49724-4	7.5	Soil	360*	ND

ND = Compound Not Detected

*Hydrocarbons later eluting than the typical diesel fuel fingerprint were detected during the DRO analysis. The result was calculated as DRO.

11b. **Interpretation of the sampling data:**

Results of the soil sampling indicate non-detectable (below the detection limits of the analysis method) BTEX concentrations; however, concentrations of DRO were detected at concentrations ranging from 19 to 360 milligrams per kilogram (mg/kg) in samples S-1 and S-4, respectively. These results are contradictory to observations made in the field during the UST excavation, which did not indicate any holes in the UST or associated piping and no hydrocarbon staining or odors were apparent in the soils surrounding the UST or in the soil samples collected for analysis. The laboratory results indicating the presence of DRO may be related to interferences caused by the presence of hydrocarbons in coal fragments that were present throughout the excavation sidewalls and in the tank backfill materials. However, the laboratory could not confirm or deny whether or not the presence of coal may have influenced the results of the DRO analysis results.

12. **Controls taken to minimize risks to the public such as use of fences, warning signs, etc.:** USARC personnel were notified of the UST closure activities prior to initiating the UST closure. During the excavation, the area was supervised by REWAI and USARC personnel at all times. Upon completion of closure activities, all materials excavated from around the former UST and clean fill materials provided by the excavation contractor were used to backfill the excavation to grade level in compacted lifts. Upon completion of backfilling, the excavation was covered with asphalt paving.

13. **Controls taken to reduce migration of surface runoff of regulated substances or contaminants:** None necessary.

14. **Controls taken to monitor and mitigate fire, explosion, and vapor hazards:** Because the majority of the No. 2 fuel oil was pumped from the UST prior to its removal, no vapor hazards were encountered. For emergency purposes, fire extinguishers were available on-site during all work.

15. **Identification and removal of free contaminants in groundwater including type of recovery system used:** None were used because no free-phase hydrocarbons or groundwater were encountered in the UST excavation.

16. **Activities related to removal of contaminated soils:** No apparent hydrocarbon odors or staining were observed to be present in the soils surrounding the UST, therefore, no contaminated soils were excavated or stockpiled on-site for disposal.

17. **Activities related to removal of tanks or other containers that contains, may contain, or contained regulated substances or contaminants:** Upon excavation and a thorough cleaning of the inside of the UST, the UST was transported off-site by Corey, Inc. and subsequently disposed of at Bielecki Scrap and Recycling Center of Wilkes-Barre, Pennsylvania (Attachment 3).

18. **Containment, treatment, transport, storage, disposal, or incineration of regulated substances:** Approximately 70 gallons of residual fluids were removed and drummed from the UST prior to and after its removal. These fluids have subsequently been used by Corey, Inc. (Attachment 4).

19. **Alternate water supply provided and/or treatment of existing supplies:** None necessary.

20. **Ventilation systems for buildings, utility lines, or vaults that are collecting vapors:** None necessary.

21. **Necessary permits obtained:**

    a. Thirty-day Notification of Closure: None necessary because UST was not regulated.

    b. Pennsylvania One Call System, Inc. Notification: REWAI notified the Pennsylvania One Call System, Inc. of the UST closure on June 8, 1993 (Serial No. 1590597).

    c. Building Permit: An appropriate building permit was obtained by Corey, Inc. prior to the UST closure.

LIST OF ATTACHMENTS

Attachment 1, Photographs . . . . . Following Text

Attachment 2, Soil Sample Analysis Results . . . . . Following Text

Attachment 3, UST Certificate of Disposal . . . . . Following Text

Attachment 4, Fluid Disposal Documentation . . . . . Following Text

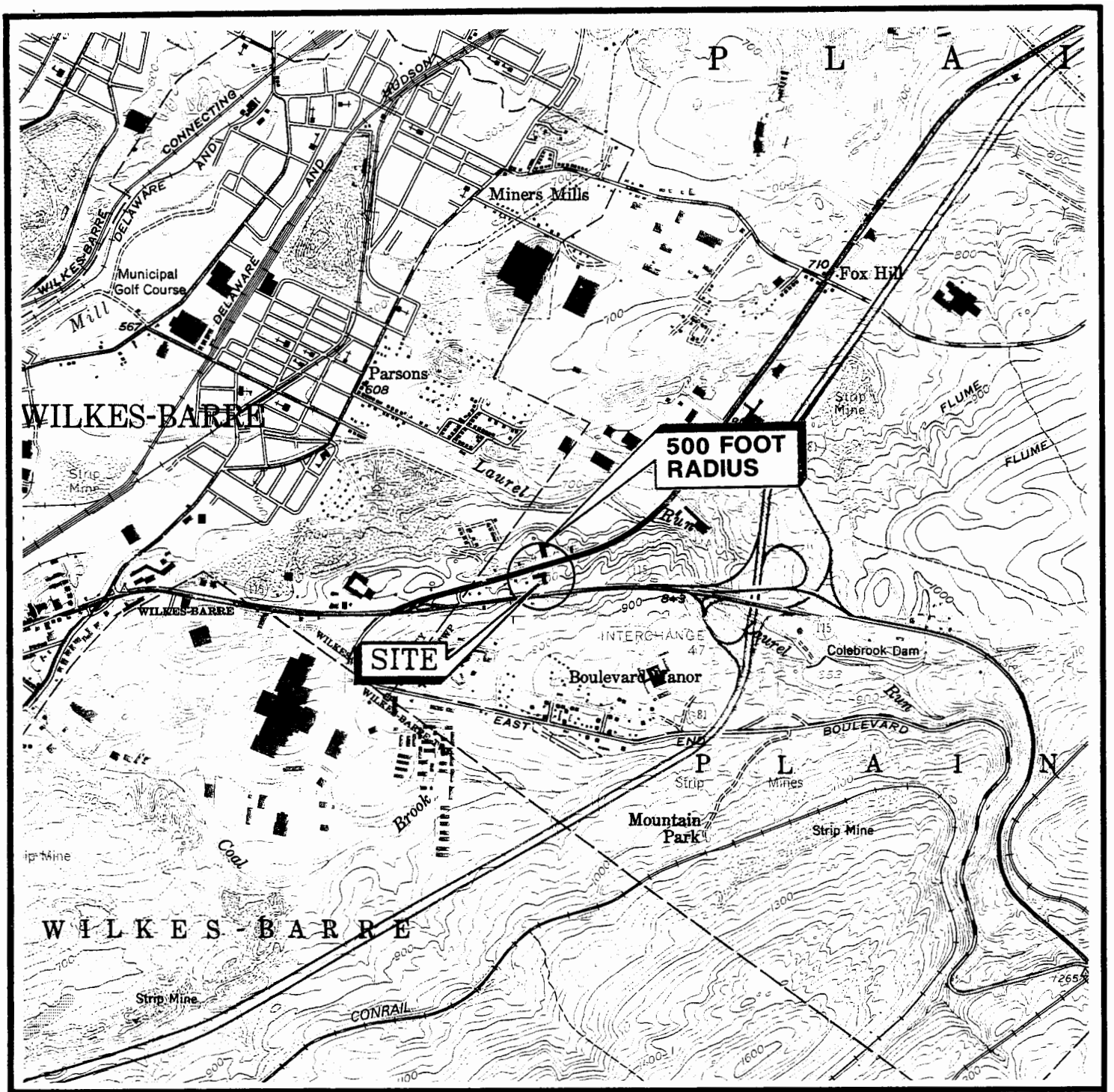

NOTE: BASE MAP FROM THE PITTSTON (PHOTOREVISED 1983), 1969 AND 1976), AND WILKES–BARRES EAST (PHOTOREVISED 1983), PA 7.5 MINUTE USGS TOPOGRAPHIC QUADRANGLES.

2000' 0 2000'
SCALE IN FEET

PENNSYLVANIA
QUADRANGLE LOCATION

FIGURE 1

UNITED STATES
ARMY RESERVE CENTER
WILKES–BARRE, PA

SITE LOCATION MAP

drawn CCS	approved KVL	drawing no.
checked	date 6/23/93	93241–001–AA

r.e. wright associates, inc.
earth resources consultants
middletown, pa. wayne, pa westminster, md.

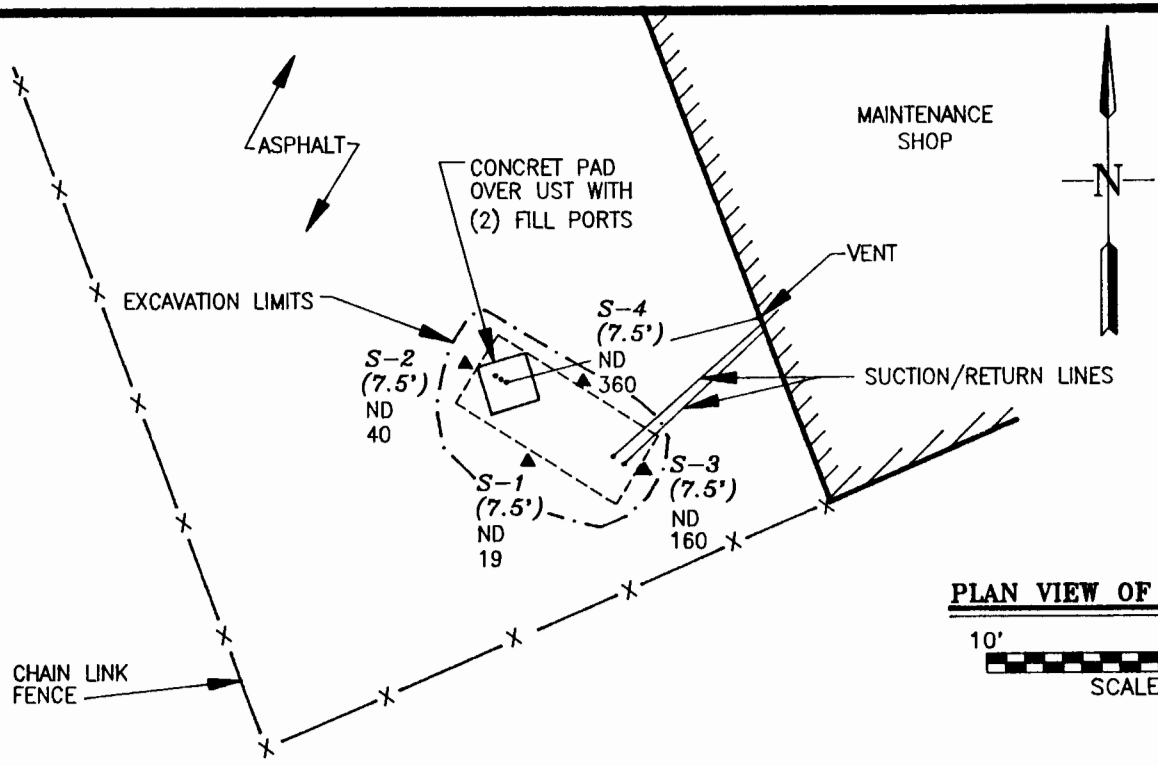

LEGEND

	FORMER UNDEGROUND STORAGE TANK
▲S-2 (7.5') BTEX DRO	SOIL SAMPLE LOCATION, DEPTH SAMPLED, AND TOTAL BENZENE, TOLUENE, ETHYLBENZENE, AND DIESEL RANGE ORGANIC (DRO) CONCENTRATION (MG/KG)
ND	NOT DETECTED

NOTE: ALL SAMPLES WERE ANALYZED BY WRIGHT LABORATORY SERVICES, INC (WLSI).

PLAN VIEW OF UST EXCAVATION

10' 0 10'

SCALE IN FEET

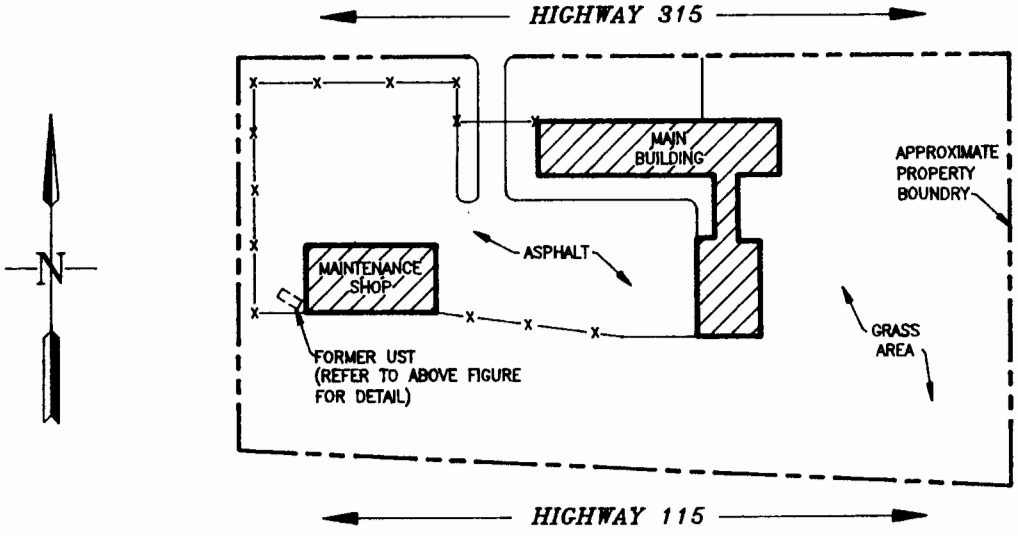

SITE MAP

NOT TO SCALE

FIGURE 2

UNITED STATES ARMY RESERVE CENTER
WILKES-BARRE, PA

SITE MAP

drawn CCS	approved KRL	drawing no.
checked COO	date 6/23/93	93241-002-AA

r.e. wright associates, inc.
earth resources consultants

ATTACHMENT 1

Photographs

UST Excavation Site Area
(June 14, 1993)

Excavation activities associated with the removal of the 1,000-gallon No. 2 fuel oil UST (June 14, 1993).

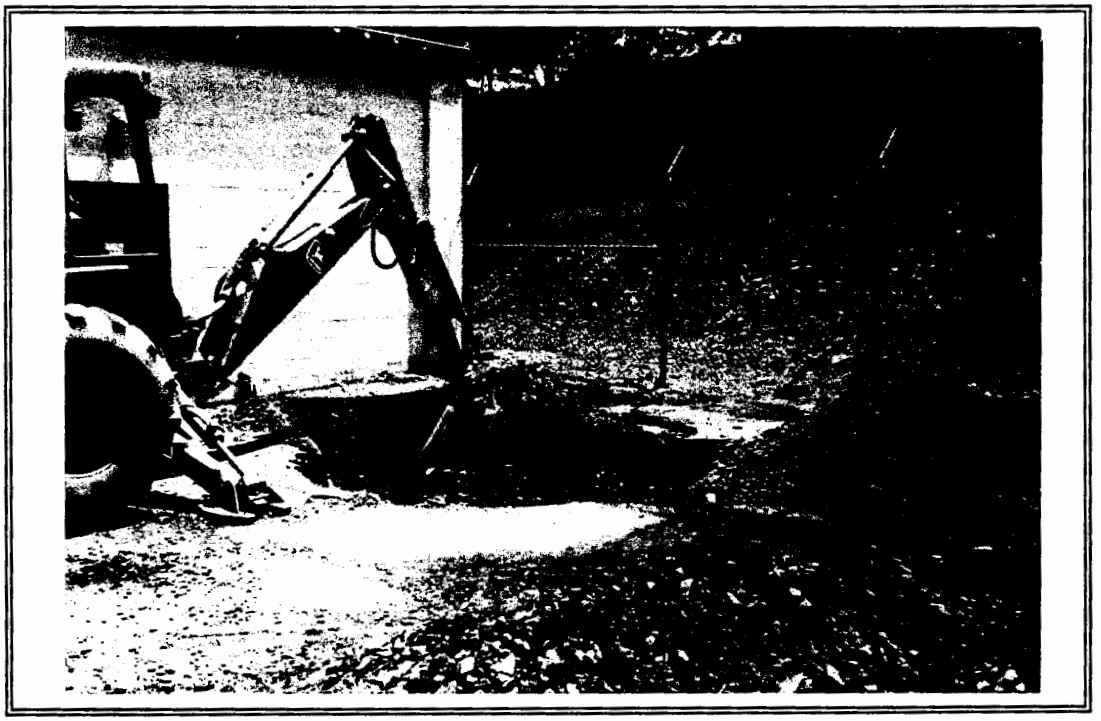

Excavation following the removal of the 1,000-gallon No. 2 fuel oil UST (June 14, 1993).

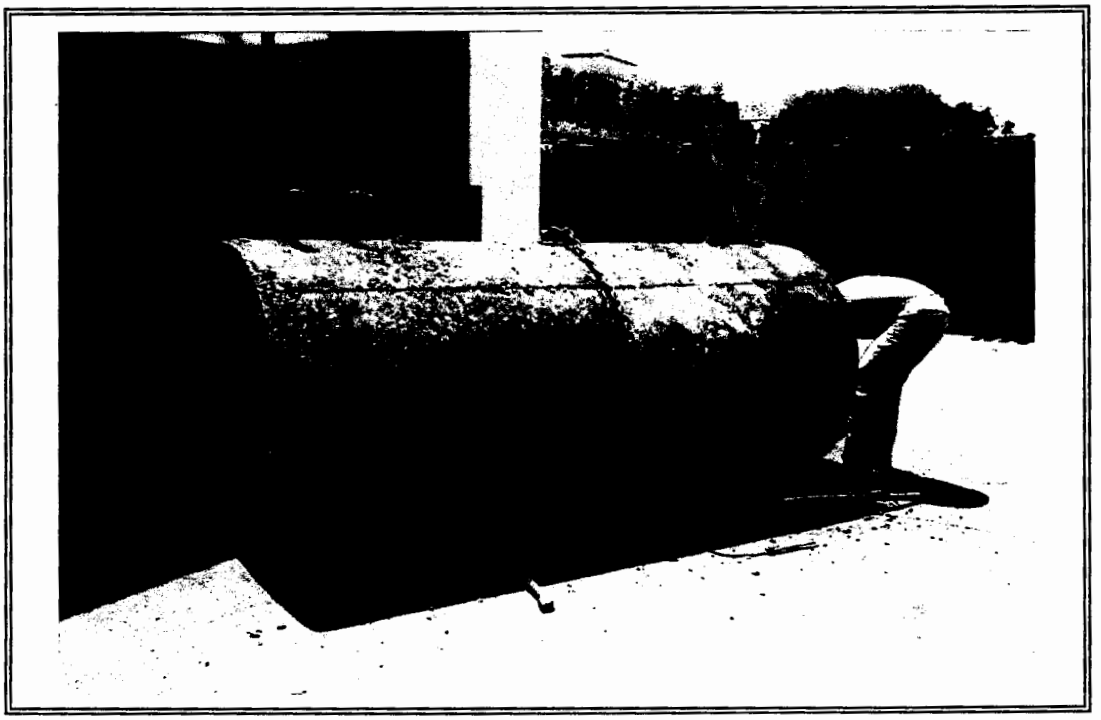

1,000-gallon No. 2 fuel oil UST following removal.

ATTACHMENT 2

Soil Sample Analysis Results

Wright Lab SERVICES INC.
ENVIRONMENTAL TESTING LABORATORIES

ATTN: Mr. Rick Herpel
Defense Industry Supply Center
700 Robbins Avenue
DISC-EPT-Bldg.3
Philadelphia PA 191115096

June 28, 1993

LAB ANALYSIS REPORT

Job Name	: Defense Ind. Supply	Customer PO#	:
Job Number	: D3612-RH-LM	Date Sampled	: 06/14/93 11:26 AM
Location	: S-1 West Side of UST USARC, Wilkes-Barre UST	Date Received	: 06/14/93
Sample State	: Soil Grab	Date Completed	: 06/24/93
Collector	: CLT	Discard Date	: 07/01/93

TEST/PARAMETER	RESULT	UNITS	DETECTION LIMIT	METHOD
GAS CHROMATOGRAPH ANALYSES				
BTEX BY MODIFIED 8020				
Benzene	N.D.	ug/kg	5	8020
Ethylbenzene	N.D.	ug/kg	5	8020
m-Xylene	N.D.	ug/kg	5	8020
o-Xylene	N.D.	ug/kg	5	8020
p-Xylene	N.D.	ug/kg	5	8020
Toluene	N.D.	ug/kg	5	8020
GAS CHROMATOGRAPH ANALYSES				
TPH - Diesel Range Organics	19	mg/kg	5.5	API

N.D. - Not Detected

**** Continued ****

Wright Lab SERVICES INC.
ENVIRONMENTAL TESTING LABORATORIES

June 28, 1993

Hydrocarbons later eluting than the typical diesel fuel fingerprint were detected during the diesel range organics analysis. The result was calculated as diesel range organics.

QUALITY ASSURANCE REPORT

Q/A PARAMETER	RESULT	
GAS CHROMATOGRAPH ANALYSES		
BTEX BY MODIFIED 8020		
a,a,a-Trifluorotoluene	83	% Recovery Surrogate

Respectfully Submitted,
WRIGHT LAB SERVICES
Ian Milnes
Ian Milnes
Laboratory Manager

CC: Army Reserve Command Steve Costello

34 Dogwood Lane • Middletown, PA 17057
(717) 944-5541 • FAX (717) 944-1430
Philadelphia • (215) 640-1323
Maryland • (410) 244-8889

Wright Lab SERVICES INC.
ENVIRONMENTAL TESTING LABORATORIES

ATTN: Mr. Rick Herpel
Defense Industry Supply Center
700 Robbins Avenue
DISC-EPT-Bldg.3
Philadelphia PA 191115096

June 28, 1993

LAB ANALYSIS REPORT

Job Name	: Defense Ind. Supply	Customer PO#	:
Job Number	: D3612-RH-LM	Date Sampled	: 06/14/93 11:36 AM
Location	: S-2 North Side of UST USARC, Wilkes-Barre UST	Date Received	: 06/14/93
Sample State	: Soil Grab	Date Completed	: 06/24/93
Collector	: CLT	Discard Date	: 07/01/93

TEST/PARAMETER	RESULT	UNITS	DETECTION LIMIT	METHOD
GAS CHROMATOGRAPH ANALYSES				
BTEX BY MODIFIED 8020				
Benzene	N.D.	ug/kg	5	8020
Ethylbenzene	N.D.	ug/kg	5	8020
m-Xylene	N.D.	ug/kg	5	8020
o-Xylene	N.D.	ug/kg	5	8020
p-Xylene	N.D.	ug/kg	5	8020
Toluene	N.D.	ug/kg	5	8020
GAS CHROMATOGRAPH ANALYSES				
TPH - Diesel Range Organics	40	mg/kg	5.5	API

N.D. - Not Detected

**** Continued ****

34 Dogwood Lane • Middletown, PA 17057
(717) 944-5541 • FAX (717) 944-1430
Philadelphia • (215) 640-1323
Maryland • (410) 244-8889

Wright Lab SERVICES INC.
ENVIRONMENTAL TESTING LABORATORIES

June 28, 1993

Hydrocarbons later eluting than the typical diesel fuel fingerprint were detected during the diesel range organics analysis. The result was calculated as diesel range organics.

QUALITY ASSURANCE REPORT

Q/A PARAMETER	RESULT	
GAS CHROMATOGRAPH ANALYSES		
BTEX BY MODIFIED 8020		
a,a,a-Trifluorotoluene	96	% Recovery Surrogate

Respectfully Submitted,
WRIGHT LAB SERVICES

Ian Milnes
Laboratory Manager

CC: Army Reserve Command Steve Costello

34 Dogwood Lane • Middletown, PA 17057
(717) 944-5541 • FAX (717) 944-1430
Philadelphia • (215) 640-1323
Maryland • (410) 244-8889

Wright Lab SERVICES INC.
ENVIRONMENTAL TESTING LABORATORIES

Sample # 49724-3

ATTN: Mr. Rick Herpel
Defense Industry Supply Center
700 Robbins Avenue
DISC-EPT-Bldg.3
Philadelphia PA 191115096

June 28, 1993

LAB ANALYSIS REPORT

Job Name	: Defense Ind. Supply	Customer PO#	:
Job Number	: D3612-RH-LM	Date Sampled	: 06/14/93 11:44 AM
Location	: S-3 South Side of UST USARC, Wilkes-Barre UST	Date Received	: 06/14/93
Sample State	: Soil Grab	Date Completed	: 06/24/93
Collector	: CLT	Discard Date	: 07/01/93

TEST/PARAMETER	RESULT	UNITS	DETECTION LIMIT	METHOD
GAS CHROMATOGRAPH ANALYSES				
BTEX BY MODIFIED 8020				
Benzene	N.D.	ug/kg	5	8020
Ethylbenzene	N.D.	ug/kg	5	8020
m-Xylene	N.D.	ug/kg	5	8020
o-Xylene	N.D.	ug/kg	5	8020
p-Xylene	N.D.	ug/kg	5	8020
Toluene	N.D.	ug/kg	5	8020
GAS CHROMATOGRAPH ANALYSES				
TPH - Diesel Range Organics	160	mg/kg	5.5	API

N.D. - Not Detected

**** Continued ****

Wright Lab SERVICES INC.
ENVIRONMENTAL TESTING LABORATORIES

June 28, 1993

Hydrocarbons later eluting than the typical diesel fuel fingerprint were detected during the diesel range organics analysis. The result was calculated as diesel range organics.

QUALITY ASSURANCE REPORT

Q/A PARAMETER	RESULT	
GAS CHROMATOGRAPH ANALYSES		
BTEX BY MODIFIED 8020		
a,a,a-Trifluorotoluene	96	% Recovery Surrogate

Respectfully Submitted,
WRIGHT LAB SERVICES

Ian Milnes
Laboratory Manager

CC: Army Reserve Command Steve Costello

34 Dogwood Lane • Middletown, PA 17057
(717) 944-5541 • FAX (717) 944-1430
Philadelphia • (215) 640-1323
Maryland • (410) 244-8889

Wright Lab SERVICES INC.
ENVIRONMENTAL TESTING LABORATORIES

ATTN: Mr. Rick Herpel
Defense Industry Supply Center
700 Robbins Avenue
DISC-EPT-Bldg.3
Philadelphia PA 191115096

June 28, 1993

LAB ANALYSIS REPORT

Job Name	: Defense Ind. Supply	Customer PO#	:
Job Number	: D3612-RH-LM	Date Sampled	: 06/14/93 11:52 AM
Location	: S-4 East Side of UST USARC, Wilkes-Barre UST	Date Received	: 06/14/93
Sample State	: Soil Grab	Date Completed	: 06/24/93
Collector	: CLT	Discard Date	: 07/01/93

TEST/PARAMETER	RESULT	UNITS	DETECTION LIMIT	METHOD
GAS CHROMATOGRAPH ANALYSES				
BTEX BY MODIFIED 8020				
Benzene	N.D.	ug/kg	5	8020
Ethylbenzene	N.D.	ug/kg	5	8020
m-Xylene	N.D.	ug/kg	5	8020
o-Xylene	N.D.	ug/kg	5	8020
p-Xylene	N.D.	ug/kg	5	8020
Toluene	N.D.	ug/kg	5	8020
GAS CHROMATOGRAPH ANALYSES				
TPH - Diesel Range Organics	360	mg/kg	11	API

N.D. - Not Detected

**** Continued ****

Wright Lab SERVICES INC.
ENVIRONMENTAL TESTING LABORATORIES

June 28, 1993

Hydrocarbons later eluting than the typical diesel fuel fingerprint were detected during the diesel range organics analysis. The result was calculated as diesel range organics.

QUALITY ASSURANCE REPORT

Q/A PARAMETER	RESULT	
GAS CHROMATOGRAPH ANALYSES		
BTEX BY MODIFIED 8020		
a,a,a-Trifluorotoluene	88	% Recovery Surrogate

Respectfully Submitted,
WRIGHT LAB SERVICES

Ian Milnes
Laboratory Manager

CC: Army Reserve Command Steve Costello

34 Dogwood Lane • Middletown, PA 17057
(717) 944-5541 • FAX (717) 944-1430
Philadelphia • (215) 640-1323
Maryland • (410) 244-8889

PHONE ORDER TAKEN BY: _____

DATE ORDERED: ___/___/___

Wright Lab Services, Inc.
CHAIN OF CUSTODY RECORD

049724

DATE REQUESTED: ___/___/___

REPORT TO: Army Reserve Study Center	CONTACT: Steve Costello	PHONE NO. (215) 443-1795	SALESMAN: Wayne
700 Robbins Ave.	PROJECT NAME: [illegible] Phase 1 UST Closure	PROJECT NO.	P.O. NO. CA-CO-13-N-0792-
USAR-EST Building 3	DATE SAMPLED: 6-93	SAMPLER(S)	024-25, 26, 27
Philadelphia PA 19111-5096			
BILL TO: ARN Risk Mgmt			

ANALYSES TO BE PERFORMED

	SAMPLE DESCRIPTION/LOCATION	TIME OF SAMPLING	TOTAL NO. OF CONTAINERS	BTEX	TPH by GC Fingerprint (Diesel)												REMARKS
1	S-1: West side of UST Bottom	11:26	2	X	X												Samples from around
2	S-2: North side of UST Bottom	11:36	2	X	X												1000 gallon fuel
3	S-3: South side of UST Bottom	11:44	2	X	X												out U.S.T. All samples
4	S-4: East side of UST Bottom	11:52	2	X	X												soil/[illegible] and [illegible]
5																	[illegible]
6																	
7																	
8																	
9																	
10																	

REMARKS: Please send copy of Results to: Steve Costello
Army Reserve Command
John Worts Memorial Center
HQ 79 Army Reserve Command
ARC-PA-EN
Willow Grove PA 19090-5110

Task: L.M.

SHIPPING CARRIER:

SHIPPING TICKET NUMBER:

CHAIN-OF-CUSTODY SEAL: INTACT BROKEN ABSENT

RELINQUISHED BY:	DATE	TIME	RECEIVED BY:	DATE	TIME	RELINQUISHED BY:	DATE	TIME
Arthur N. O'Neil	6-14-93	1513	[illegible]					
RECEIVED BY:	DATE	TIME	RELINQUISHED BY:	DATE	TIME	RECEIVED BY:	DATE	TIME
RELINQUISHED BY:	DATE	TIME	RELINQUISHED BY:	DATE	TIME	RECEIVED BY:	DATE	TIME

ATTACHMENT 3

UST Certificate of Disposal

54686

BIELECKI SCRAP & RECYCLING CENTER

840 NORTH PENNSYLVANIA AVE.
WILKES-BARRE, PA 18705
Phone 717-822-2002

All claims and returned goods MUST be accompanied by this bill.

DATE _____ 19____

M John Babcock

ADDRESS Litton PA

MON.	TUES.	WED.	THURS.	FRI.	SAT.	SPECIAL	CALL	DEL.

QUAN.	DESCRIPTION	PRICE	AMOUNT
2200	P. & S. Steel	.03¼	71.50
			71.50

ALL CLAIMS AND RETURNED GOODS MUST BE ACCOMPANIED BY THIS BILL
PLEASE TO REORDER CALL 1-800-443-8336

ATTACHMENT 4

Fluid Disposal Documentation

717/655-0857
717/829-0434
717/822-6731 (FAX)

COREY INC.

CONSTRUCTION • SALES • SERVICE

101 COREY STREET — PLAINS, PA 18702-1818

DATE: 6-30-93

PERSON: Chris O'Neil

COMPANY: R.E. Wright assoc.

FAX NUMBER: 944-5642

RE: tank disposal

FROM: Audrey

COREY, INCORPORATED, 101 COREY STREET, PLAINS, PA. 18702

FAX NUMBER: 822-6731

MESSAGE:

Note:

As per conversation; all fuel removed from tank was by such a good quality is was put in a 55 gallon drum & then pumped and used in our backhoe.

Audrey

IF THERE IS ANY TROUBLE AT YOUR RECEIVER END OF THIS TRANSMITTAL OR IF THE MESSAGE IS UNCLEAR OR INCOMPLETE, PLEASE CALL (717) 829-0434 OR 655-0857.

NUMBER OF PAGES: 2 INCLUDING COVER LETTER.

TANKNOLOGY™
TECHNOLOGY FOR TANKS AND THEIR ENVIRONMENT

MANDATORY Safety Tag & Lock-Out Pre-test and Quality Assurance Post-test Procedure

Customer:	Site#:	Service Order#:
OH SABOLIS MCM. USAF CTR	N/A	88577
Address:	**City/St:**	**ZIP:**
140 STEWARD RD	Ashley, PA	18706

PRE-TEST PROCEDURE:

The following items must be signed for prior to starting tank and / or line testing at site:

1) The station manager understands that PRIOR to FUEL DROPS the Unit Manager must stop testing and place the complete station back into working order.
2) The station manager understands that the pumps, dispensers and electrical supply must stay disabled throughout the test.
3) All associated power breakers have been turned off for testing.
4) Magnetic signs have been placed on power breaker boxes.
5) "Out of Service" bags are on dispenser nozzles.
6) Padlocks are on dispenser nozzles.
7) Check valve is closed.
8) Bayonet connector is disconnected from pump.
9) All safety procedures have been discussed with all station personnel. The Station Manager and Tanknology Unit Manager have each confirmed that the Tag & Lockout procedures are in effect.

The Station Mgr. agrees that the above items were explained and completed prior to the start of Tank and/or Line Testing.

Station Manager Name:	Sta. Mgr.Signature:	DATE:
	James E. Buckley	8-2-93

POST-TEST PROCEDURE:

To insure that your station is fully operational prior to our test-unit departing from your location, PLEASE WITNESS the following items:

1) Each dispenser operates, and all "out-of-service bags & pad-locks were removed.
2) There are NO LEAKS in the sub-pump area, even when the pumps are running.
3) All debris, safety-cones, & magnetic signs have been removed from the work area.
4) All tanks and dispensers were restored to their original state.

The Station Mgr. agrees that the above items were witnessed & completed following the completion of Tank and/or Line Testing.

Station Manager Name:	Sta. Mgr.Signature:	DATE:
	James E. Buckley	8-2-93
Unit Manager Name:	**Unit Mgr. Signature:**	**Date:** 8-2-93
SAI Ringer	Sal Ringer	**Certificate#** 0258

TAK-27

TECHNOLOGY FOR TANKS AND THEIR ENVIRONMENT

Service Order Agreement
VacuTect™ Leak Detection
Reg: 990, 991, 992, 993, 994, 995, 996
Circle One

COPIES

Cust. PO#	TEST DATE 8-2-93	Acc't. Cust. #

Tank Owner _____ Invoice [illegible]
Owner Address _____ Invoice Address [illegible]
[illegible], PA 19111
Owner Name _____ Invoice Contact RICK HERRE
Owner Phone _____ Invoice Phone 215 697-6916
FAX No. _____ FAX No. _____

EXACT LOCATION _____ Facility # _____ SCHEDULED START DATE 8-2-93
OH SPRUCE MEMORIAL USAR CENTER
140 STRUNDS RD
ASHLEY, PA 18706
Start Time: 10:15 End Time: _____
Applicable Specifications: _____

Unit # 54 Testers Cert. # 0258 Agent _____ SO# 088577
Taxable: _____ Message: _____

TANKS TESTED

	Size	Product	Pass/Fail
Tank 1:	1K	#2 F.O.	PASS
Tank 2:	10K	#2 F.O.	PASS
Tank 3:			
Tank 4:			
Tank 5:			
Tank 6:			
Tank 7:			
Tank 8:			
Tank 9:			
Tank 10:			

LINES & LEAK DETECTORS

	Pass/Fail	
Line 1	PASS	Leak Det Test
Line 2	PASS	Leak Det Test
Line 3		Leak Det Test
Line 4		Leak Det Test
Line 5		Leak Det Test
Line 6		Leak Det Test
Line 7		Leak Det Test
Line 8		Leak Det Test
Line 9		Leak Det Test
Line 10		Leak Det Test

Site Survey: $

Helium Leak Detection Service: Start Time _____ End Time _____

PARTS INSTALLED: Quantity _____ Model _____ Red Jacket Leak Detectors
Other Parts _____
Installation Labor:

TANKNOLOGY is authorized to make and will be paid at its commercial rate for making any minor adjustments and repairs to piping and valves necessary. See Standard Terms and Conditions on the reverse side, which are incorporated herein by reference and which are included as part of this agreement. By signing this agreement, you acknowledge you have read, understand and agree to the terms and conditions on the reverse side of this agreement.

ACCEPTED BY:
Name: JAMES E. [illegible]
Title: SAF
For: Customer [illegible] CENTER
Signature: [illegible]
Date: 8-2-93 Time: 10:15 AM

TANKNOLOGY SERVICE DIVISION
Name: SAL [illegible]
Title: [illegible] MANAGER
Signature: _____
Date: 8-2-93
State: _____ License # _____

Printed in the U.S.A.

TANKNOLOGY CORPORATION INTERNATIONAL
5225 Hollister Street • Houston, Texas 77040-6294 • 800-888-8563 • Fax: (713) 690-2255

TAK-03

CUSTOMER

TANKNOLOGY CORPORATION INTERNATIONAL

5225 Hollister, Houston, Texas 77040-6294 Phone (800) 888-8563 FAX (713) 690-2255

Certificate of Tightness

Service Order # 088577 **Test Date** 08/02/93

Underground storage tank system(s) tested and found tight for:

TANK OWNER: 79TH ARCOM

TEST SITE ADDRESS: OH SABALIS MEM. USAR CNTR 140 STEWARD ROAD
ASHLEY, PA

[2] **TANK(S) ONLY,** [4] **LINE(S) ONLY,** [ ] **LEAK DETECTOR(S) ONLY.**

TANK SIZES &
PRODUCTS TESTED

1 1000 HTG OIL 2 10000 HTG OIL

LINES TESTED 1A, 1B, 2A, 2B

LEAK DETECTORS TESTED

Unit Mgr. Certificate Number & Name 258 SALVATORE C. RINGER 02/95

Valid only with Corporate Seal

U.S. Patent #4462249, Canadian Patent #1185693, European Patent Appl. #169283
TANKNOLOGY & VacuTect are trademarks of TANKNOLOGY CORPORATION INTERNATIONAL

Note: See VacuTect Test Report for tank identification and site location drawing.

TAK-04

TANKNOLOGY
TECHNOLOGY FOR TANKS AND THEIR ENVIRONMENT

VacuTect™ TEST REPORT

S.O. # 088577

Date 08/02/93

Owner 79TH ARCOM

Site #

Phone (215) 697-6816

Invoice Name/Address DEFENSE LOGISTICS AGENCY IND. SUPPLY CNTR DISC-EPT 700 ROBBINS AVENUE PHILADELPHIA, PA 19111-5096

Attn: RICK HERPEL

Site Name/Address OH SABALIS MEM. USAR CNTR 140 STEWARD ROAD ASHLEY, PA

TANKS											LINES							Leak Det		
See Diag. For Loc. Tank #	Tank Product	Tank Capacity	Tank Dia. & Material ST/FRP/Lined	Dipped Water Level ■ START END	Dipped Product Level ■ START END	Probe Water Level ■ START END	Water Ingress Detected ■ Yes/No	Bubble Ingress Detected ■ Yes/No	Ullage Air Ingress Detected ■ Yes/No	TANK ■ Tight or Fail	Line #	Line Material ■ ST/FRP	Line Delivery Syst. Type ■ PS/SS/GS	LINE TEST ■ START TIME	LINE TEST ■ END TIME	Final Leak Rate ■ GPH	LINE ■ Tight or Fail	Exist LD(s) Pass/Fail/or NONE	NEW LD(s) Tested & PASS	TANKS and LINES Tested to CFR-40 Parts 280-281 & NFPA 329 Spec's. Other:
1	HTG OIL	1000	Diameter	00.500	038.00	00.670	N	N	N	T	1A	ST	SS	10:25	11:56	0.000	T	-	N	Exist LD SN/MDL/MFG:
			48	00.500	038.00	00.690					1B	CP	GS	10:25	11:56	0.000	T			New/2nd LD SN/MDL/MFG:
			Material ST	Start Time: 10:25 / End Time: 11:56	Percent of Fill at Time of Test: 79.0 / Tank Test PSI: -1.20	Probe Entry:	Pump Mfg.: FILL		Inclinometer Degrees: N/A											LINE TEST PSI: LINE TESTED WITH TANK / Dispenser Shear Valves Operate (yes/no):
2	HTG OIL	10000	Diameter	00.000	070.00	00.160	N	N	N	T	2A	CP	SS	12:07	14:13	0.000	T	-	N	Exist LD SN/MDL/MFG:
			91	00.000	070.00	00.160					2B	CP	GS	12:07	14:13	0.000	T			New/2nd LD SN/MDL/MFG:
			Material FRP	Start Time: 12:07 / End Time: 14:13	Percent of Fill at Time of Test: 76.0 / Tank Test PSI: - .50	Probe Entry:	Pump Mfg.: FILL		Inclinometer Degrees: N/A											LINE TEST PSI: LINE TESTED WITH TANK / Dispenser Shear Valves Operate (yes/no):
			Diameter																	Exist LD SN/MDL/MFG:
																				New/2nd LD SN/MDL/MFG:
			Material	Start Time: / End Time:	Percent of Fill at Time of Test: / Tank Test PSI:	Probe Entry:	Pump Mfg.:		Inclinometer Degrees:											LINE TEST PSI: / Dispenser Shear Valves Operate (yes/no):
			Diameter																	Exist LD SN/MDL/MFG:
																				New/2nd LD SN/MDL/MFG:
			Material	Start Time: / End Time:	Percent of Fill at Time of Test: / Tank Test PSI:	Probe Entry:	Pump Mfg.:		Inclinometer Degrees:											LINE TEST PSI: / Dispenser Shear Valves Operate (yes/no):
			Diameter																	Exist LD SN/MDL/MFG:
																				New/2nd LD SN/MDL/MFG:
			Material	Start Time: / End Time:	Percent of Fill at Time of Test: / Tank Test PSI:	Probe Entry:	Pump Mfg.:		Inclinometer Degrees:											LINE TEST PSI: / Dispenser Shear Valves Operate (yes/no):
			Diameter																	Exist LD SN/MDL/MFG:
																				New/2nd LD SN/MDL/MFG:
			Material	Start Time: / End Time:	Percent of Fill at Time of Test: / Tank Test PSI:	Probe Entry:	Pump Mfg.:		Inclinometer Degrees:											LINE TEST PSI: / Dispenser Shear Valves Operate (yes/no):

TANKNOLOGY Region: NORTH EAST REGION Unit # 054 State Lic. # State: PA

NOTE: Original VacuTect Data recordings are reviewed by Tanknology's Audit Control Department and maintained on file.

TAK-01

Tanknology Corporation Internatior
5225 Hollister St., Houston, TX 77040
(800) 888-8563 • FAX (713) 690-2255

[redacted]

88577 Owner: OH SABALS USAR CENTER Site#

MONITOR WELLS NONE

Well Number	1	2	3	4	5	6	7	8	9	10	11	12
Well Depth												
Depth to Water												
Product Detected AMOUNT in inches												

Standard Symbols for diagram below:

- (V/B) V.R. w / Ball Float
- (B) Ball Float
- [M] Manway
- (F) Fill
- (M) Monitor Well (Outside Tank Bed Area)
- (G) Tank Gauge
- [I] Iron Cross
- (V) Vapor Recovery
- (Δ) Observation Well (Inside Tank Bed Area)
- ( ) Vent
- [T] Turbine

Location Diagram–Include the Vapor Recovery System.

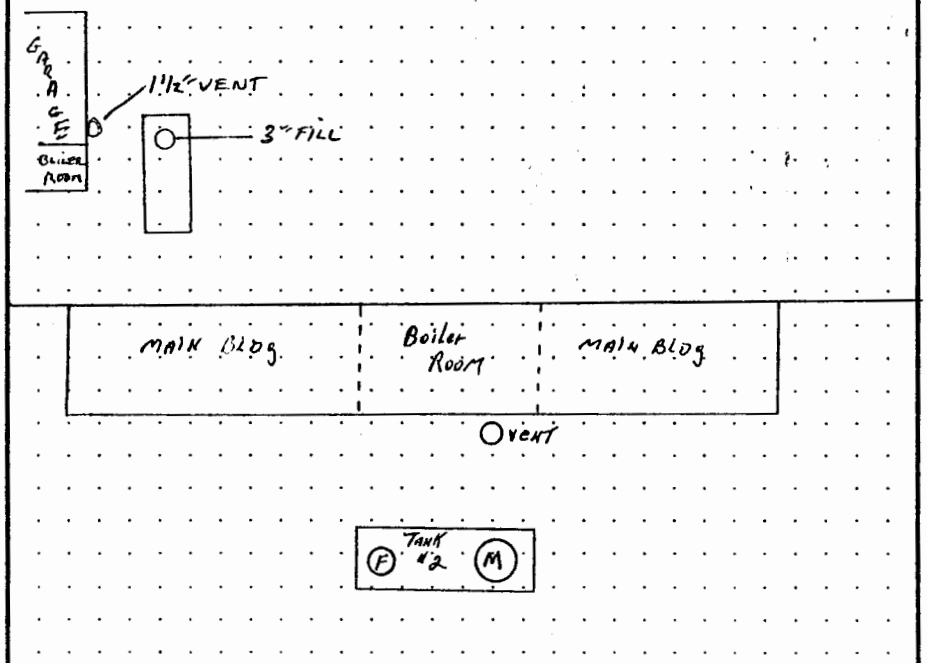

Vapor Recovery System & Vents were tested with which tank?

Parts and Labor used

General Comments

When OWNER or local regulations require immediate reports of system failure–Complete the following:

REPORTED TO:	NAME	DATE	TIME
	Rick Herpel	8-2-93	6:00pm

Phone#	OWNER or Regulatory Agency	FILE NUMBER
215-697-6816	DISC	

Print Certified Testers Name	Vacutect™ Certification Number
SAI Ringer	0258

Certified Testers Signature	Date Testing Completed
Sal Ringer	8-2-93

416TH ENCOM
Ft. Indiantown Gap, PA

Draft Findings Report
Environmental Compliance Assessment for Army Reserves
(ECAAR)

WILKES-BARRE USARC

FFID # PA-210412N75
1001 Highway 315
Wilkes-Barre, Pa.

Site Visit
2-3 November 1993

ECARR Protocol Manual Version Dated
September 1992
was used in the preparation of this report.

This document contains information EXEMPT
FROM MANDATORY DISCLOSURE under FOIA.

FOR OFFICIAL USE ONLY
DRAFT

TABLE OF CONTENTS

Acronym and Abbreviation List i

Glossary of Terms ii

SECTION 1

EXECUTIVE SUMMARY
. . . . . 1 - 1
1.1 SUMMARY OF FINDINGS . . . . . 1 - 2
TABLE 1.1 SUMMARY OF FINDINGS . . . . . 1 - 5

SECTION 2

BACKGROUND AND SCOPE
. . . . . 2 - 6
2.1 BACKGROUND . . . . . 2 - 6
2.2 RESERVE CENTER DESCRIPTION . . . . . 2 - 8
2.3 ENVIRONMENTAL ORGANIZATION . . . . . 2 - 8
2.4 ACTIVITY REVIEW . . . . . 2 - 9

SECTION 3

REGULATORY/STATUTORY FINDINGS
. . . . . 3 - 13

SECTION 4

MANAGEMENT PRACTICES/POLICIES
. . . . . 4 - 28

Acronym and Abbreviation List

AFRC	-	Armed Forces Reserve Center
AHERA	-	Asbestos Hazard Emergency Response Act
CAA	-	Clean Air Act
CERCLA	-	Comprehensive Environmental Response, Compensation, and Liability Act
CFR	-	Code of Federal Regulations
CWA	-	Clean Water Act
DEH	-	Directorate of Engineering and Housing
DMR	-	Discharge Monitoring Act
DOD	-	Department of Defense
ESA	-	Endangered Species Act
EPA	-	Environmental Protection Agency
ECAAR	-	Environmental Compliance Assessment - Army Reserve
FIFRA	-	Federal Insecticide, Fungicide, and Rodenticide Act
FWS	-	Fish and Wildlife Service
GMP	-	Good Management Practice
MEP	-	Military Equipment Parking
MSDS	-	Material Safety Data Sheet
MUSARC	-	Major United States Army Reserve Command
NAAQS	-	National Ambient Air Quality Standards
NEPA	-	National Environmental Policy Act
NFPA	-	National Fire Protection Association
NHPA	-	National Historic Preservation Act
NPDES	-	National Pollution Discharge Elimination System
OMS	-	Organizational Maintenance Shop
PCB	-	Polychlorinated biphenyls
POL	-	Petroleum Oil and Lubricants
POV	-	Privately Owned Vehicle
PPM	-	Parts Per Million
RCRA	-	Resource Conservation and Recovery Act
SARA	-	Superfund Amendments and Reauthorization Act
SCP	-	Spill Contingency Plan
SDWA	-	Safe Drinking Water Act
SHPO	-	State Historic Preservation Officer
SPCCP	-	Spill Prevention, Control and Countermeasure Plan
TCLP	-	Toxic Constituents Leaching Procedure
TSCA	-	Toxic Substances Control Act
TSDF	-	Treatment, Storage, and Disposal Facility
USAR	-	United States Army Reserve
USARC	-	United States Army Reserve Center

UST	-	Underground Storage Tanks
VOC	-	Volatile Organic Compound

Glossary of Terms

FINDING CATEGORIES:

1) Environmental Findings I, II, and III.
2) Health Safety Findings

Class I Findings:

Noncompliance with an existing environmental regulation, compliance agreement, consent order, or operating/discharge permit. These may stem from federal, state, or local requirements.

Class II Findings:

Noncompliance with a future deadline in an environmental regulation, compliance agreement, or consent order. These may stem from federal, state, or local requirements.

Class III Findings:

Findings based on management practices that are not based on regulatory requirements. These include findings based on Army Regulations and DOD directives. Class III findings may be positive or negative.

Health/Safety Findings:

Findings related to OSHA, DOT, and NFPA as shown in requirements column in the ECAS protocol. Most health/safety findings are in the Hazardous Materials section (Section 17) of the protocol. Health safety findings may be regulatory but are not part of the RCS 1383 reporting process and not eligible for any environmental funding. Health/safety findings are not classified I, II, or III.

SECTION 1

EXECUTIVE SUMMARY

This draft findings report presents the results of an environmental compliance assessment conducted by the 416th Engineer Command's Indiantown Gap Facility Engineer (FE) Teams at the Wilkes-Barre USAR Center in Wilkes-Barre, Pennsylvania on 2-3 November 1993. The assessment was done in accordance with the Environmental Compliance Assessment Systems (ECAS). The purpose of this report is to identify environmental compliance problems to the chain of command and to identify alternative corrective actions. This report is intended to provide sufficient information for the chain of command to make informed choices on the appropriate corrective actions for its findings. In particular, it is expected that the support installation commander, through his DEH staff and the ARCOM/MURARC commander will coordinate the selection of these actions. After their review of this Draft Findings Report (DFR), the resultant corrective actions that address all compliance deficiencies are to be communicated to the FE Team. The team will prepare a draft final report containing these corrective actions. The draft final report will then be forwarded to the MACOM for coordination and approval. Concurrent copies will be provided to the support installation and the ARCOM/MACOM.

This Environmental Compliance Assessment has reviewed reserve center activities and conditions. It provides a "snapshot in time" of the center's compliance posture. It does not give a guarantee that a regulator will not find other compliance deficiencies. Instead, it identifies weak areas and a means to correct them without the pressure of a regulatory inspection. ECAS is a proactive program that reviews 17 environmental media listed in table 1-1 and helps the chain of command identify the resources necessary to bring the reserve center into environmental compliance. Along with corrective actions identified by the chain of command, the FE team may assist in developing the necessary resource documents (RCS 1383 exhibits, DA 4283s, and DD 1391s) to feed existing Army resource systems.

This assessment was conducted by:

LTC Francis Strouse
MAJ James Hugar
CPT Andrew Shiner
CPT Joel Hagar
SFC Joseph Baran
SFC Joseph Hollswander
SSG Carl Hilt

1.1 SUMMARY OF FINDINGS

The following text briefly summarizes the findings for each compliance protocol. The protocols are discussed in the order that they appear in the report.

1.2.1 Clean Air Act (CAA)

There were no Class I or Class II findings in this protocol. There were two (2) Class III findings. The facility lacked an emissions inventory report, and a Halon and CFC annual report. There was one negative health/safety finding relating to the high levels of lead contamination in the indoor rifle range. There was one (1) positive finding regarding the proper quarantine of the rifle range.

1.2.2 Clean Water Act (CWA)

There were no Class II findings in this protocol. There were three (3) Class I finding relating to the absence of an oil/water separator in the wash rack, no training in spill prevention and response, and the absence of an SPCC plan. There were four (4) Class III findings about the absence of written procedures for the investigation of water pollution complaints, storm water discharge, management of petroleum products and lack of training on spill prevention.

1.2.3 Safe Drinking Water Act (SDWA)

There were no Class II or III findings in this protocol. There was one (1) Class I finding regarding the absence of backflow preventers.

1.2.4 Resource Conservation and Recovery Act, Subtitle C

There were no Class II findings in this protocol. There were two (2) Class I findings regarding the lack of hazardous materials handlers training. There were four (4) Class III findings. There was no hazardous waste management plan nor a hazmin program established, and lack of inspections and inventories of hazardous materials.

1.2.5 Resource Conservation and Recovery Act, Subtitle D

There were no Class II findings in this protocol. There were three (3) Class I findings relating to recycling and proper contracting for waste haulers. There were two (2) Class III findings. Waste receptacles are not being inspected quarterly and personnel are not informed about proper waste disposal practices.

1.2.6 Resource Conservation and Recovery Act, Subtitle I

There were no Class I or Class III findings. There was one (1) positive Class II finding regarding the removal of a UST.

1.2.7 Comprehensive Environmental Response, Compensation, and Liability Act/Superfund Amendments and Reauthorization Acts (CERCLA/SARA)

There were no Class I or II findings in this protocol. There was one (1) Class III finding for no past screening for past hazardous substances.

1.2.8 Toxic Substance Control Act (TSCA)

There were no Class II or III findings in this protocol. There was one (1) Class I finding relating to the testing for PCB's in pole mounted transformers.

1.2.9 Federal Insecticide, Fungicide, and Rodenticide Act (FIFRA)

There was no Class II or III findings in this protocol. There was one (1) Class I finding relating to no environmental assessment exists on this facility.

1.2.10 Historic Preservation and Cultural Resources

There were no Class I or II findings in this protocol. There were two (2) Class III findings. The facility lacks an inventory of possible historic and/or cultural resources and no survey was conducted.

1.2.11 Endangered Species Act

There were no Class I or Class II findings in this protocol. There were two (2) Class III finding. The facility should maintain records for the facilities land management activities and no resource management plan exists.

1.2.12 National Environmental Policy Act (NEPA)

There were no Class II or Class III findings in this protocol. There were two (2) Class I finding regarding recording of environmental considerations and no environmental assessment exists.

1.2.13 Asbestos Abatement

There were no Class I or Class II findings in this protocol. There were two (2) Class III

findings. The facility did not maintain an asbestos management plan, and there was no asbestos survey by AHERA trained personnel done at the facility.

1.2.14 Noise Abatement

There were no Class I or Class II findings in this protocol. There were three (3) Class III findings. The facility requires an Installation Compatible Use Zone (ICUZ) study and noise study. The facility lacks a noise complaint procedure.

1.2.15 Radon Abatement

There were no Class I or II findings in this protocol. There are two (2) positive findings in that there is long term measurements being performed.

1.2.16 Environmental Program Management

There were no Class I or Class II findings in this protocol. There were four (4) Class III findings. These findings related to the absence of documentation and lack of training.

1.2.17 Hazardous Materials Management

There were no Class II findings in this protocol. There were two (2) Class I findings. No secondary containment for hazardous materials storage areas and lack of proper training in spill response. There were four (4) Class III findings. No hazardous waste master list, and no hazmin program. The facility is not coordinated with local fire department on the contents and location of hazardous materials and flammable materials are improperly stored. There was one (1) H/S finding regarding the absence of MSDS's.

TABLE 1.1 SUMMARY OF FINDINGS

INSTALLATION: WILKES-BARRE USARC Fiscal Year: 1994
FFID: PA-210412N75

SECTION NO.	TITLE	REGULATORY 1	REGULATORY 2	REGULATORY HS	MANAGEMENT POS	MANAGEMENT 3	MANAGEMENT HS
1	Clean Air Act	0	0	1	1	2	0
2	Clean Water Act	3	0	0	0	3	0
3	Safe Drinking Water Act	1	0	0	0	0	0
4	RCRA-C	2	0	0	0	4	0
5	RCRA-D	3	0	0	0	2	0
6	RCRA-I	0	0	0	1	0	0
7	CERCLA/SARA	0	0	0	0	1	0
8	TSCA	1	0	0	0	0	0
9	FIFRA	0	0	0	0	0	0
10	Historic Preservation	0	0	0	0	1	0
11	Endangered Species Act	0	0	0	0	1	0
12	NEPA	2	0	0	0	0	0
13	Asbestos	0	0	0	0	2	0
14	Noise Abatement	0	0	0	0	3	0
15	Radon Program	0	0	0	2	0	0
16	Environmental Program	0	0	0	0	4	0
17	Hazardous Materials Mgmt.	2	0	1	0	4	0
TOTALS		14	0	2	4	27	0

Data File Name Prefix: C:\ECAS\DATA\2N751G
Date Summary Report Produced: 11/03/93

SECTION 2

BACKGROUND AND SCOPE

This section presents the background and scope for the environmental compliance assessment conducted at the Wilkes-Barre USAR Center in Wilkes-Barre, Pennsylvania.

2.1 BACKGROUND

The background section presents the objectives of the ECAAR program, a description of the facility and its management structure.

ECAAR Objectives

The objectives of ECAAR are to:

- establish the use of environmental compliance assessments as a means of ensuring the Army's compliance with all applicable Federal, State, Local, and Army environmental laws and regulations.

- assure major commands, facility commanders, environmental quality control committees, environmental coordinators, DEH personnel, and natural resource managers that their environmental programs are effectively addressing environmental problems that could:

  - impact mission effectiveness
  - jeopardize the health of facility personnel or the public
  - significantly degrade the environment
  - expose the Army and its people to avoidable financial liabilities because of non-compliance with environmental requirements
  - erode public confidence in the Army and the defense establishment
  - expose individuals to civil and criminal liability.

- secure information that will allow facility commanders to anticipate and prevent future environmental problems.

- enhance management by establishing a system for environmental compliance management

- provide data for use in identifying, programming, and budgeting environmental requirements

- provide accurate and complete information on the status of facility environmental compliance programs.

2.2 RESERVE CENTER DESCRIPTION

The Wilkes-Barre USAR Center is located at 1001 Highway 315, off Interstate 81, exit 47 West on approximately 6 acres of land in Wilkes Barre, Pa. and was constructed in 1955. The main building and maintenance shop consists of cinder block and structural steel, slab on grade. The center building has a partial basement, boiler room and coal storage rooms. The main building is "T" shaped with approximately 23,122 square feet. The Maintenance shop was built in 1959 and has approximately 3,750 square feet.

The real property holder and supporting installation are Fort Indiantown Gap, Pennsylvania. The using MUSARC is the 79th ARCOM. The units and members of assigned personnel using the facility are as follows:

USAR Unit	Assigned Personnel
HSD, 365 Engr Bn.	115
Trp C, 9 Cav.	112
TOTAL	227

2.3 ENVIRONMENTAL ORGANIZATION

Management of the environmental mission is a shared responsibility led by the Commander. We found that most of the environmental categories covered during the ECAAR review are principally managed by the Fort Indiantown Gap Environmental Coordinator and the 79th ARCOM Engineer staff.

Hazardous Materials Management issues are implemented by several organizations including the Directorate of Engineering and Housing, the Fire Department, and the individual shops that store and use hazardous materials.

The facility Commander and his staff are responsible for carrying out site specific requirements under direction of their higher headquarters. The following text briefly summarizes the findings for each compliance protocol. The protocols are discussed in the order that they appear in the report.

2.4 ACTIVITY REVIEW

2.4.1 Clean Air Act (CAA)

The air emission sources reviewed included the following:

- Natural gas powered heat plant that services both buildings on site
- Indoor rifle range in main building

2.4.2 Clean Water Act (CWA)

The water pollution sources reviewed included the following:

- Parking lot drainage system

2.4.3 Safe Drinking Water Act (SDWA)

The sources reviewed include the following:

- Potable water system
- Boiler make-up water system

2.4.4 Resource Conservation and Recovery Act, Subtitle C (RCRA-C)

The RCRA-C areas reviewed includes the following:

- Unit storage areas in the main building
- Unit storage areas in the maintenance building
- Storage areas in the maintenance building
- Flammable material storage shed

2.4.5 Resource Conservation and Recovery Act, Subtitle D (RCRA-D)

The RCRA-D areas reviewed included:

- Contract documents for solid waste removal
- Solid waste collection areas

In addition, the municipal solid waste/recycling authority was a source of information.

2.4.6 Resource Conservation and Recovery Act, Subtitle I (RCRA-I)

The RCRA-I records reviewed includes the following:

- Facility Records
- Facility Drawings

In addition, the Facility Manager and Installation Environmental Coordinator were interviewed and all buildings and grounds were examined.

2.4.7 Comprehensive Environmental Response, Compensation, and Liability Act/Superfund Amendments and Reauthorization Acts (CERCLA/SARA)

The CERCLA/SARA areas reviewed include the following:

- Facility Records
- Facility Drawings

In addition, the Facility Manager and Installation Environmental Coordinator were interviewed and all buildings and grounds were examined.

2.4.8 Toxic Substance Control Act (TSCA)

The TSCA areas reviewed includes the following:

- Main building
- Maintenance building
- Flammable material storage shed

2.4.9 Federal Insecticide, Fungicide, and Rodenticide Act (FIFRA)

The FIFRA areas reviewed include the following:

- Main building
- Maintenance building
- Flammable material storage shed
- Fence/property line
- Parking lot

The Installation Environmental Coordinator and Facility Manager were the sources of pre-site-visit information.

2.4.10 National Historic Preservation Act

The National Historic Preservation areas reviewed included all the buildings and grounds.

2.4.11 Endangered Species Act

The Endangered Species areas reviewed included all the buildings and grounds.

2.4.12 National Environmental Policy Act (NEPA)

The NEPA areas reviewed include all of the buildings and grounds and discussions with the Installation Environmental and Real property office.

2.4.13 Asbestos Abatement

The Asbestos Abatement areas reviewed included the following:

- Main building
- Maintenance building
- Flammable material storage shed

The Installation Environmental Coordinator and Facility Manager were the sources of pre-site-visit information.

2.4.14 Noise Abatement

The Noise Abatement areas reviewed included the following:

- Main building
- Maintenance building
- Flammable material storage shed

The Installation Environmental Coordinator, Municipal Manager, and Facility Manager were the sources of pre-site-visit information.

2.4.15 Radon Abatement

The Radon Abatement areas reviewed included the following:

- Main building
- Maintenance building
- Flammable material storage shed

The Installation Environmental Coordinator and Facility Manager were the sources of pre-site-visit information.

2.4.16 Environmental Program Management

The Environmental Program Management areas reviewed included the following:

- Records and documents were observed
- Facility Manager was interviewed

2.4.17 Hazardous Materials Management

The hazardous materials management areas reviewed included the following:

- Unit storage areas in the main building
- Unit storage areas in the maintenance building
- Storage areas in the maintenance building
- Flammable storage areas in the OMS building

Applicable Regulations

The ECAAR manual and the regulations of the State of Pennsylvania were used as the basis for the environmental assessment of the Wilkes Barre USARC . All compliance standards used as the basis for this report were drawn from those documents.

Evaluation Procedures

The environmental assessment included a review of facility environmental documentation and inspection of the facility by the assessment team. Personnel interviews were used to provide information. No physical samples were collected at the facility.

SECTION 3

REGULATORY/STATUTORY FINDINGS

This chapter describes all statutory/regulatory findings (federal, state, or local) found during the assessment and offers a single or alternative corrective actions for each. The findings are categorized by ECAAR Manual section number and as environmental or health/safety findings. Environmental findings are further categorized as Class I, II, or III for input to the RCS 1383 system.

1-51.1 HS ARMY/DOD FINDING CAA
MANUAL QUESTION NUMBER: 01-051 FINDING ID: U4-0151
FINDING CATEGORY: HEALTH/SAFETY
FINDING TYPE: Negative EXISTING NOV: NO
LOCATION: INDOOR FIRING RANGE
IFS FACILITY NUMBER:
FACILITY TYPE: USARC(MB) - U.S. ARMY RESERVE CENTER - MAIN BLDG

FINDING DESCRIPTION: A detailed inspection, conducted to ensure compliance with current health and safety standards in the indoor firing range found lead levels in excess of the OSHA recommended remedial level. This area was used as a locker room.

CRITERIA: Lead exposure must be controlled at indoor firing ranges. (29 CFR 1910.1025 and AR 385-63)

FINDING COMMENTS: Remediation is scheduled to begin November 8, 1993.

SUGGESTED/ALTERNATIVE CORRECTIVE ACTION(S): Keep range closed and off limits to avoid possible further exposure. Take appropriate remedial action as required.

STATUS OF CORRECTION:

REVIEWER'SCOMMENTS: Sanitized 25 May 1994.

NAME: [signature] DATE: 21 Nov 95

2-10.1 I ARMY/DOD FINDING CWA
MANUAL QUESTION NUMBER: 02-010 FINDING ID: U4-0203
FINDING CATEGORY: CLASS I
FINDING TYPE: Negative EXISTING NOV: NO
LOCATION: INSTALLATION WASH RACK
IFS FACILITY NUMBER:
FACILITY TYPE: USARC(MB) - U.S. ARMY RESERVE CENTER - MAIN BLDG

FINDING DESCRIPTION: No oil/water separator in the wash rack.

CRITERIA: Facilities shall not introduce specific pollutants into POTW (40 CFR 403.5 (b)).

FINDING COMMENTS: Have design for oil/water separator and contract to install oil/water separator.

SUGGESTED/ALTERNATIVE CORRECTIVE ACTION(S): Install oil/water separator at the wash rack.

STATUS OF CORRECTION:

REVIEWER'SCOMMENTS: Oil Water Separator

NAME: [illegible] DATE: 22 Nov 95

2-43.1 I ARMY/DOD FINDING CWA
MANUAL QUESTION NUMBER: 02-043 FINDING ID: U4-0243
FINDING CATEGORY: CLASS I
FINDING TYPE: Negative EXISTING NOV: NO
LOCATION: INSTALLATION WIDE
IFS FACILITY NUMBER:
FACILITY TYPE: USARC(MB) - U.S. ARMY RESERVE CENTER - MAIN BLDG

FINDING DESCRIPTION: No SPCC Plan nor ISCP have been prepared.

CRITERIA: Army Reserve facilities that store, transport, or dispense petroleum products are required to prepare, according to guidelines, a SPCC Plan and an ISCP. (40 CFR 112.3(a), 112.7, DoD Directive 5030.41, para. D, and AR 200-1, para. 8-4 and 8-5a through 8-5c)

FINDING COMMENTS:

SUGGESTED/ALTERNATIVE CORRECTIVE ACTION(S): The SPCC Plan and ISCP are under contract and are to be completed in FY94.

STATUS OF CORRECTION:

REVIEWER'SCOMMENTS: Exemption letter prepared by EA Engineering, Science and Technology, September 1995

NAME: [illegible] DATE: 21 Nov 95

2-51.1 I ARMY/DOD FINDING CWA
MANUAL QUESTION NUMBER: 02-051 FINDING ID: U4-0251
FINDING CATEGORY: CLASS I
FINDING TYPE: Negative EXISTING NOV: NO
LOCATION: INSTALLATION WIDE
IFS FACILITY NUMBER:
FACILITY TYPE: USARC(MB) - U.S. ARMY RESERVE CENTER - MAIN BLDG

FINDING DESCRIPTION: No training in spill prevention and response.

CRITERIA: All facility personnel involved with the management and handling of oil and hazardous substances must take part in periodic training in spill prevention and response. (40 CFR 112.7(e)(10), and AR 200-1, para. 8-5d(2))

FINDING COMMENTS:

SUGGESTED/ALTERNATIVE CORRECTIVE ACTION(S): Training has to be conducted for handling of oil and hazardous substance in spill prevention and response.

STATUS OF CORRECTION:

REVIEWER'SCOMMENTS: Hazardous Waste Management Plan prepared by EA Engineering, Science and Technology, July 1995

NAME: [illegible] DATE: 21 Nov 95

3-3.1 I ARMY/DOD FINDING SDWA
MANUAL QUESTION NUMBER: 03-003 FINDING ID: U4-0303
FINDING CATEGORY: CLASS I
FINDING TYPE: Negative EXISTING NOV: NO
LOCATION: INSTALLATION WIDE
IFS FACILITY NUMBER:
FACILITY TYPE: OMS - ORGANIZATIONAL MAINTENANCE SHOP

FINDING DESCRIPTION: There is no backflow preventer on the 3" and 1" main distribution line into the main building and OMS respectively. The slop sink in Room 213 janitor closet and three hose bib connections in the OMS also require back flow preventers.

CRITERIA: Facilities are required to comply with all applicable state and local regulations. (AR 200-1; para 1-39a(3))

FINDING COMMENTS:

SUGGESTED/ALTERNATIVE CORRECTIVE ACTION(S): Work order to initiate contract to complete installation of backflow preventers on main lines. Obtain hose bib backflow preventers and install.

STATUS OF CORRECTION:

REVIEWER'SCOMMENTS: Contract # DAKF36-95-W-2666, WR # U4-00022-4-J Estimated completion October 1995

NAME: Harry C Bleckley DATE: 21 Nov 95

4-25.1 I ARMY/DOD FINDING RCRA_C
MANUAL QUESTION NUMBER: 04-025 FINDING ID: U4-0425
FINDING CATEGORY: CLASS I
FINDING TYPE: Negative EXISTING NOV: NO
LOCATION: INSTALLATION WIDE
IFS FACILITY NUMBER:
FACILITY TYPE: USARC(MB) - U.S. ARMY RESERVE CENTER - MAIN BLDG

FINDING DESCRIPTION: Evidence of proper training for individuals who handle hazardous waste does not exist.

CRITERIA: All facility personnel who handle hazardous waste must meet certain training requirements. (40 CFR 264.16(a) through 264.16(c) and 40 CFR 265.16(a) through 265.16(c))

FINDING COMMENTS:

SUGGESTED/ALTERNATIVE CORRECTIVE ACTION(S): Develop training program and incorporate it for individuals involved with Haz Mat Management Plan and hazardous waste material handling. Also investigate if C.F.R. identifies need for handlers to have or be on medical surveillance program.

STATUS OF CORRECTION:

REVIEWER'SCOMMENTS: Facility requirement request training and funding for personnel.

NAME: [signature] DATE: 21 Nov 95

4-26.1 I ARMY/DOD FINDING RCRA_C
MANUAL QUESTION NUMBER: 04-026 FINDING ID: U4-0426
FINDING CATEGORY: CLASS I
FINDING TYPE: Negative EXISTING NOV: NO
LOCATION: INSTALLATION WIDE
IFS FACILITY NUMBER:
FACILITY TYPE: USARC(MB) - U.S. ARMY RESERVE CENTER - MAIN BLDG

FINDING DESCRIPTION: No training records for managers involved with hazardous materials and waste.

CRITERIA: Training records must be maintained for all facility staff who manage hazardous waste. (40 CFR 264.16(d) and 264.16(e) plus 40 CFR 265.1(d) and 265.16(e))

FINDING COMMENTS:

SUGGESTED/ALTERNATIVE CORRECTIVE ACTION(S): Develop training program and incorporate it for individuals involved with Haz Mat management.

STATUS OF CORRECTION:

REVIEWER'SCOMMENTS: Facility responsibility - Maintain records and request training for individuals involved.

NAME: [illegible] DATE: 21 Nov 95

5-4.1 I LOCAL FINDING RCRA_D
MANUAL QUESTION NUMBER: 05-004 FINDING ID: U4-0504
FINDING CATEGORY: CLASS I
FINDING TYPE: Negative EXISTING NOV: NO
LOCATION: INSTALLATION WIDE
IFS FACILITY NUMBER:
FACILITY TYPE: USARC(MB) - U.S. ARMY RESERVE CENTER - MAIN BLDG

FINDING DESCRIPTION: Plains Township requires commercial establishments to develop a program to separate all of the materials designated which include high grade office paper, steel, bi-metal, aluminum cans, all plastic bottles with recycling label, glass and newspaper.

CRITERIA: Army facilities are required to participate in any state or local recycling programs and to reduce the volume of solid waste materials at the source whenever practical. (DoD 4165.60, para. V(a), V(c), and V(h), and AR 200-1, para. 6-14a)

FINDING COMMENTS: Pickup is the last Friday of every month. Plastic, cans, and glass can be combined in one container. Newspapers must be bundled. High grade paper should be collected separately and be placed in boxes or a furnished container. The township will furnish 30 gallon blue recycling containers in the quantity required.

SUGGESTED/ALTERNATIVE CORRECTIVE ACTION(S): Develop a plan for internal separation, collection, and pickup. Prepare, if necessary, adequate modification requests for contract collect recycled materials as part of the custodial contract. Procure any necessary special collection containers.

STATUS OF CORRECTION:

REVIEWER'SCOMMENTS: facility responsibility coordinate with Plains Township officials

NAME: Harry [illegible] DATE: 21 Nov 95

5-13.1 I FEDERAL FINDING RCRA_D
MANUAL QUESTION NUMBER: 05-013 FINDING ID: U4-0513
FINDING CATEGORY: CLASS I
FINDING TYPE: Negative EXISTING NOV: NO
LOCATION: INSTALLATION WIDE
IFS FACILITY NUMBER:
FACILITY TYPE: USARC(MB) - U.S. ARMY RESERVE CENTER - MAIN BLDG

FINDING DESCRIPTION: Contract documents do not require the vehicles used for the collections and transportation of solid wastes to meet applicable standards of 49CFR parts 360 through 396-motor carrier safety standards; 40CFR part 202-Noise safety standards for motor carries engaged in interstate commerce.

CRITERIA: Facilities are required to maintain collection equipment according to certain standards. (40 CFR 243.202-1(a), DoD Directive 4165.60, para. V(A), and AR 420-47, para. 3-6a)

FINDING COMMENTS:

SUGGESTED/ALTERNATIVE CORRECTIVE ACTION(S): Require the waste hauler to comply with the applicable portions of these CFR's.

STATUS OF CORRECTION:

REVIEWER'SCOMMENTS: facility responsibility Amend existing contract with waste hauler in order to comply with local, state and federal regulations

NAME: [signature] DATE: 21 Nov 95

5-14.1 I FEDERAL FINDING RCRA_D
MANUAL QUESTION NUMBER: 05-014 FINDING ID: U4-0514
FINDING CATEGORY: CLASS I
FINDING TYPE: Negative EXISTING NOV: NO
LOCATION: INSTALLATION WIDE
IFS FACILITY NUMBER:
FACILITY TYPE: USARC(MB) - U.S. ARMY RESERVE CENTER - MAIN BLDG

FINDING DESCRIPTION: Contract documents do not require the equipment to be operated and maintained adequately and to meet the standards established by the American National Standards Institute.

CRITERIA: All collection equipment is required to meet specific criteria. (40 CFR 243.202-1(b), 243.202-1(c), DoD Directive 4165.60, para. V(A), and AR 420-47, para. 3-6b through para. 3-6d)

FINDING COMMENTS:

SUGGESTED/ALTERNATIVE CORRECTIVE ACTION(S): Require the waste hauler to provide adequate equipment through the contract documents.

STATUS OF CORRECTION:

REVIEWER'SCOMMENTS: See Finding ID U4-0513, pg 3-22.

NAME: [illegible] DATE: 21 Nov 95

8-14.1 I ARMY/DOD FINDING TSCA
MANUAL QUESTION NUMBER: 08-014 FINDING ID: U4-0814
FINDING CATEGORY: CLASS I
FINDING TYPE: Negative EXISTING NOV: NO
LOCATION: INSTALLATION WIDE
IFS FACILITY NUMBER:
FACILITY TYPE: USARC(MB) - U.S. ARMY RESERVE CENTER - MAIN BLDG

FINDING DESCRIPTION: Real property records indicate that the transformers are government property. The existing transformers appear to be new and may have been replaced by the utility.

CRITERIA: Inspections must be performed once every 3 months for all in-service PCB Transformers (500 ppm or greater PCB). (40 CFR 761.30(a)(1)(ix,xiii,x))

FINDING COMMENTS: The 79th ARCOM has requested that the COE sample and test transformers. PP&L does not feel that, based on supply records), none of their transformers contain PCB's.

SUGGESTED/ALTERNATIVE CORRECTIVE ACTION(S): The ownership of the transformers should first be established. The transformer should then be tested if government owned.

STATUS OF CORRECTION:

REVIEWER'SCOMMENTS: Utility owned transformers as per Draft PCB Report for PA by USACOE-Baltimore July 1995.

NAME: Harry L Blackburn DATE: 21 Nov 95

. ? 1 III ARMY/DOD FINDING NEPA
UAL QUESTION NUMBER: 12-008 FINDING ID: U4-1208
. INDING CATEGORY: CLASS I
FINDING TYPE: Negative EXISTING NOV: NO
LOCATION: INSTALLATION WIDE
IFS FACILITY NUMBER:
FACILITY TYPE: USARC(MB) - U.S. ARMY RESERVE CENTER - MAIN BLDG

FINDING DESCRIPTION: No documentation was found to indicate that proper environmental consideration was given to proposed activities at the facility, which may have qualified for a Categorical Exclusion (CX's).

CRITERIA: Categorical Exclusions (CXs) may apply to proposed actions, exempting them from further environmental assessment under specific circumstances. (40 CFR 1501.3 and AR 200-2, para. 4-1 through para. 4-4)

FINDING COMMENTS: The 79th ARCOM has received funding from USARC to provide .egorical exclusions (CX). This is expected to be completed in FY94.

SUGGESTED/ALTERNATIVE CORRECTIVE ACTION(S): Train facility environmental coordinator to assess proposed actions IAW current NEPA and Army regulations. Establish a SOP for documenting environmental assessment of proposed activities.

STATUS OF CORRECTION:

REVIEWER'SCOMMENTS: Catagoncal Exclusion with REC's for various projects

.AME: [signature] DATE: 21 Nov 95

12-9.1 III ARMY/DOD FINDING NEPA
MANUAL QUESTION NUMBER: 12-009 FINDING ID: U4-1209
FINDING CATEGORY: CLASS I
FINDING TYPE: Negative EXISTING NOV: NO
LOCATION: INSTALLATION WIDE
IFS FACILITY NUMBER:
FACILITY TYPE: USARC(MB) - U.S. ARMY RESERVE CENTER - MAIN BLDG

FINDING DESCRIPTION: No environmental assessment exists on this facility.

CRITERIA: Certain actions require the preparation of an EA. (40 CFR 1501.2 and AR 200-2, para. 5-2 and 5-3)

FINDING COMMENTS:

SUGGESTED/ALTERNATIVE CORRECTIVE ACTION(S): Perform a separate environmental assessment or utilize the 416th ENCOM ECARR and prepare an update/new categorical exclusion for the facility.

STATUS OF CORRECTION:

REVIEWER'SCOMMENTS: 79TH Programmatic Environment Assessment prepared by USACOE-Baltimore, October 1994.

NAME: Harry C Blocker DATE: 21 Nov 95

17-5.1 HS ARMY/DOD FINDING HAZMAT
MANUAL QUESTION NUMBER: 17-005 FINDING ID: U4-1705
FINDING CATEGORY: HEALTH/SAFETY
FINDING TYPE: Negative EXISTING NOV: NO
LOCATION: INSTALLATION WIDE
IFS FACILITY NUMBER:
FACILITY TYPE: USARC(MB) - U.S. ARMY RESERVE CENTER - MAIN BLDG

FINDING DESCRIPTION: No MSDS sheets were available for inspection.

CRITERIA: Material Safety Data Sheets (MSDS) are required for each chemical procured or stored at the facility. (29 CFR 1910.1200, AR 200-1, para. 5-1g(8))

FINDING COMMENTS: Personnel should review MSDS's before handling hazardous materials and/or wastes.

SUGGESTED/ALTERNATIVE CORRECTIVE ACTION(S): Ensure that all MSDS's are delivered with supplies.

STATUS OF CORRECTION:

REVIEWER'SCOMMENTS: MSDS' sheets are available through DPW-E upon request Inventory to be conducted 5 Dec 95.

NAME: [signature] DATE: 21 Nov 95

17-6.1 I ARMY/DOD FINDING HAZMAT
MANUAL QUESTION NUMBER: 17-006 FINDING ID: U4-1706
FINDING CATEGORY: CLASS I
FINDING TYPE: Negative EXISTING NOV: NO
LOCATION: INSTALLATION WIDE
IFS FACILITY NUMBER:
FACILITY TYPE: USARC(MB) - U.S. ARMY RESERVE CENTER - MAIN BLDG

FINDING DESCRIPTION: Personnel are not trained in spill response.

CRITERIA: Personnel who manage, use, store, and/or ultimately dispose of hazardous materials must be trained in spill response actions. (40 CFR 112.7e(10), AR 200-1, para. 5-1a(5))

FINDING COMMENTS:

SUGGESTED/ALTERNATIVE CORRECTIVE ACTION(S): All personnel involved with hazardous materials and oil products should be trained in spill prevention.

STATUS OF CORRECTION:

REVIEWER'SCOMMENTS: Facility responsibility Train/name personnel to be trained.

NAME: [signature] DATE: 21 Nov 95

17-17.1 I ARMY/DOD FINDING HAZMAT
MANUAL QUESTION NUMBER: 17-017 FINDING ID: U4-1711
FINDING CATEGORY: CLASS I
FINDING TYPE: Negative EXISTING NOV: NO
LOCATION: INSTALLATION WIDE
IFS FACILITY NUMBER:
FACILITY TYPE: USARC(MB) - U.S. ARMY RESERVE CENTER - MAIN BLDG

FINDING DESCRIPTION: Storage areas for hazardous materials and hazardous waste and oil products do not afford secondary containment.

CRITERIA: Indoor storage rooms for flammable/combustible materials must meet certain specifications. (29 CFR 1910.106(d)(4) and DoD Directive 4145.19-R-1, para 5-40c)

FINDING COMMENTS:

SUGGESTED/ALTERNATIVE CORRECTIVE ACTION(S): Utilize drum pallet included with spill kits or request other containment. Request training on spill kits.

STATUS OF CORRECTION:

REVIEWER'SCOMMENTS: Spill containment order issued Nov 1993.

NAME: [signature] DATE: 21 Nov 95

SECTION 4

MANAGEMENT PRACTICES/POLICIES

This chapter describes all management practice (non-statutory or non-regulatory) findings found during the assessment and suggests single or alternate corrective actions for each. Both environmental and health/safety management practice findings are detailed here. Positive and negative findings are included.

All non-regulatory environmental findings are categorized class III and include deviations from Army regulations, DOD Directives, or any other good common sense management practice. Class III findings also stem from obsolete operations that are not out of compliance or cases where expansion is likely to cause noncompliance.

1-4.1 III ARMY/DOD FINDING CAA
MANUAL QUESTION NUMBER: 01-004 FINDING ID: U4-0104
FINDING CATEGORY: CLASS III
FINDING TYPE: Negative EXISTING NOV: NO
LOCATION: INSTALLATION WIDE
IFS FACILITY NUMBER:
FACILITY TYPE: USARC(MB) - U.S. ARMY RESERVE CENTER - MAIN BLDG

FINDING DESCRIPTION: The facility does not have an air pollution emissions inventory.

CRITERIA: Preventive Medicine personnel at each installation are required to conduct and maintain an up-to-date emissions inventory listing all stationary sources of air pollution and inspect stationary air pollution sources periodically to assess compliance with applicable standards. (AR 40-5, para. 11-4b)

FINDING COMMENTS:

SUGGESTED/ALTERNATIVE CORRECTIVE ACTION(S): Initiate an inventory of all sources of air pollution, estimate the total emissions for each, and prepare and maintain an inventory report.

STATUS OF CORRECTION:

REVIEWER'SCOMMENTS: Facility responsibility air emissions are negligible. A list will be prepared.

NAME: [signature] DATE: 21 Nov 95

1-46.1 III ARMY/DOD FINDING CAA
MANUAL QUESTION NUMBER: 01-046 FINDING ID: U4-0146
FINDING CATEGORY: CLASS III
FINDING TYPE: Negative EXISTING NOV: NO
LOCATION: INSTALLATION WIDE
IFS FACILITY NUMBER:
FACILITY TYPE: USARC(MB) - U.S. ARMY RESERVE CENTER - MAIN BLDG

FINDING DESCRIPTION: CFC's are suspected to be present in the refrigeration equipment. No CFC and Halon Annual Report was available.

CRITERIA: Installations that procure and store chlorofluorocarbons (CFCs) and halons for mission critical applications, when substitutes are not available, or use them to service equipment, are required to produce a CFC and Halon Annual Report. (DoD Directive 6050.9, para. E3)

FINDING COMMENTS: There are two commercial refrigerators in the drill hall and one in the supply room. It is unknown if CFC's are present in these appliances.

SUGGESTED/ALTERNATIVE CORRECTIVE ACTION(S): Prepare and forward a Chlorofluorcarbon and Halon Annual Report as required by DOD Directive 6050.9.

STATUS OF CORRECTION:

REVIEWER'SCOMMENTS: CFC/Halon inventory conducted 11 April 1994.

NAME: [signature] DATE: 21 Nov 95

1-51.1 POSITIVE ARMY/DOD FINDING CAA
MANUAL QUESTION NUMBER: 01-051 FINDING ID: U4-0151-2
FINDING CATEGORY: POSITIVE
FINDING TYPE: Positive EXISTING NOV: NO
LOCATION: INDOOR FIRING RANGE
IFS FACILITY NUMBER:
FACILITY TYPE: USARC(MB) - U.S. ARMY RESERVE CENTER - MAIN BLDG

FINDING DESCRIPTION: The facility has locked and posted restricted access signs at the entry of the indoor firing range. The range is contaminated with lead dust.

CRITERIA: Lead exposure must be controlled at indoor firing ranges. (29 CFR 1910.1025 and AR 385-63)

FINDING COMMENTS:

SUGGESTED/ALTERNATIVE CORRECTIVE ACTION(S):

STATUS OF CORRECTION: Completed

REVIEWER'SCOMMENTS: Sanitized May 25, 1994

NAME: [illegible] DATE: 21 Nov 95

2-4.1 III ARMY/DOD FINDING CWA
MANUAL QUESTION NUMBER: 02-004 FINDING ID: U4-0204
FINDING CATEGORY: CLASS III
FINDING TYPE: Negative EXISTING NOV: NO
LOCATION: INSTALLATION WIDE
IFS FACILITY NUMBER:
FACILITY TYPE: USARC(MB) - U.S. ARMY RESERVE CENTER - MAIN BLDG

FINDING DESCRIPTION: Noncompliance with existing regulation, no system for investigating water pollution complaints.

CRITERIA: Each facility is required to have a system for investigating water pollution complaints and allegations from individuals and water pollution control authorities. (AR 200-1, para. 3-3g[1] and [2])

FINDING COMMENTS:

SUGGESTED/ALTERNATIVE CORRECTIVE ACTION(S): Establish a SOP for handling complaints and allegations and institute and audit/record procedure.

STATUS OF CORRECTION:

REVIEWER'SCOMMENTS: Facility responsibility: Facility is on municiple water system.

NAME: Harry A Blake DATE: 21 Nov 95

2-15.1 III ARMY/DOD FINDING CWA
MANUAL QUESTION NUMBER: 02-015 FINDING ID: U4-0215
FINDING CATEGORY: CLASS III
FINDING TYPE: Negative EXISTING NOV: NO
LOCATION: INSTALLATION WIDE
IFS FACILITY NUMBER:
FACILITY TYPE: USARC(MB) - U.S. ARMY RESERVE CENTER - MAIN BLDG

FINDING DESCRIPTION: There is no surveillance of storm water discharges.

CRITERIA: Even where not covered by NPDES permit, stormwater discharged on the facility should be uncontaminated and periodic surveillance of these discharges should be completed. (GMP)

FINDING COMMENTS:

SUGGESTED/ALTERNATIVE CORRECTIVE ACTION(S): Publish an SOP and conduct periodic surveillance of discharges.

STATUS OF CORRECTION:

REVIEWER'SCOMMENTS: Exemption letter for SPPP by EA Engineering, Science and Technology, September 1995

NAME: [signature] DATE: 21 Nov 95

2-50.1 III ARMY/DOD FINDING CWA
MANUAL QUESTION NUMBER: 02-050 FINDING ID: U4-0250
FINDING CATEGORY: CLASS III
FINDING TYPE: Negative EXISTING NOV: NO
LOCATION: INSTALLATION WIDE
IFS FACILITY NUMBER:
FACILITY TYPE: USARC(MB) - U.S. ARMY RESERVE CENTER - MAIN BLDG

FINDING DESCRIPTION: The facility does not have a plan for the management of reclaimed, recoverable, and waste liquid petroleum products.

CRITERIA: Facilities should have a plan for the management of reclaimed, recoverable, and waste liquid petroleum products. (GMP)

FINDING COMMENTS:

SUGGESTED/ALTERNATIVE CORRECTIVE ACTION(S): Inact a plan for the management of reclaimed, recoverable, and waste liquid petroleum products.

STATUS OF CORRECTION:

REVIEWER'SCOMMENTS: Contract with Hazelton Salvage Co to remove waste petroleum products

NAME: [signature] DATE: 21 Nov 95

4-4.1 III ARMY/DOD FINDING RCRA_C
MANUAL QUESTION NUMBER: 04-004 FINDING ID: U4-0404
FINDING CATEGORY: CLASS III
FINDING TYPE: Negative EXISTING NOV: NO
LOCATION: INSTALLATION WIDE
IFS FACILITY NUMBER:
FACILITY TYPE: USARC(MB) - U.S. ARMY RESERVE CENTER - MAIN BLDG

FINDING DESCRIPTION: There is no evidence of a site specific hazardous waste management plan.

CRITERIA: Each facility will have a written hazardous waste management plan. (AR 200-1, para. 6-4b)

FINDING COMMENTS:

SUGGESTED/ALTERNATIVE CORRECTIVE ACTION(S): The 79th ARCOM should develop a generic Hazardous Materials Waste Management Plan. The center should then adapt the generic plan to their own site specific needs.

STATUS OF CORRECTION:

REVIEWER'SCOMMENTS: Hazardous Waste Management Plan prepared by EA Engineering, Science and Technology July 1995

NAME: [signature] DATE: 21 Nov 95

4-5.1 III ARMY/DOD FINDING RCRA_C
MANUAL QUESTION NUMBER: 04-005 FINDING ID: U4-0405
FINDING CATEGORY: CLASS III
FINDING TYPE: Negative EXISTING NOV: NO
LOCATION: INSTALLATION WIDE
IFS FACILITY NUMBER:
FACILITY TYPE: USARC(MB) - U.S. ARMY RESERVE CENTER - MAIN BLDG

FINDING DESCRIPTION: Annual inventories of hazardous materials do not exist.

CRITERIA: Each facility will conduct an annual inventory of hazardous waste. (AR 200-1, para. 6-4c)

FINDING COMMENTS:

SUGGESTED/ALTERNATIVE CORRECTIVE ACTION(S): Hazardous materials and waste management plan, hazmin efforts, inventories, and inspection logs should be incorporated into one document.

STATUS OF CORRECTION:

REVIEWER'SCOMMENTS: Inventory scheduled 5 Dec 95

NAME: [illegible] DATE: 21 Nov 95

4-6.1 III ARMY/DOD FINDING RCRA_C
MANUAL QUESTION NUMBER: 04-006 FINDING ID: U4-0406
FINDING CATEGORY: CLASS III
FINDING TYPE: Negative EXISTING NOV: NO
LOCATION: INSTALLATION WIDE
IFS FACILITY NUMBER:
FACILITY TYPE: USARC(MB) - U.S. ARMY RESERVE CENTER - MAIN BLDG

FINDING DESCRIPTION: Facility has not initiated a hazmin program.

CRITERIA: Army material resources should be procured and used in a way that minimizes waste production. (AR 200-1, para. 1-27a and 6-6)

FINDING COMMENTS:

SUGGESTED/ALTERNATIVE CORRECTIVE ACTION(S): Initiate a Haz Min program with inspection logs incorporated.

STATUS OF CORRECTION:

REVIEWER'SCOMMENTS: Facility responsibility to initiate a Haz Min Plan after reviewing HWMP.

NAME: [signature] DATE: 21 Nov 95

4-10.1 III ARMY/DOD FINDING RCRA_C
MANUAL QUESTION NUMBER: 04-010 FINDING ID: U4-0410
FINDING CATEGORY: CLASS III
FINDING TYPE: Negative EXISTING NOV: NO
LOCATION: INSTALLATION WIDE
IFS FACILITY NUMBER:
FACILITY TYPE: USARC(MB) - U.S. ARMY RESERVE CENTER - MAIN BLDG

FINDING DESCRIPTION: No apparent evidence of the facility determining if the wastes generated are hazardous wastes.

CRITERIA: Disposal of medical, dental, and veterinary supplies and wastes must meet specific requirements. (AR 200-1, para. 6-11)

FINDING COMMENTS:

SUGGESTED/ALTERNATIVE CORRECTIVE ACTION(S): Hazardous materials management programs are developed at the ARCOM levels. Facility must take a proactive approach and be involved at a facility (site specific) level.

STATUS OF CORRECTION:

REVIEWER'SCOMMENTS: facility responsibility to determine is a hazardous wate is generated or stored.

NAME: [signature] DATE: 21 Nov 95

5-9.1 III ARMY/DOD FINDING RCRA_D
MANUAL QUESTION NUMBER: 05-009 FINDING ID: U4-0509
FINDING CATEGORY: CLASS III
FINDING TYPE: Negative EXISTING NOV: NO
LOCATION: INSTALLATION WIDE
IFS FACILITY NUMBER:
FACILITY TYPE: USARC(MB) - U.S. ARMY RESERVE CENTER - MAIN BLDG

FINDING DESCRIPTION: Facility waste receptacles are not being inspected quarterly.

CRITERIA: Facility industrial shop waste receptacles should be inspected quarterly to verify that hazardous wastes are not being deposited. (GMP)

FINDING COMMENTS:

SUGGESTED/ALTERNATIVE CORRECTIVE ACTION(S): Develop and implement a quarterly inspection program.

STATUS OF CORRECTION:

REVIEWER'SCOMMENTS: facility responsibility to inspect/ and document what is being placed in waste receptacles

NAME: [illegible] DATE: 21 Nov 95

5-10.1 III ARMY/DOD FINDING RCRA_D
MANUAL QUESTION NUMBER: 05-010 FINDING ID: U4-0510
FINDING CATEGORY: CLASS III
FINDING TYPE: Negative EXISTING NOV: NO
LOCATION: INSTALLATION WIDE
IFS FACILITY NUMBER:
FACILITY TYPE: USARC(MB) - U.S. ARMY RESERVE CENTER - MAIN BLDG

FINDING DESCRIPTION: There is no program to keep personnel informed about proper waste disposal practices.

CRITERIA: Facility personnel should be periodically informed about materials that are prohibited from disposal in solid waste receptacles. (GMP)

FINDING COMMENTS:

SUGGESTED/ALTERNATIVE CORRECTIVE ACTION(S): Incorporate a program to keep personnel informed of proper waste handling procedures. Couple this program with other routine programs, publications, and briefings.

STATUS OF CORRECTION:

REVIEWER'SCOMMENTS: Train personnel on what may be placed in trash receptacles.

NAME: [illegible] DATE: 21 Nov 95

6-23.1 II ARMY/DOD FINDING RCRA_I
MANUAL QUESTION NUMBER: 06-023 FINDING ID: U4-0623
FINDING CATEGORY: CLASS I
FINDING TYPE: Positive EXISTING NOV: NO
LOCATION: MAINTENANCE BUILDING SITE
IFS FACILITY NUMBER:
FACILITY TYPE: OMS - ORGANIZATIONAL MAINTENANCE SHOP

FINDING DESCRIPTION: 1000 gallon UST closure REWAI Project #93041 No. 2 fuel oil. The tank was excavated and removed. Soil is in good condition within DRO range 19 to 360 milligrams.

CRITERIA: Facilities with USTs are required to meet specific reporting requirements. (40 CFR 280.34(a))

FINDING COMMENTS: Copy of UST closure report must be kept at the USARC.

SUGGESTED/ALTERNATIVE CORRECTIVE ACTION(S):

STATUS OF CORRECTION:

REVIEWER'SCOMMENTS: UST Removed No further action required.

NAME: [signature] DATE: 21 Nov 95

7-4.1 III ARMY/DOD FINDING CERCLA-SARA
MANUAL QUESTION NUMBER: 07-004 FINDING ID: U4-0704
FINDING CATEGORY: CLASS III
FINDING TYPE: Negative EXISTING NOV: NO
LOCATION: INSTALLATION WIDE
IFS FACILITY NUMBER:
FACILITY TYPE: USARC(MB) - U.S. ARMY RESERVE CENTER - MAIN BLDG

FINDING DESCRIPTION: No past screening for past hazardous substances.

CRITERIA: Screening for past use of hazardous substances and the potential for contamination will be conducted at all major Army facilities and subinstallations, and other properties controlled by the Army. (AR 200-1, para 9-7a)

FINDING COMMENTS: Staff at USAR Center advised that all or part of facility may be built on former landfill.

SUGGESTED/ALTERNATIVE CORRECTIVE ACTION(S): Screen for hazardous substances.

STATUS OF CORRECTION:

REVIEWER'SCOMMENTS: facility responsibility but further investigations should have been conducted prior to building facility.

NAME: [illegible] DATE: 21 Nov 95

10-4.1 III ARMY/DOD FINDING NHPA
MANUAL QUESTION NUMBER: 10-004 FINDING ID: U4-1004
FINDING CATEGORY: CLASS III
FINDING TYPE: Negative EXISTING NOV: NO
LOCATION: INSTALLATION WIDE
IFS FACILITY NUMBER:
FACILITY TYPE: USARC(MB) - U.S. ARMY RESERVE CENTER - MAIN BLDG

FINDING DESCRIPTION: No documentation was found to indicate that a survey has been conducted to locate and inventory possible historic or cultural resources.

CRITERIA: All Federal agencies must establish a program to locate, inventory, and nominate to the Secretary of the Interior all properties under the agency's ownership or control that appear to qualify for inclusion on the National Register of Historic Places. (36 CFR 60.9, and AR 420-40, para. 2-2)

FINDING COMMENTS: The 79th ARCOM has received funding from USARC to do a cultural resource management plan (CRMP). This CRMP is expected to be completed in FY94.

SUGGESTED/ALTERNATIVE CORRECTIVE ACTION(S): Conduct a site survey of historic or cultural resources to locate and preserve.

STATUS OF CORRECTION:

REVIEWER'SCOMMENTS: Cultural Resources Management Plan prepared by USACOE-Baltimore July 1995

NAME: [signature] DATE: 21 Nov 95

11-4.1 III ARMY/DOD FINDING ESA
MANUAL QUESTION NUMBER: 11-004 FINDING ID: U4-1104
FINDING CATEGORY: CLASS III
FINDING TYPE: Negative EXISTING NOV: NO
LOCATION: INSTALLATION WIDE
IFS FACILITY NUMBER:
FACILITY TYPE: USARC(MB) - U.S. ARMY RESERVE CENTER - MAIN BLDG

FINDING DESCRIPTION: No natural resource management plan exists.

CRITERIA: Facilities are required to have a Natural Resources Management Plan that meets specific criteria. (AR 420-74, paras. 8-1a, 8-2a, 8-3b, and 8-4)

FINDING COMMENTS: The 79th ARCOM has received funding from USARC to conduct a natural resource management plan (NRMP). This NRMP is expected to be completed in FY94.

SUGGESTED/ALTERNATIVE CORRECTIVE ACTION(S): Prepare a natural resource management plan.

STATUS OF CORRECTION:

REVIEWER'SCOMMENTS: 79TH ARCOM NRMP prepared by USACOE-Baltimore, August 1995

NAME: [signature] DATE: 21 Nov 95

13-4.1 III ARMY/DOD FINDING ASBESTOS
MANUAL QUESTION NUMBER: 13-004 FINDING ID: U4-1304
FINDING CATEGORY: CLASS III
FINDING TYPE: Negative EXISTING NOV: NO
LOCATION: INSTALLATION WIDE
IFS FACILITY NUMBER:
FACILITY TYPE: USARC(MB) - U.S. ARMY RESERVE CENTER - MAIN BLDG

FINDING DESCRIPTION: No asbestos survey has been conducted by AHERA trained personnel at the center or OMS. Asbestos containing materials (ACM) exist in the facility based on results of previous studies.

CRITERIA: Army Reserve facilities must complete a survey of all structures by 23 May 1991 (AR 200-1, para. 10-2j, para. 10-3b(1-3))

FINDING COMMENTS: Previous removals have reduced the amount of ACM in the facility. Floor tile should be assumed to contain asbestos in the absence of further testing. ACM insulation appears to remain on domestic hot and cold water piping at the wall penetrations. No ACM observed appeared to be in a friable (hazardous) state.

SUGGESTED/ALTERNATIVE CORRECTIVE ACTION(S): Conduct a complete facility survey with qualified asbestos management personnel.

STATUS OF CORRECTION:

REVIEWER'SCOMMENTS: To be started FY 96.

NAME: [illegible] DATE: 21 Nov 95

13-5.1 III ARMY/DOD FINDING ASBESTOS
MANUAL QUESTION NUMBER: 13-005 FINDING ID: U4-1305
FINDING CATEGORY: CLASS III
FINDING TYPE: Negative EXISTING NOV: NO
LOCATION: INSTALLATION WIDE
IFS FACILITY NUMBER:
FACILITY TYPE: USARC(MB) - U.S. ARMY RESERVE CENTER - MAIN BLDG

FINDING DESCRIPTION: There is no asbestos management plan.

CRITERIA: Army Reserve facilities are required to prepare, coordinate, and execute an Installation Asbestos Management Plan. (AR 200-1, para. 10-3)

FINDING COMMENTS:

SUGGESTED/ALTERNATIVE CORRECTIVE ACTION(S): Prepare, as part of the facility asbestos survey, an asbestos management plan.

STATUS OF CORRECTION:

REVIEWER'SCOMMENTS: Facility responsibility to request for an asbestos management plan to be prepared.

NAME: [signature] DATE: 21 Nov 95

14-4.1 III ARMY/DOD FINDING NOISE
MANUAL QUESTION NUMBER: 14-004 FINDING ID: U4-1404
FINDING CATEGORY: CLASS III
FINDING TYPE: Negative EXISTING NOV: NO
LOCATION: INSTALLATION WIDE
IFS FACILITY NUMBER:
FACILITY TYPE: USARC(MB) - U.S. ARMY RESERVE CENTER - MAIN BLDG

FINDING DESCRIPTION: No record of an Installation Compatible Use Zone (ICUZ) program study was available at the facility.

CRITERIA: Facilities are required to conduct an ICUZ study to identify and control noise. (AR 200-1, para 7-2d and para 7-5a)

FINDING COMMENTS: ARCOM is pursuing an ICUZ study under contract with the Baltimore COE District Office.

SUGGESTED/ALTERNATIVE CORRECTIVE ACTION(S): Perform an abbreviated compatible use zone study.

STATUS OF CORRECTION:

REVIEWER'SCOMMENTS: ICUZ study ongoing thru USCHPPM and Baltimore COE.

NAME: Harry Blecke DATE: 21 Nov 95

14-6.1 III ARMY/DOD FINDING NOISE
MANUAL QUESTION NUMBER: 14-006 FINDING ID: U4-1406
FINDING CATEGORY: CLASS III
FINDING TYPE: Negative EXISTING NOV: NO
LOCATION: INSTALLATION WIDE
IFS FACILITY NUMBER:
FACILITY TYPE: USARC(MB) - U.S. ARMY RESERVE CENTER - MAIN BLDG

FINDING DESCRIPTION: The facility faces commercial property. The facility may be located in an area zoned commercial and if classified as municipal use, would be a conforming use. The Plains Township noise ordinance establishes maximum noise levels for daily time periods.

CRITERIA: Facilities should adequately address existing and potential land use conflicts. (GMP)

FINDING COMMENTS:

SUGGESTED/ALTERNATIVE CORRECTIVE ACTION(S): Conduct a noise study to measure levels and identify sensitive receptors. Develop a noise mitigation plan. Coordinate plan with appropriate agencies and solicit community input.

STATUS OF CORRECTION:

REVIEWER'SCOMMENTS: Facility responsibility to request funding for noise study.

NAME: Harry L Blesh DATE: 21 Nov 95

14-11.1 III ARMY/DOD FINDING NOISE
MANUAL QUESTION NUMBER: 14-011 FINDING ID: U4-1411
FINDING CATEGORY: CLASS III
FINDING TYPE: Negative EXISTING NOV: NO
LOCATION: INSTALLATION WIDE
IFS FACILITY NUMBER:
FACILITY TYPE: USARC(MB) - U.S. ARMY RESERVE CENTER - MAIN BLDG

FINDING DESCRIPTION: The facility has not instituted a noise compliant procedure.

CRITERIA: Facilities must institute a noise complaint procedure. (AR 200-1, para 7-3)

FINDING COMMENTS:

SUGGESTED/ALTERNATIVE CORRECTIVE ACTION(S): Establish a SOP for handling noise complaints and institute a noise compliant procedure.

STATUS OF CORRECTION:

REVIEWER'SCOMMENTS: Establish a noise complaint procedure.

NAME: [illegible] DATE: 21 Nov 95

15-4.1 III ARMY/DOD FINDING RADON
MANUAL QUESTION NUMBER: 15-004 FINDING ID: U4-1504
FINDING CATEGORY: CLASS III
FINDING TYPE: Positive EXISTING NOV: NO
LOCATION: INSTALLATION WIDE
IFS FACILITY NUMBER:
FACILITY TYPE: USARC(MB) - U.S. ARMY RESERVE CENTER - MAIN BLDG

FINDING DESCRIPTION: Radon is currently being measured in accordance with AR 200-1.

CRITERIA: All Army Reserve facilities are required to perform radon measurement according to a prescribed prioritized schedule in order to identify Army Reserve structures with radon levels above 4 pCi/l with emphasis on identifying Priority 1 structures with levels greater than 20 pCi. (AR 200-1, para. 11-2a(3), 11-4)

FINDING COMMENTS:

SUGGESTED/ALTERNATIVE CORRECTIVE ACTION(S):

STATUS OF CORRECTION:

REVIEWER'SCOMMENTS: Radon mitigation completed October 1995.

NAME: Harry C Blake DATE: 21 Nov 95

15-5.1 HS ARMY/DOD FINDING RADON
MANUAL QUESTION NUMBER: 15-005 FINDING ID: U4-1505
FINDING CATEGORY: HEALTH/SAFETY
FINDING TYPE: Positive EXISTING NOV: NO
LOCATION: INSTALLATION WIDE
IFS FACILITY NUMBER:
FACILITY TYPE: USARC(MB) - U.S. ARMY RESERVE CENTER - MAIN BLDG

FINDING DESCRIPTION: Long term measurements are currently being done for radon.

CRITERIA: Initial phase measurement of Priority 1 structures is required to be done according to specific standards. (AR 200-1, para. 11-5a)

FINDING COMMENTS:

SUGGESTED/ALTERNATIVE CORRECTIVE ACTION(S):

STATUS OF CORRECTION:

REVIEWER'SCOMMENTS: Completed Radon is being mitigated

NAME: [illegible] DATE: 21 Nov 95

16-2.1 III ARMY/DOD FINDING ENV PROGRAM
MANUAL QUESTION NUMBER: 16-002 FINDING ID: U4-1602
FINDING CATEGORY: CLASS III
FINDING TYPE: Negative EXISTING NOV: NO
LOCATION: INSTALLATION WIDE
IFS FACILITY NUMBER:
FACILITY TYPE: USARC(MB) - U.S. ARMY RESERVE CENTER - MAIN BLDG

FINDING DESCRIPTION: Facility did not have all relevant environmental publications.

CRITERIA: Copies of all relevant Federal, DoD, Army, and state/local regulations should be maintained at the facility. (GMP)

FINDING COMMENTS:

SUGGESTED/ALTERNATIVE CORRECTIVE ACTION(S): Obtain copies of all relevant publications. Lists of Federal, DoD and Army publications can be obtained from the Commanders Guide to Environmental Management and AR 200-1, Appendix A (References)

STATUS OF CORRECTION:

REVIEWER'SCOMMENTS: 79TH ARCOM requires only AR 200-1, AR 200-2, AR 200-3 and Commanders Guide for Environmental Managament.

NAME: [signature] DATE: 21 Nov 95

16-6.1 III ARMY/DOD FINDING ENV PROGRAM
MANUAL QUESTION NUMBER: 16-006 FINDING ID: U4-1606
FINDING CATEGORY: CLASS III
FINDING TYPE: Negative EXISTING NOV: NO
LOCATION: INSTALLATION WIDE
IFS FACILITY NUMBER:
FACILITY TYPE: USARC(MB) - U.S. ARMY RESERVE CENTER - MAIN BLDG

FINDING DESCRIPTION: Installation has not developed an environmental affairs training program for its personnel which are involved in environmental matters.

CRITERIA: Facility personnel involved in environmental affairs should receive the necessary training. (GMP)

FINDING COMMENTS: Personnel that are involved in environmental matters and all personnel should review the TEC tape "Every Little Bit Hurts" to raise awareness in the handling of hazardous material waste.

SUGGESTED/ALTERNATIVE CORRECTIVE ACTION(S): Maintain formal training program and encourage all individuals involved to seek further education, through Army offered environmental schools. Obtain a copy of the Department of the Army Environmental Training Guide.

STATUS OF CORRECTION:

REVIEWER'SCOMMENTS: Facility responsibility to train and inform personnel on environmental matters.

NAME: [illegible] DATE: 21 Nov 95

16-14.1 III ARMY/DOD FINDING ENV PROGRAM
MANUAL QUESTION NUMBER: 16-014 FINDING ID: U4-1614
FINDING CATEGORY: CLASS III
FINDING TYPE: Negative EXISTING NOV: NO
LOCATION: INSTALLATION WIDE
IFS FACILITY NUMBER:
FACILITY TYPE: USARC(MB) - U.S. ARMY RESERVE CENTER - MAIN BLDG

FINDING DESCRIPTION: Documentation that the facility's environmental requirements were entered into the A-106/RCS 1383 report process is not provided to the facility manager by the 79th ARCOM.

CRITERIA: The facility should have copies of all relevant Federal, DoD, and Army regulations on the A-106 Pollution Abatement Plan/RCS 1383 Report. (GMP)

FINDING COMMENTS:

SUGGESTED/ALTERNATIVE CORRECTIVE ACTION(S): Establish minimum environmental requirements (contained storage area, fireproof cabinets, cleanup materials, etc.). Prepare work orders for use in preparing the RCS 1383 reports and incorporate unfunded requirements in the Army Reserve Budget process. Establish a process for keeping the facility manager informed of the status of all proposed tasks which appear on the RCS 1383 report.

STATUS OF CORRECTION:

REVIEWER'SCOMMENTS: Facility does not prepare 1383 reports, 79TH CST does reports.

NAME: [signature] DATE: 21 Nov 95

16-21.1 III ARMY/DOD FINDING ENV PROGRAM
MANUAL QUESTION NUMBER: 16-021 FINDING ID: U4-1621
FINDING CATEGORY: CLASS III
FINDING TYPE: Negative EXISTING NOV: NO
LOCATION: INSTALLATION WIDE
IFS FACILITY NUMBER:
FACILITY TYPE: USARC(MB) - U.S. ARMY RESERVE CENTER - MAIN BLDG

FINDING DESCRIPTION: The Facility Environmental Coordinator has only recently been assigned and is not formally informed of all environmental management responsibilities.

CRITERIA: The Environmental Coordinator should maintain good rapport with the supporting Host installation Environmental Office, and provide environmental support to Weekend Training sites (WETs). (GMP)

FINDING COMMENTS:

SUGGESTED/ALTERNATIVE CORRECTIVE ACTION(S): The designated Facility Environmental Coordinator should have environmental management responsibilities included in their job description and be actively involved with all environmental affairs.

STATUS OF CORRECTION:

REVIEWER'SCOMMENTS: facility responsibility to inform/ train environmental coordinator

NAME: [signature] DATE: 22 Nov 95

17-4.1 III ARMY/DOD FINDING HAZMAT
MANUAL QUESTION NUMBER: 17-004 FINDING ID: U4-1704
FINDING CATEGORY: CLASS III
FINDING TYPE: Negative EXISTING NOV: NO
LOCATION: INSTALLATION WIDE
IFS FACILITY NUMBER:
FACILITY TYPE: USARC(MB) - U.S. ARMY RESERVE CENTER - MAIN BLDG

FINDING DESCRIPTION: Master listing of hazardous waste not incorporated into spill prevention containment control plan (SPCCP).

CRITERIA: A master listing of all hazardous substances at handling, storage, and transfer facilities is required as a part of the SPCC plan. (AR 200-1, para. 8-4b(4))

FINDING COMMENTS:

SUGGESTED/ALTERNATIVE CORRECTIVE ACTION(S): Develop and incorporate through ARCOM Environmental Office asking site specifics.

STATUS OF CORRECTION:

REVIEWER'SCOMMENTS: Exemption letter for Installation Spill Prevention, Control and Countermeasures Plan (ISPCCP) prepared by EA Engineering, Science and Technology

NAME: [illegible] DATE: 22 Nov 95

17-7.1 III ARMY/DOD FINDING HAZMAT
MANUAL QUESTION NUMBER: 17-007 FINDING ID: U4-1707
FINDING CATEGORY: CLASS III
FINDING TYPE: Negative EXISTING NOV: NO
LOCATION: INSTALLATION WIDE
IFS FACILITY NUMBER:
FACILITY TYPE: USARC(MB) - U.S. ARMY RESERVE CENTER - MAIN BLDG

FINDING DESCRIPTION: Facility has not initiated hazardous material minimization program.

CRITERIA: Hazardous material management is to be considered an integral part of the Army Hazardous Waste Minimization Program. (AR 200-1, 6-6b)

FINDING COMMENTS:

SUGGESTED/ALTERNATIVE CORRECTIVE ACTION(S): Develop hazardous material plan and incorporate hazardous materials minimization.

STATUS OF CORRECTION:

REVIEWER'SCOMMENTS: Hazardous Waste Management Plan(HWMP) prepared by EA Engineering, Science and Technology, July 1995

NAME: [illegible] DATE: 22 Nov 95

17-8.1 III ARMY/DOD FINDING HAZMAT
MANUAL QUESTION NUMBER: 17-008 FINDING ID: U4-1708
FINDING CATEGORY: CLASS III
FINDING TYPE: Negative EXISTING NOV: NO
LOCATION: INSTALLATION WIDE
IFS FACILITY NUMBER:
FACILITY TYPE: USARC(MB) - U.S. ARMY RESERVE CENTER - MAIN BLDG

FINDING DESCRIPTION: Unit has not coordinated with local fire department to correlate location and contents of hazardous materials.

CRITERIA: The facility should coordinate with the fire department concerning the types of hazardous chemicals used at the facility, the areas where they are used, what they are used for, and the quantities used in a given operation. (GMP)

FINDING COMMENTS:

SUGGESTED/ALTERNATIVE CORRECTIVE ACTION(S): Coordinate with local fire department.

STATUS OF CORRECTION:

REVIEWER'SCOMMENTS: Facility responsibility After inventory of facility and chemical inventory and MSDS's received coordination with local fire department can be accomplished.

NAME: [signature] DATE: 22 Nov 95

17-16.1 III ARMY/DOD FINDING HAZMAT
MANUAL QUESTION NUMBER: 17-016 FINDING ID: U4-1716
FINDING CATEGORY: CLASS III
FINDING TYPE: Negative EXISTING NOV: NO
LOCATION: INSTALLATION WIDE
IFS FACILITY NUMBER:
FACILITY TYPE: USARC(MB) - U.S. ARMY RESERVE CENTER - MAIN BLDG

FINDING DESCRIPTION: Paint spray cans, spray lubricants and other flammables stored outside flammable storage cabinets.

CRITERIA: Storage cabinets used for the storage of flammable/combustible liquids should be used properly. (GMP)

FINDING COMMENTS:

SUGGESTED/ALTERNATIVE CORRECTIVE ACTION(S): Procure additional cabinets as necessary.

STATUS OF CORRECTION:

REVIEWER'SCOMMENTS: Inventory scheduled for 5 Dec 95 and excess, outdated and hazardous materials will be turned in.

NAME: [signature] DATE: 22 Nov 95

DEPARTMENT OF THE ARMY
HEADQUARTERS 416TH ENGINEER COMMAND
FACILITIES ENGINEERING TDA (AUGMENTATION)
10 S 100 SOUTH FRONTAGE ROAD
DARIEN, IL 60561-1780

TOTAL FACILITY ASSESSMENT REPORT

Wilkes-Barre USAR Center
Facility EMAAR Number: PA099
99th Regional Support Command

Conducted 22-23 April 1997
by the
Fort Indiantown Gap Facilities Engineering Team
of the
416th Engineer Command
Engineer Support Group-East

416th ENGINEER COMMAND
USAR FACILITY
TOTAL FACILITY ASSESSMENT

INSTALLATION NAME: WILKES-BARRE USAR CENTER
INSTALLATION EMMAR NUMBER: PA099 DATE: 21 June 1997

TABLE OF CONTENTS

SECTION	DESCRIPTION
1	EXECUTIVE SUMMARY
2	ASSESSMENT IDENTIFICATION
3	FACILITY DATA (EMAAR DATA SHEETS)
4	GRAPHICAL DATA
A	VICINITY MAP
B	LOCATION MAP
C	SITE MAP
D	BUILDING FLOOR PLANS
5	EXISTING CONDITIONS PHOTOGRAPHS
A	EXTERIOR PHOTOGRAPHIC
B	INTERIOR PHOTOGRAPHICS
	ENCLOSURES
1	RPMA PROJECT DOCUMENTATION
2	ENERGY AUDIT
3	SAFETY CHECKLIST ASSESSMENT
4	ENVIRONMENTAL COMPLIANCE ASSESS.
5	ARMS STORAGE STRUCTURAL CERT.

SECTION 1- EXECUTIVE SUMMARY
INSTALLATION NAME: Wilkes-Barre USAR Center
INSTALLATION NUMBER: PA 099

The Wilkes-Barre USARC was assessed on 22 and 23 April 1997 by the Fort Indiantown Gap FE Team 2. The facility is located in a commercial area in northeast Pennsylvania adjacent to Interstate 81 and on PA State highway 315 in Wilkes-Barre. The USARC is occupied by the HSD, 365th Engineer Detachment (128 soldiers assigned) and the 828th QM Platoon (69 soldiers assigned). The USARC consists of a two story concrete-block constructed building with a separate similarly constructed OMS. Besides the two buildings, there is a privately owned vehicle (POV) parking area and fenced military equipment parking (MEP) area.

The facility was constructed in 1952 and is generally in good repair but needs effort expended on basic house cleaning. The center and the OMS need exterior painting and new exterior security lighting. There are also repairs needed on exterior steps, sidewalks and a retaining wall in the MEP parking area. There are also repairs needed on the center's gutters and downspouts, as well as the soffut at the OMS. The unit's exterior signs also need replacement as they are outdated and in bad shape.

The facility recently (1991) received some energy efficient upgrades (new energy-efficient windows, gas-fired boilers and a new gas water heater). An Energy Audit was conducted and energy conservation opportunities are possible: Replace the OMS roll-up doors and its associated weather stripping, replace existing lighting with energy efficient lighting, and repair the ceiling insulation in the OMS.

The Safety Assessment documented no RAC 1 nor RAC 2 findings. There were seven RAC 3 findings ranging from the lack of GFIC outlets, missing cover plates on electrical switches and outlets, and the identification of several burned out exit lights . The remaining four RAC 4 findings are primarily lower levels of the frequency and severity of the previously mentioned issues.

The Arms Vault has been certified for compliance with criteria set forth in AR 190-11.

A table has been made with EMAAR data showing updated room usage and square footage. The Environmental Assessment was completed with minimum findings.

LOUIS D. BERMAN
LTC, EN, USAR
Team Leader

SECTION 2-USAR FACILITY ASSESSMENT IDENTIFICATION

INSTALLATION NAME: Wilkes-Barre USAR Center

STREET ADDRESS: 1001 Highway 315 South

CITY: Wilkes-Barre STATE: PA ZIP CODE: 18701-6926

FACILITY IDENTIFICATION NUMBER: PA099

RSC/RSG: 99th RSC, Oakdale, PA

TYPE FACILITY:

A.	USARC:	X	B.	AFRC:	___	C.	OMS:	X	D.	AMSA:	___
E.	DS/GS:	___	F.	MED:	___	G.	WET:	___	H.	FLIGHT	___
I.	ECS:	___	J.	CTF:	___	K.	OTHER:	___			

ASSESSMENT PERFORMED BY: Fort Indiantown Gap Facilities Engineering Team 2

FACILITY ENGINEERING TEAM INCLUDED:

LTC Louis D. Berman
MAJ (P) Todd Griffith
CPT Joel Hager
1LT Robert Schwartz
SFC James Newcomer

REFER TO FOR INFORMATION:

LTC Louis D. Berman
17003 Catalpa Court
Rockville, MD 20855

PERSONNEL CONTACTED ON SITE:

NAME/GRADE	DUTY POSITION	PHONE NUMBER
Mr. Bill Henry	Facility Coordinator	(717) 824-3588
Mr. Johnny Stevens	FMS, CST#2	

ASSESSMENT CONDUCTED FROM: 24 APR 97 0800 TO 25 APR 97 1630
LAST ASSESSMENT CONDUCTED: 20 JAN 1989

Training Building

FACILITY DATA - PA

Room No.	Room Name	Room Dimensions Length (ft)	Width (ft)	Height (ft)	Room Area (sf)	Room Volume (cf)	Use Code
101	OFFICE	17.00	19.25	8.67	327	2837	IA1
102	OFFICE	13.00	19.25	8.67	250	2170	IA1
103	STORAGE	8.00	19.25	8.67	154	1335	IF1
104	ARMS VAULT	38.67	19.00	8.67	735	6370	ID1
105	UTILITY ROOM	11.50	15.50	8.67	178	1545	IH7
106	NBC ROOM	8.50	15.50	8.67	132	1142	IA5a
107	MESS	15.67	12.00	8.67	188	1630	IC
108	ASSEMBLY HALL	70.83	51.00	19.00	3612	68634	IB1
109	KITCHEN	15.67	12.00	8.67	188	1630	IC
110	WOMEN LATRINE	15.50	15.67	.8.67	243	243	IH2
111	MECHANICAL ROOM	36.00	19.00	8.67	684	5930	IH7
112	OFFICER LATRINE	13.00	19.00	8.67	247	2141	IH1
113	LOCKER ROOM	20.50	19.00	8.67	390	3377	IH4
114	UNIT SUPPLY	25.50	19.00	8.67	485	4201	IF3
115	UNIT SUPPLY	19.50	19.00	8.67	371	3212	IF3
116	UNIT SUPPLY SECTION	34.50	19.00	8.67	656	5683	IF3
117	MESS SECTION	16.50	19.00	8.67	314	2718	IF1
118	COMMO SECTION	24.00	19.00	8.67	456	3954	IF1
119	LATRINE	18.25	19.00	8.67	347	3006	IH1
120	DAYROOM	31.00	19.00	8.67	589	5107	IA3
	LOBBY	35.83	19.67	19.00	705	13391	IA6
	HALLWAY 1ST FLOOR	22.50	8.00	9.33	180	1679	IA5a
	MIDDLE STAIRS	15.00	8.25	19.00	124	2351	IA5a
	END STAIRS	15.25	8.00	19.00	122	2318	IA5a
	VESTUBULE	4.50	10.50	9.00	47	425	IA6
	COAL STORAGE	34.50	20.00	9.00	690	6210	IF
201	CLASSROM	28.00	19.50	8.67	546	4734	IE1
202	LIBRARY	10.00	19.50	8.67	195	1691	IE3
203	UNIT OFFICE	12.00	19.50	8.67	234	2029	IA1
204	PERSONNEL ADMIN	12.00	19.50	8.67	234	2029	IA1
205	TRAINING SECTION	13.83	19.50	8.67	270	2338	IA1
206	STORAGE	11.00	15.67	8.67	172	1494	IF1
207	UNIT OFFICE	25.00	19.50	8.67	488	4227	IA1
208	CLASSROOM	31.50	19.50	8.67	614	5326	IE1
209	CLASSROOM	28.50	19.50	8.67	556	4818	IE1
210	CLASSROOM	30.50	19.50	8.67	595	5156	IE1
211	STORAGE	8.00	5.00	8.67	40	347	IF4
211	STORAGE	6.00	19.50	8.67	117	1014	IF1
211	STORAGE	8.00	14.50	8.67	116	1006	IF1

Training Building

FACILITY DATA - PA

Room No.	Room Name	Room Dimensions			Room Area	Room Volume	Use Code
		Length (ft)	Width (ft)	Height (ft)	(sf)	(cf)	
212	STORAGE	110.00	19.25	8.67	2118	18359	IF1
	HALLWAY 2ND FLOOR	200.00	6.50	9.33	1300	12129	IA5a
					20005	219938	

OMS

FACILITY DATA - PA

Room No.	Room Name	Room Dimensions			Room Area	Room Volume	Use Code
		Length (ft)	Width (ft)	Height (ft)	(sf)	(cf)	
	MAINT BLDG	52.50	68.75	12.00	3609	43313	IIA8
					3609	43313	

SECTION 4
GRAPHICAL DATA

SECTION 4A
VICINITY MAP

WILKES-BARRE USARC

1001 Highway 315 South
Wilkes-Barre PA 18701-6926

FACID: PA099 Phone: (717) 824-3588

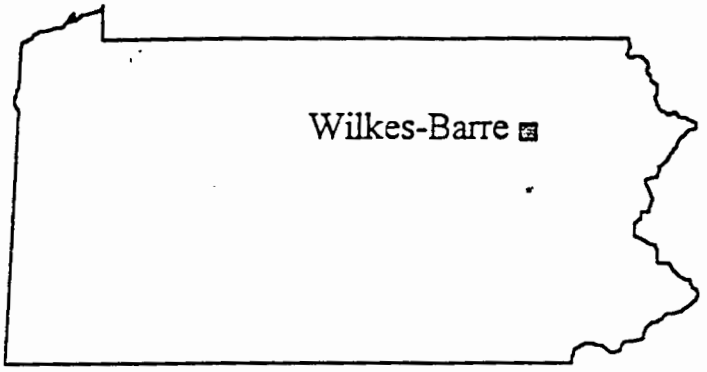

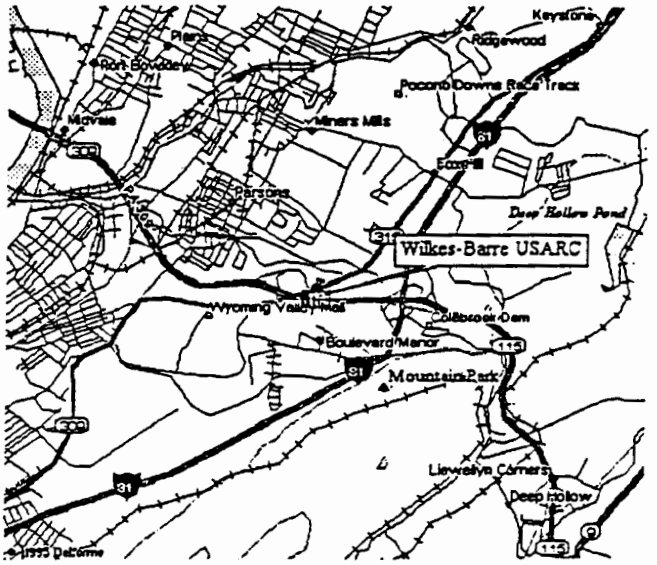

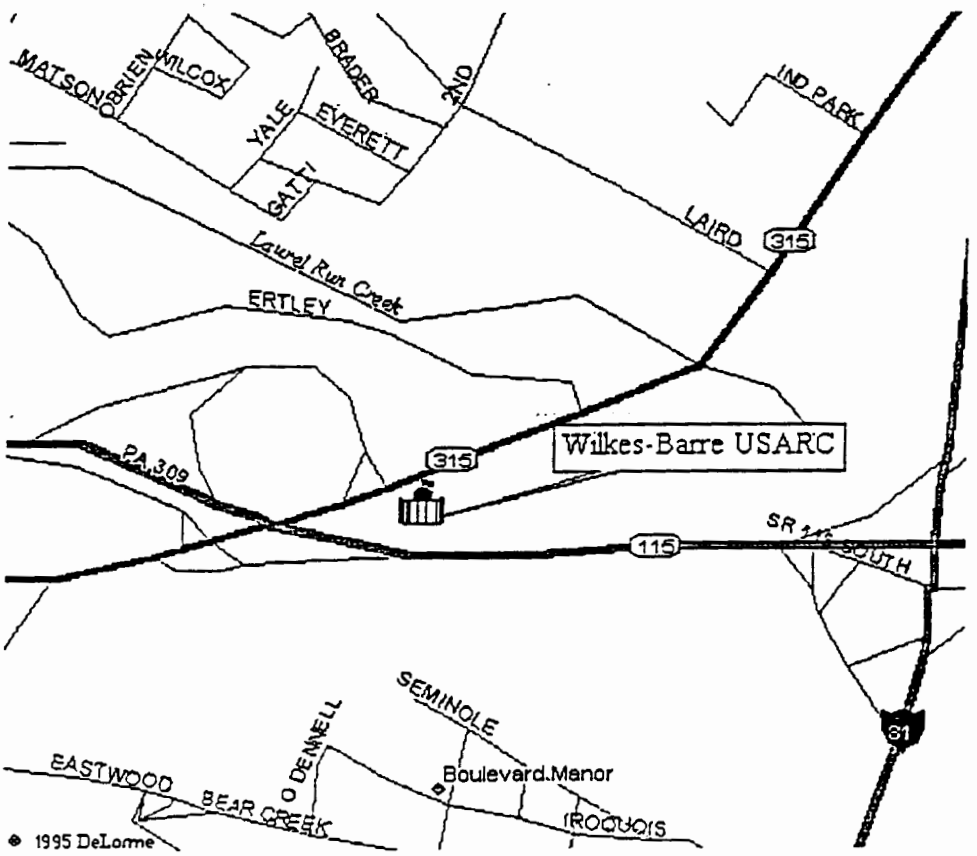

SECTION 4C
SITE MAP

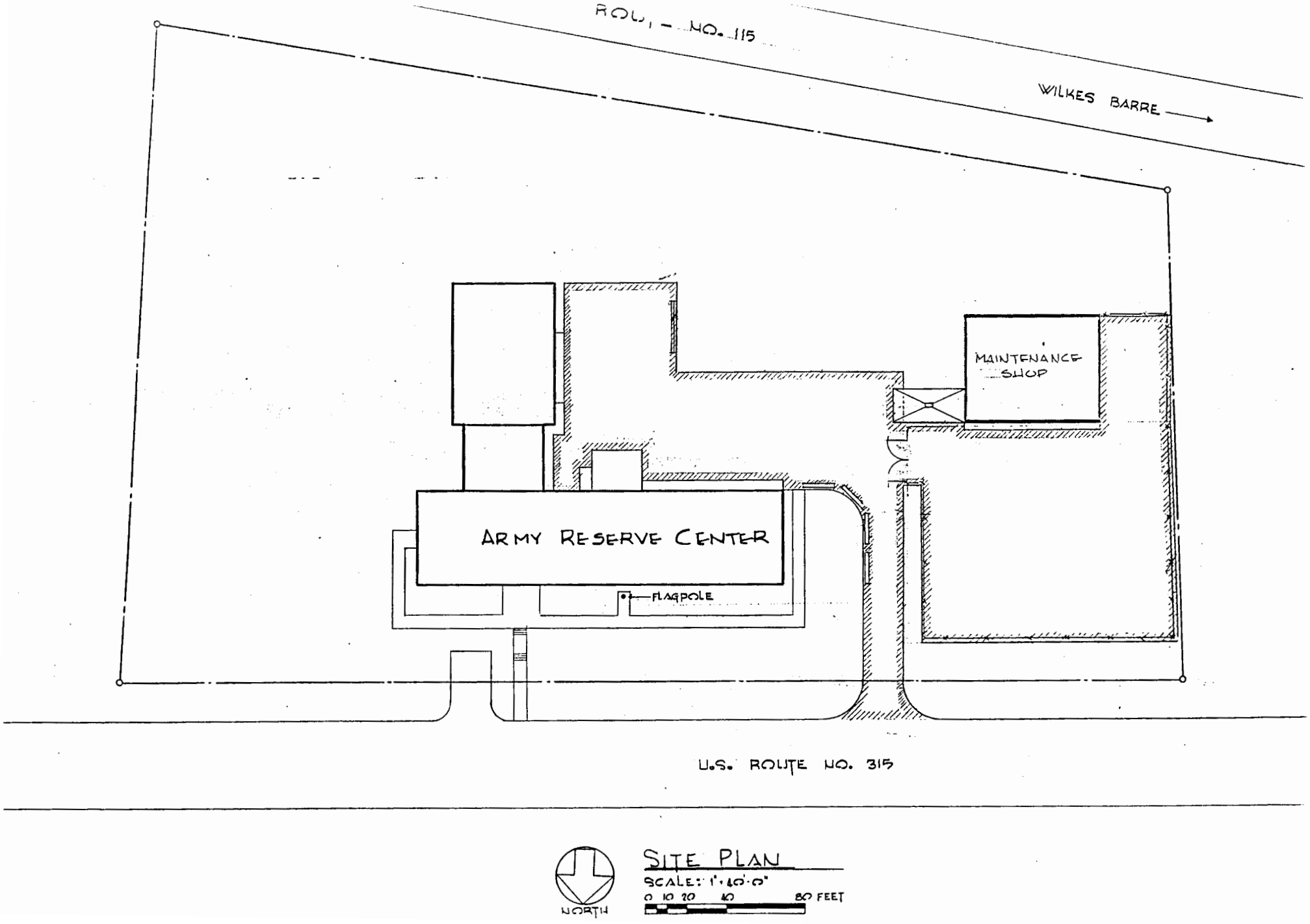
ROU. - NO. 115
WILKES BARRE
MAINTENANCE SHOP
ARMY RESERVE CENTER
FLAGPOLE
U.S. ROUTE NO. 315
NORTH
SITE PLAN
SCALE: 1" = 40'-0"
0 10 20 40 80 FEET

SECTION 4D
FLOOR PLANS

WILKES-BARRE USAR CENTER
FIRST FLOOR PLAN

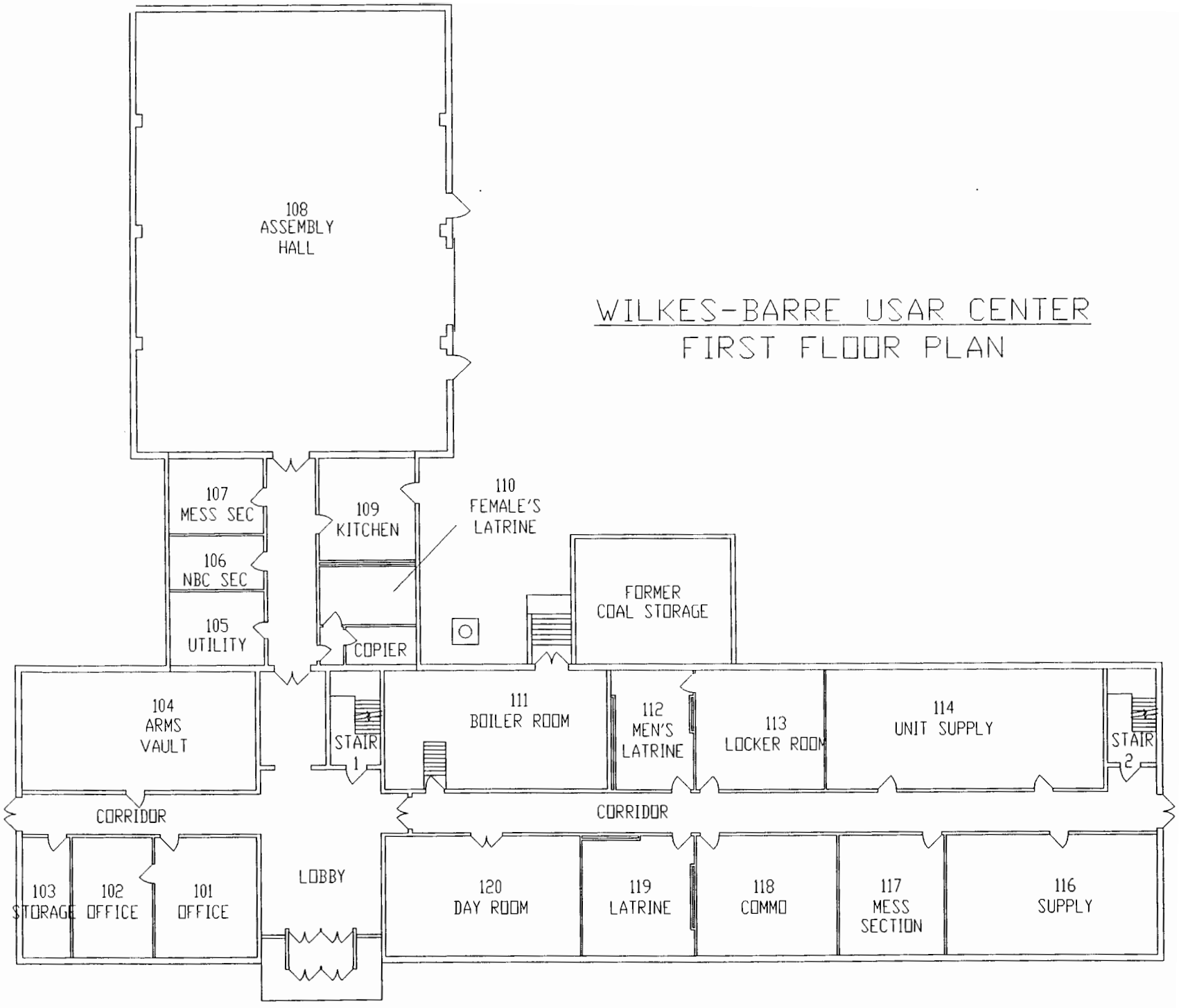

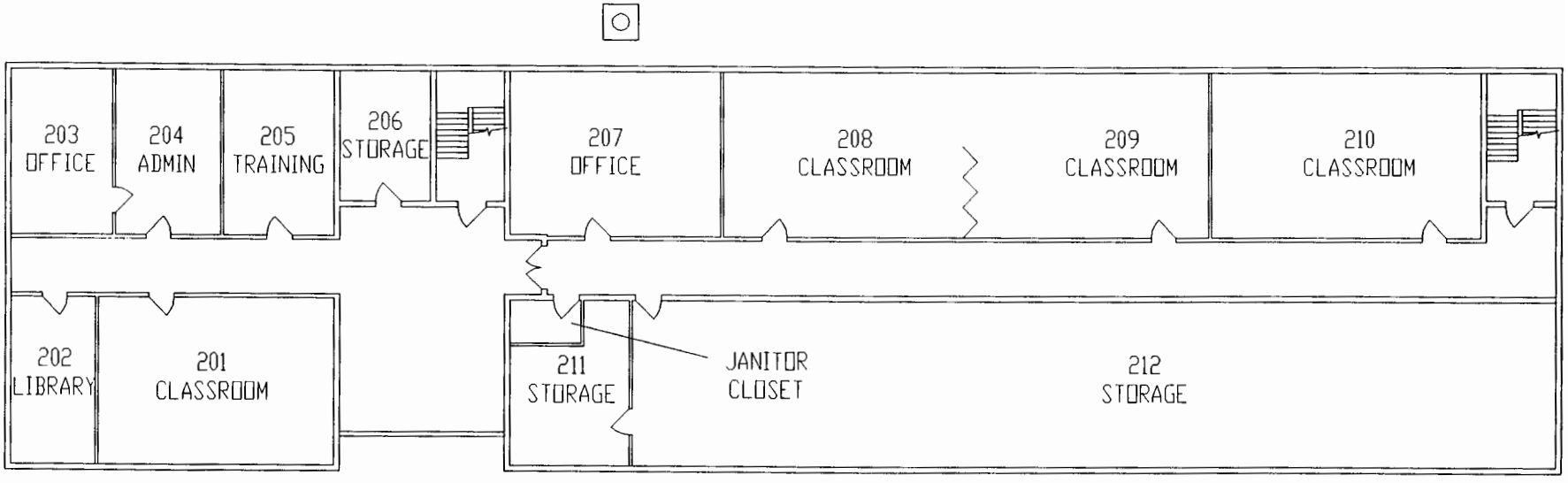

WILKES-BARRE USAR CENTER

SECOND FLOOR PLAN

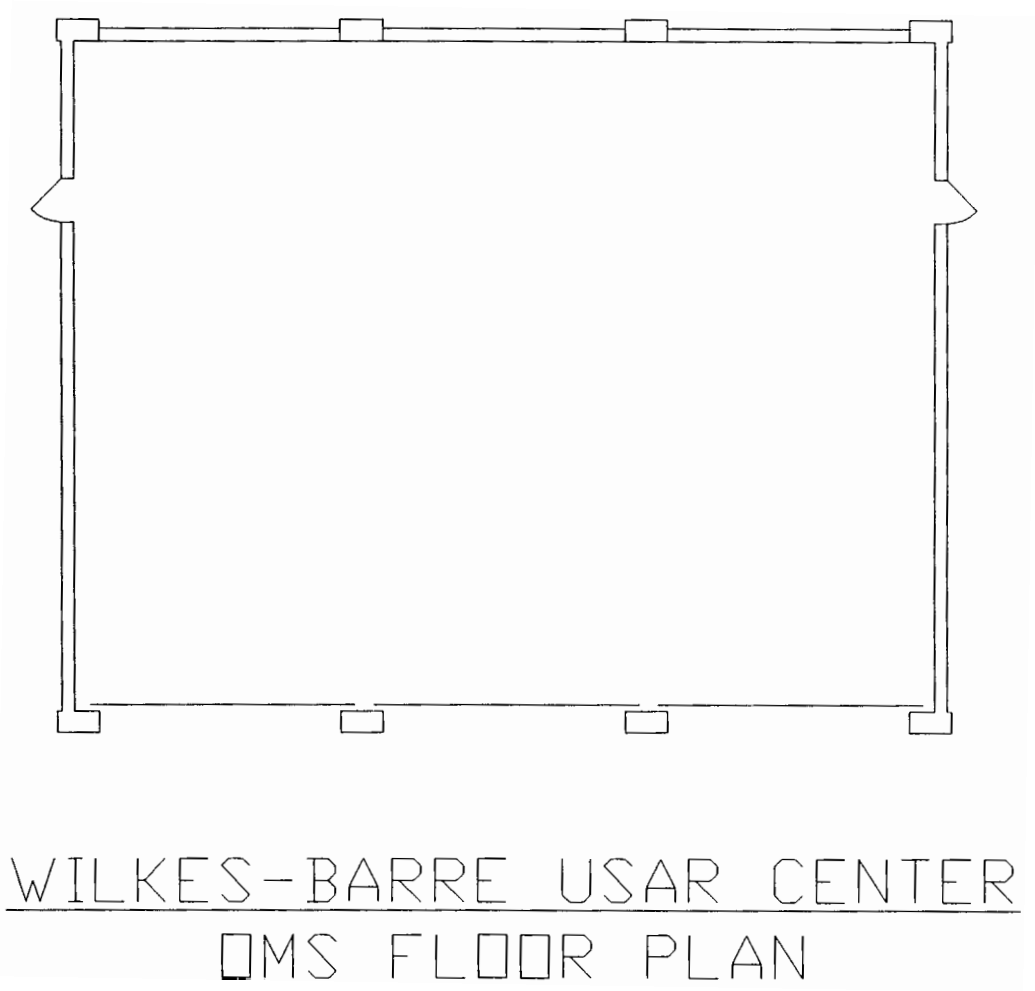

WILKES-BARRE USAR CENTER

OMS FLOOR PLAN

SECTION 5
EXISTING CONDITIONS PHOTOGRAPHS

SECTION 5A
EXTERIOR PHOTOGRAPHS

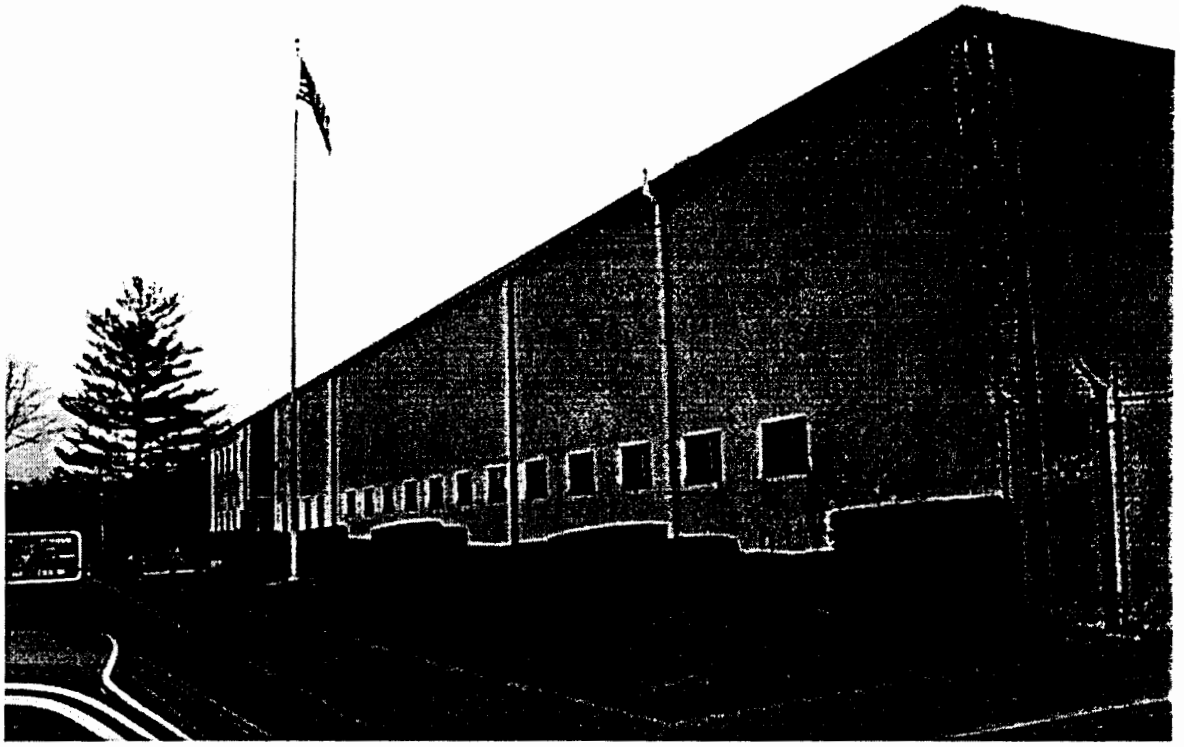

Photo 5A-01

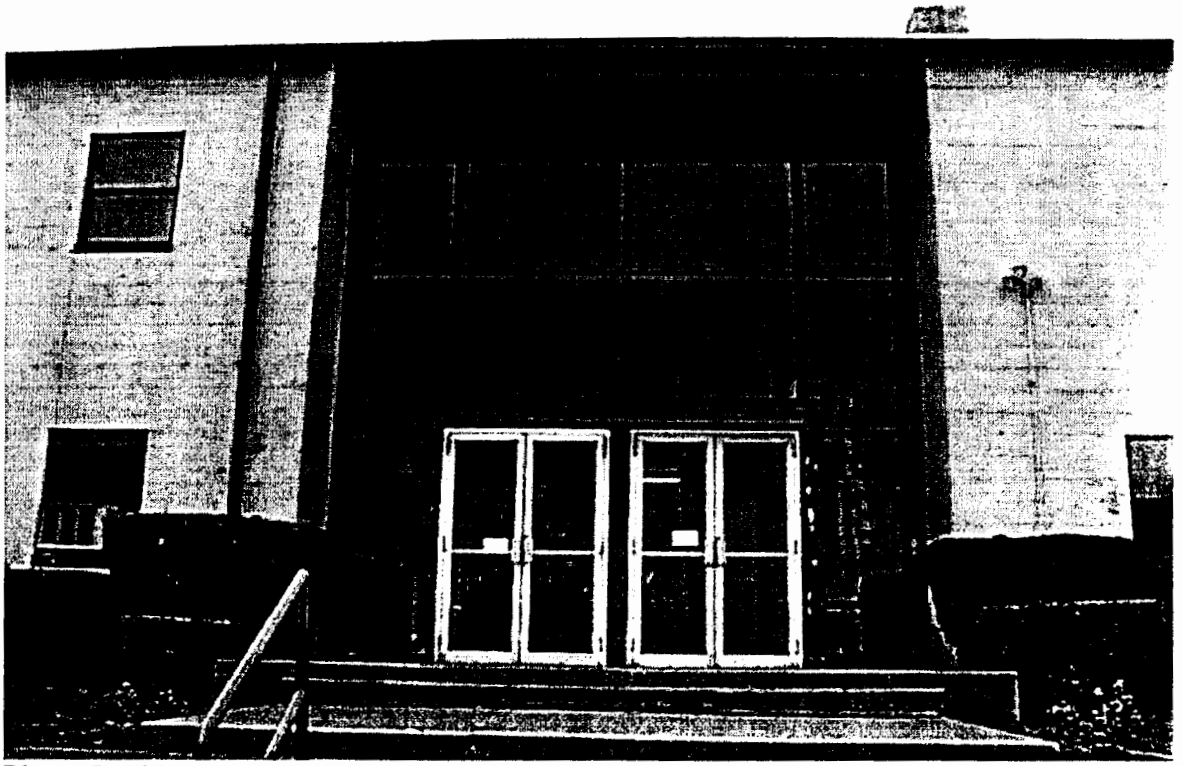

Photo 5A-02

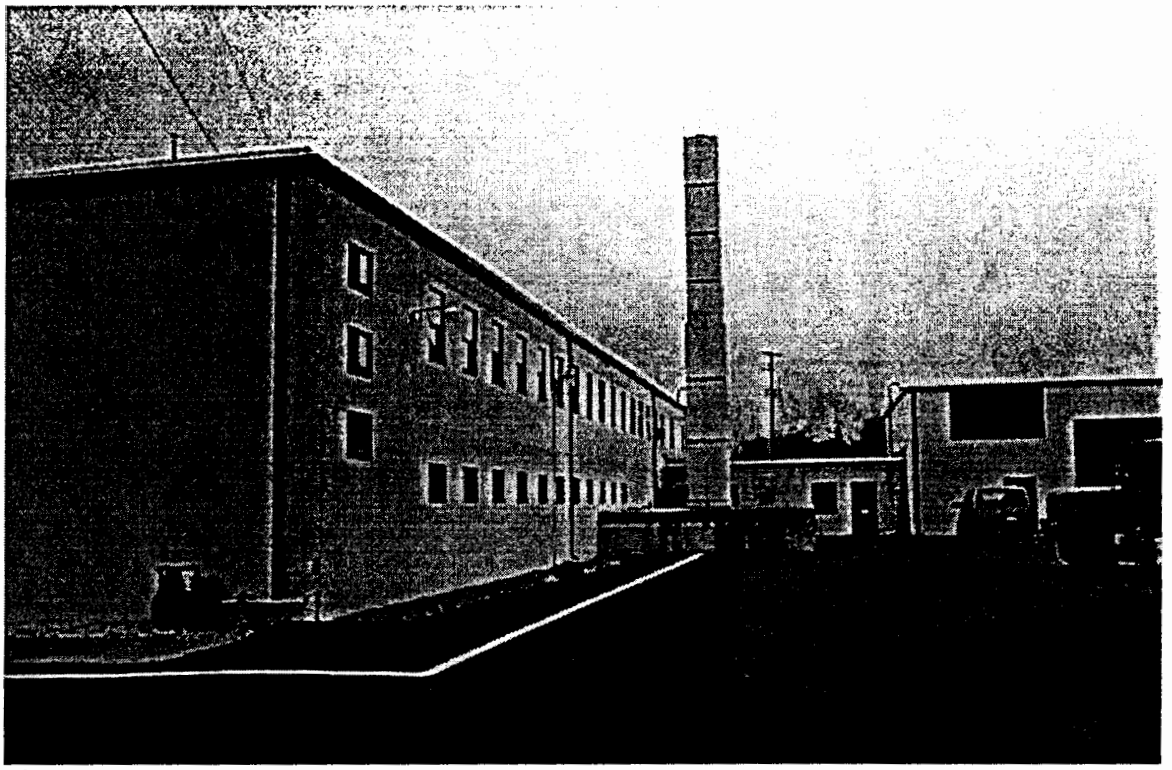

Photo 5A-03

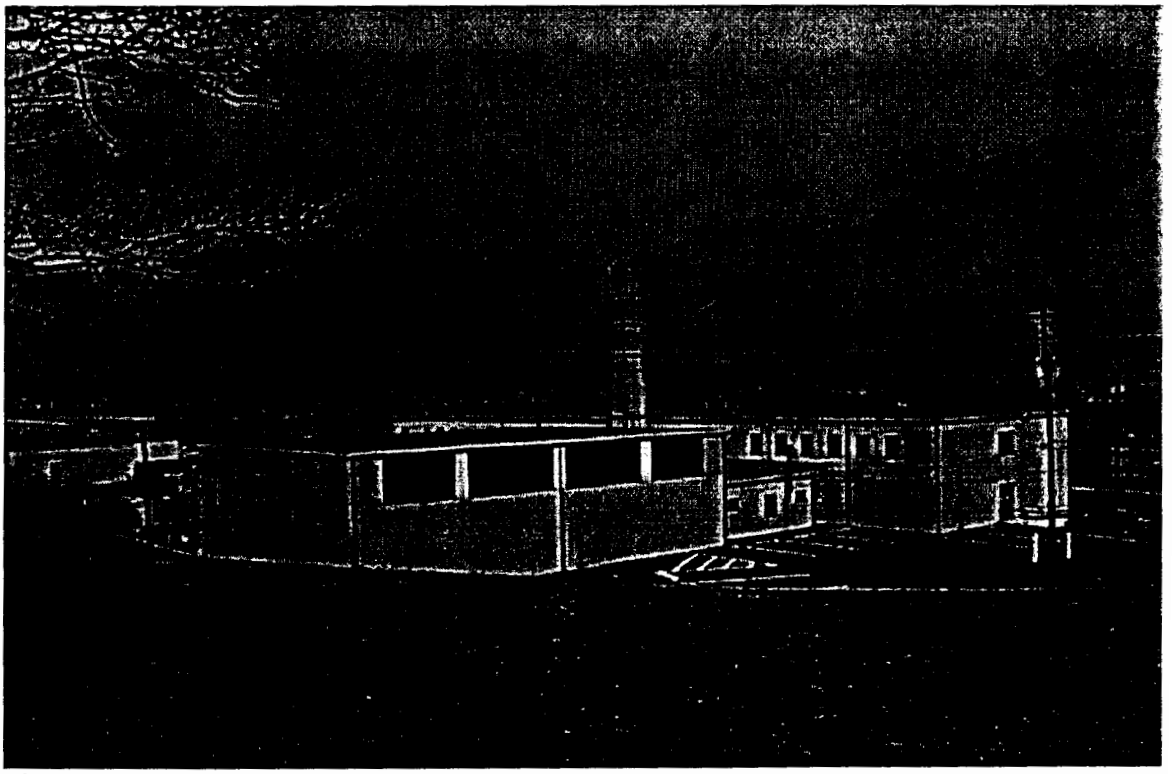

Photo 5A-04

SECTION 5B
INTERIOR PHOTOGRAPHS

NEW RPMA PROJECTS

ENCLOSURE 1
RPMA PROJECT DOCUMENTATION

ENCLOSURE 1 - SUMMARY OF NEWLY IDENTIFIED UNCONSTRAINED WORK REQUIREMENTS

INSTALLATION NAME: **Wilkes-Barre US Army Reserve Center**

INSTALLATION NUMBER: **PA099**

	ESTIMATED COST ($000)
A. NEWLY IDENTIFIED MAINTENANCE AND REPAIR	
IMPACT CARD	2.110
CONTRACT	91.208
B. NEWLY IDENTIFIED MINOR CONSTRUCTION/ALTERATION	5.825
C. NEWLY IDENTIFIED OTHER ENGINEERING SERVICES	0
TOTAL NEWLY IDENTIFIED UNCONSTRAINED WORK REQUIREMENTS	**99.143**

NEWLY IDENTIFIED UNCONSTRAINED WORK REQUIREMENTS

WORK ORDER NUMBER	BUILDING NUMBER	WORK DESCRIPTION	ESTIMATED COST ($000)	
NEWLY IDENTIFIED RPMA PROJECTS - IMPACT CARD:				
IC-1	MAIN	stair treads worn and broken (33lf)	.400	
IC-2	MAIN	repair plaster wall (50sf)	.230	
IC-3	MAIN	repair gutter and downspouts (4ea)	.320	
IC-4	POV	reinstall parking stops on new pavement (30ea)	.460	
IC-5	MAIN	repair 5" gap between front steps and sidewalk (6lf)	.180	
IC-6	MAIN	soffit around drill hall needs painted (100sf)	.200	
IC-7	MAIN	repair leaking toilet	.120	
IC-8	MAIN	block entrance to coal storage	.200	
Total Newly Identified RPMA Projects - Impact Card				**2.110**
NEWLY IDENTIFIED RPMA PROJECTS - CONTRACT - None				
PA099-1	MAIN	electrical service upgrade	8.717	
PA099-2	MAIN	replacement foyer	47.527	
PA099-3	MAIN	install range hood and fire suppression	7.728	
PA099-4	OMS	replace fascia	1.232	
PA099-5	OMS	replace three overhead doors	26.004	
Total Newly Indentified RPMA Projects - Contract				**91.208**
NEWLY IDENTIFIED MINOR CONSTRUCTION/ALTERATION - None				
PA099-6	MEP	drainage upgrade, eliminate retaining wall	5.825	
Total Newly Identified Minor Construction/Alteration				**5.825**
NEWLY IDENTIFIED OTHER ENGINEERING SERVICES - None				
Total Newly Indentified Other Engineering Services				**0.00**
TOTAL NEWLY IDENTIFIED WORK PROJECTS:				**99.143**

NEW RPMA PROJECTS

IMPACT CARD

Project Documentation

RPMA PROJECT

INSTALLATION: Wilkes-Barre US Army Reserve Center

PROJECT NUMBER: IC-1

PROJECT NAME: stair treads worn and broken

PROJECT DESCRIPTION:

Replace 11 worn and broken stair treads.

DESCRIPTION OF CURRENT CONDITIONS AND JUSTIFICATION:

Stair treads are worn and broken resulting in a safety hazard and possible damage to the stairs.

SKETCHES: None

PHOTOS: None

FIELD NOTES: 33 LF

COST ESTIMATE: $400

RPMA PROJECT

INSTALLATION: Wilkes-Barre US Army Reserve Center

PROJECT NUMBER: IC-2

PROJECT NAME: Repair plaster wall

PROJECT DESCRIPTION:

Repair water damage to plaster wall in storage room beside female latrine.

DESCRIPTION OF CURRENT CONDITIONS AND JUSTIFICATION:

Prior water damage has caused plaster to crack, peel, and flake in the corner of the storage room.

SKETCHES: None

PHOTOS: None

FIELD NOTES: 50 SF

COST ESTIMATE: $230

RPMA PROJECT

INSTALLATION: Wilkes-Barre US Army Reserve Center

PROJECT NUMBER: IC-3

PROJECT NAME: gutter leaks at joints, downspouts broken

PROJECT DESCRIPTION:

Repair leaking gutter joints at five locations and replace two broken downspouts.

DESCRIPTION OF CURRENT CONDITIONS AND JUSTIFICATION:

Leaking gutter joints have caused a discoloration of the exterior building walls. Two downspouts are not connected to the gutter.

SKETCHES: None

PHOTOS: See Appendix 1

FIELD NOTES: None

COST ESTIMATE: $320

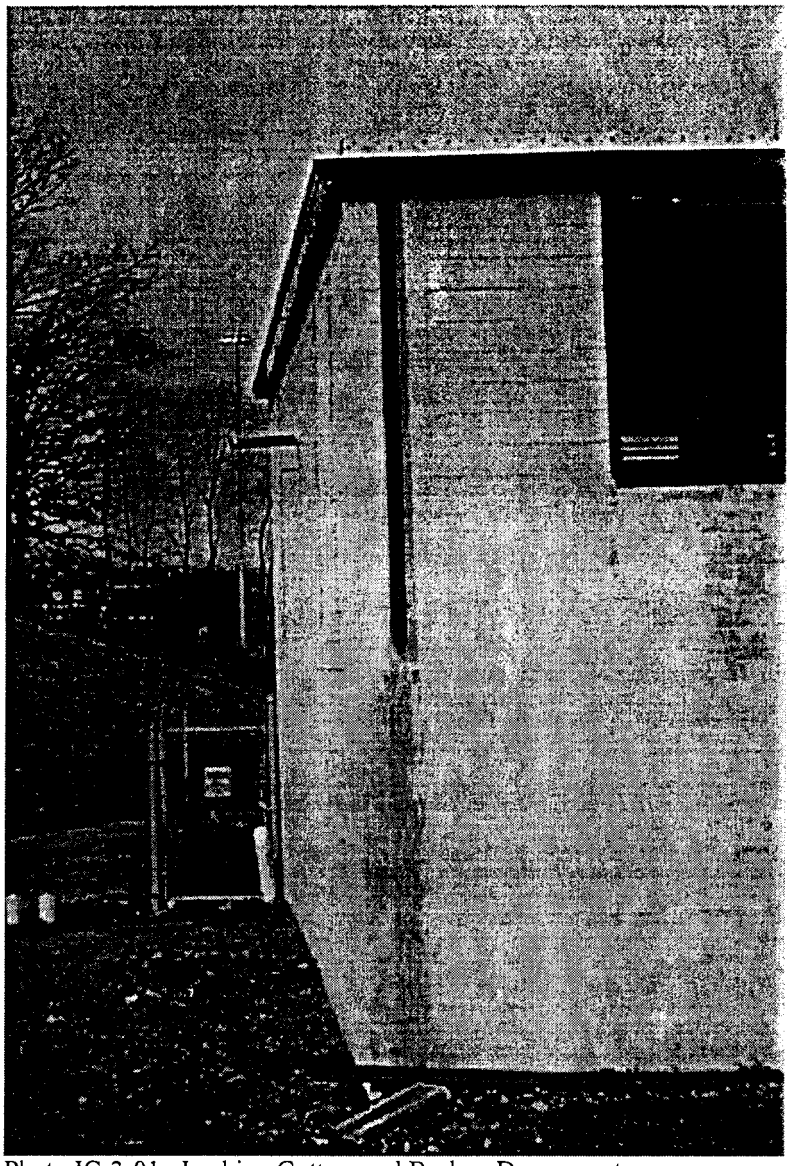

Photo IC-3-01: Leaking Gutters and Broken Downspouts

Photo IC-3-02: Leaking Gutters and Broken Downspouts

RPMA PROJECT

INSTALLATION: Wilkes-Barre US Army Reserve Center

PROJECT NUMBER: IC-4

PROJECT NAME: Install curb stops on new pavement

PROJECT DESCRIPTION:

Installation of 30 curb stops on newly resurfaced MEP.

DESCRIPTION OF CURRENT CONDITIONS AND JUSTIFICATION:

Resurface of MEP did not include installation of 30 curb stops. Lack of curb stops may allow damage to the edge of the pavement or fence due to vehicle traffic.

SKETCHES: None

PHOTOS: None

FIELD NOTES: None

COST ESTIMATE: $460

RPMA PROJECT

INSTALLATION: Wilkes-Barre US Army Reserve Center

PROJECT NUMBER: IC-5

PROJECT NAME: repair 5" gap between front steps and sidewalk

PROJECT DESCRIPTION:

Repair 5" gap between front steps and sidewalk.

DESCRIPTION OF CURRENT CONDITIONS AND JUSTIFICATION:

The front steps and sidewalk have separated by 5 inches due to minor slumping in the fill. This creates a tripping hazard.

SKETCHES: None

PHOTOS: See Appendix 1

FIELD NOTES: 6 LF

COST ESTIMATE: $180

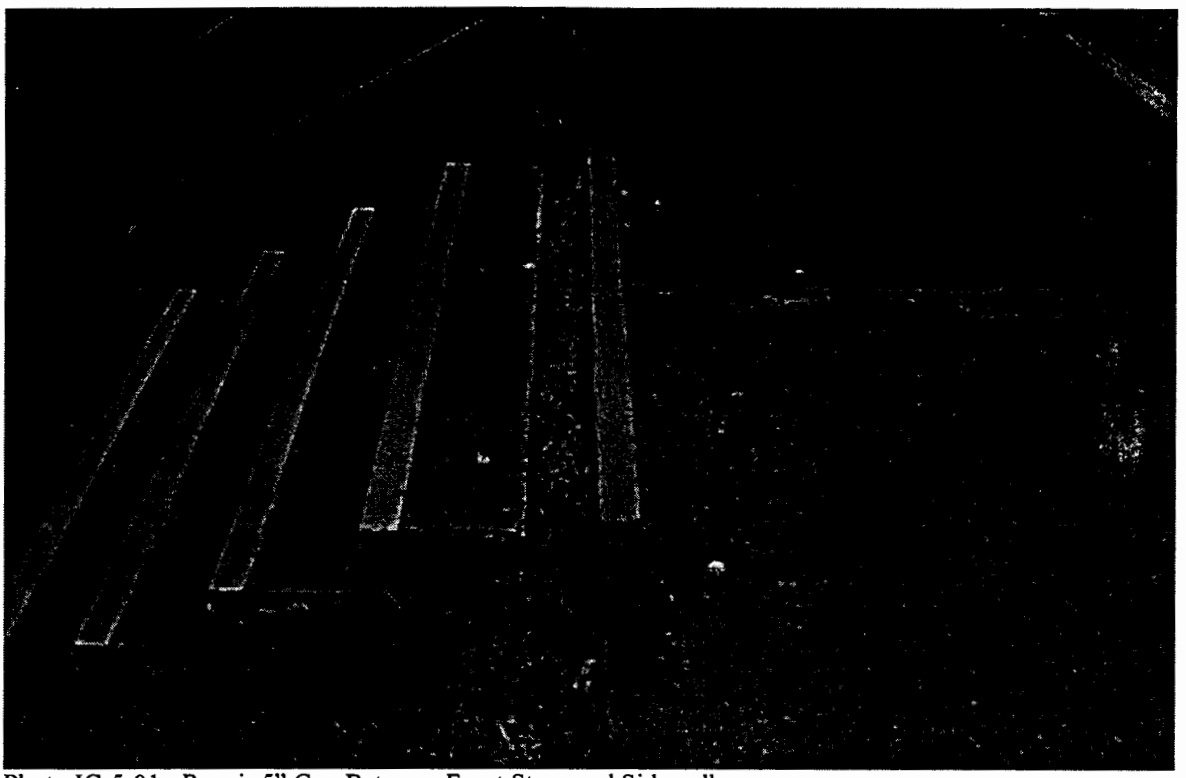

Photo IC-5-01: Repair 5" Gap Between Front Steps and Sidewalk

RPMA PROJECT

INSTALLATION: Wilkes-Barre US Army Reserve Center

PROJECT NUMBER: IC-6

PROJECT NAME: Paint soffit around drill hall

PROJECT DESCRIPTION:

Paint deteriorating soffit around drill hall.

DESCRIPTION OF CURRENT CONDITIONS AND JUSTIFICATION:

The wooden soffit around the drill hall requires paint to prevent further deterioration.

SKETCHES: None

PHOTOS: None

FIELD NOTES: 100 LF

COST ESTIMATE: $200

RPMA PROJECT

INSTALLATION: Wilkes-Barre US Army Reserve Center

PROJECT NUMBER: IC-7

PROJECT NAME: Repair leaking commode

PROJECT DESCRIPTION:

Repair leaking commode in male latrine.

DESCRIPTION OF CURRENT CONDITIONS AND JUSTIFICATION:

Commode in male latrine has a severe leak when flushed.

SKETCHES: None

PHOTOS: None

FIELD NOTES: None

COST ESTIMATE: $120

RPMA PROJECT

INSTALLATION: Wilkes-Barre US Army Reserve Center

PROJECT NUMBER: IC-8

PROJECT NAME: Block entrance to coal storage

PROJECT DESCRIPTION:

Install a permanent barrier to block entrance into unused coal storage area.

DESCRIPTION OF CURRENT CONDITIONS AND JUSTIFICATION:

Currently there entrance to the coal storage area from the boiler room is open. This is a safety hazard since there is a shrply sloped 8 foot dropoff just inside the storage area.

SKETCHES: None

PHOTOS: None

FIELD NOTES: None

COST ESTIMATE: $200

NEW RPMA PROJECTS

CONTRACT

Project Documentation

RPMA PROJECT

INSTALLATION: Wilkes-Barre US Army Reserve Center

PROJECT NUMBER: PA099-1

PROJECT NAME: Electrical Service Upgrade

PROJECT DESCRIPTION:

Replace incoming electrical service including weatherhead, main disconnect, and main breaker panel.

DESCRIPTION OF CURRENT CONDITIONS/JUSTIFICATION:

Weatherhead grommet is shrunken and cracked. Incoming connections are cracked. Main disconnect and main breaker panel are the old Square D design installed in 1952, and replacement parts are unavailable.

RECOMMENDED METHOD FOR ACCOMPLISHING WORK: Contract

ESTIMATED YEARS OF REMAINING LIFE: five

SKETCHES: None

PHOTOS: See Appendix 1

FIELD NOTES: None

COST ESTIMATE: See Appendix 2

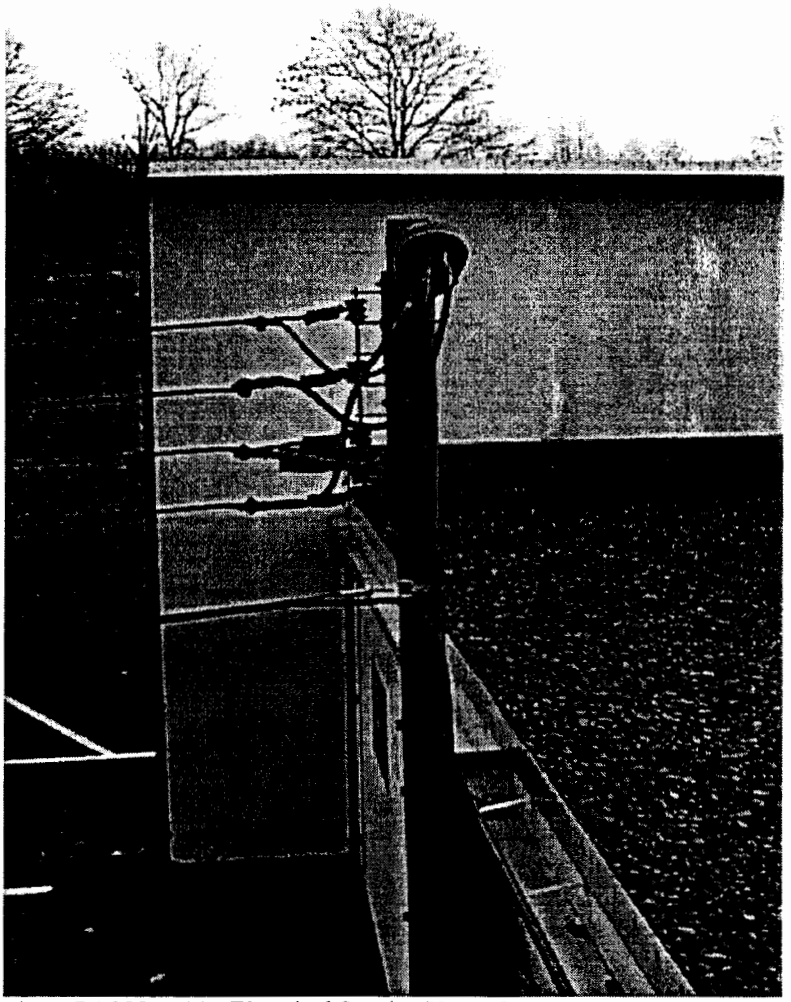

Photo PA099-1-01: Electrical Service Upgrade

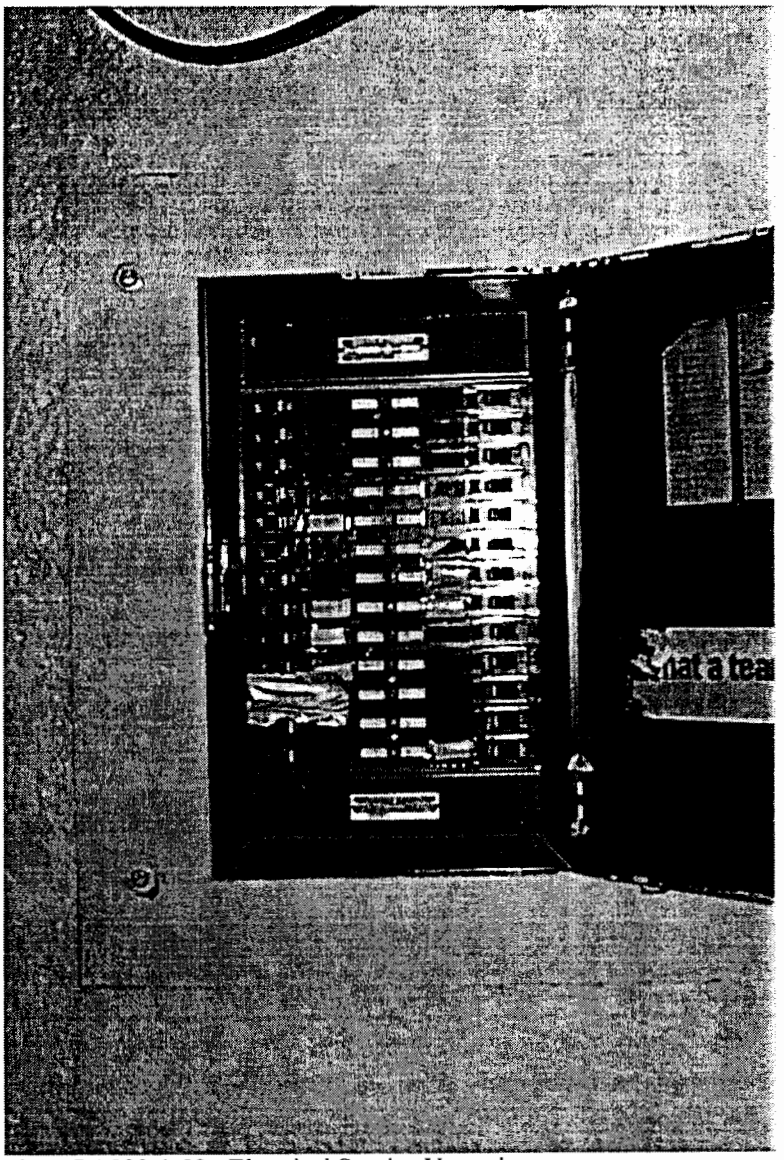

Photo PA099-1-02: Electrical Service Upgrade

COST ESTIMATE

COST ESTIMATE NUMBER: **PA099-1**

TYPE PROJECT: New Work __ Repair __ Maintenance _X_ EIP __ Other *(specify)* _____

RECOMMENDED METHOD OF ACCOMPLISHMENT:
DESIGN: A/E Contract _X_ 416th ENCOM __ Not Required __ Other __
CONSTRUCTION: Contract _X_ Local Purchase __ Self Help/Troop __
SDEH In-House __ Other __

SHORT JOB DESCRIPTION: **Electrical Service Upgrade**

DESCRIPTION OF WORK: DETAILED COST ESTIMATE: (SHEET _1_ OF _1_)

ITEM	UM	QTY	UNIT COST	TOTAL COST
Service Installation, includes breaker, 20' conduit & wire, 3 phase, 4 wire 120/208v, 400 amp	**ea**	**1**	**3,800**	**3,800**
Main Distribution Panel	**ea**	**1**	**2,300**	**2,300**
Service Entrance Cap 3"	**ea**	**1**	**240**	**240**
Sub Total:				**6,340**
OVERHEAD & PROFIT (**25%**)				*1,585*
PROJECT TOTAL:				*7,925*
CONTINGENCY (10%)				*792*
TOTAL REQUEST:				**$8,717**

Estimates are: _X_ Current Year / FY_____ Dollars
Prepared By: **MAJ Todd D. Griffith** **Checked By: MAJ Louis D. Berman**
Date Prepared: **26 April 1997**

RPMA PROJECT

INSTALLATION: Wilkes-Barre US Army Reserve Center

PROJECT NUMBER: PA099-2

PROJECT NAME: replacement foyer

PROJECT DESCRIPTION:

Replace original wooden and single pane window foyer with standard foyer design.

DESCRIPTION OF CURRENT CONDITIONS/JUSTIFICATION:

Wooden foyer frame is weathered and worn. Single pane windows that extend to the ceiling are a major source of heat leak.

RECOMMENDED METHOD FOR ACCOMPLISHING WORK: Contract

ESTIMATED YEARS OF REMAINING LIFE: five

SKETCHES: None

PHOTOS: See Appendix 1

FIELD NOTES: None

COST ESTIMATE: See Appendix 2

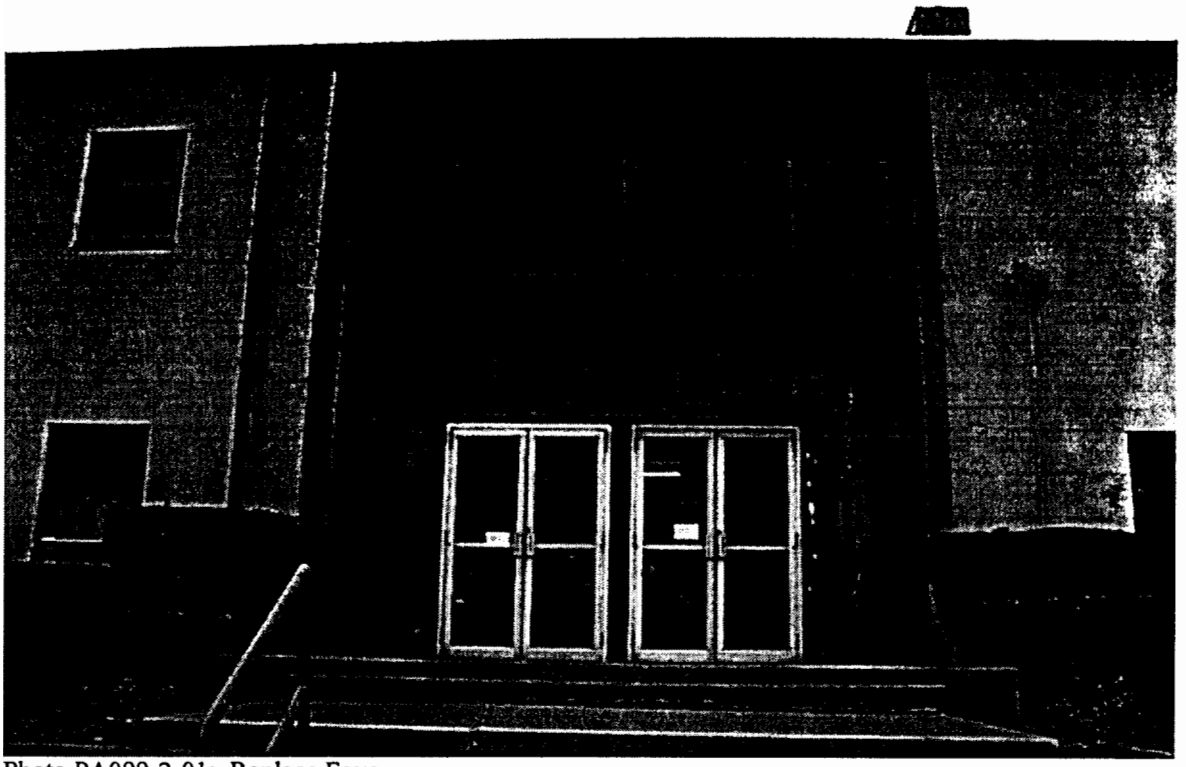

Photo PA099-2-01: Replace Foyer

COST ESTIMATE

COST ESTIMATE NUMBER: **PA099-2**

TYPE PROJECT: New Work __ Repair _X_ Maintenance __ EIP __ Other *(specify)* _____

RECOMMENDED METHOD OF ACCOMPLISHMENT:
DESIGN: A/E Contract _X_ 416th ENCOM __ Not Required __ Other __
CONSTRUCTION: Contract _X_ Local Purchase __ Self Help/Troop __
SDEH In-House __ Other __

SHORT JOB DESCRIPTION: **Replace Foyer**

DESCRIPTION OF WORK: DETAILED COST ESTIMATE: (SHEET _1_ OF _1_)

ITEM	UM	QTY	UNIT COST	TOTAL COST
Replace wood framed entrance/foyer	**ea**	**1**	**34,566**	**34,566**
Sub Total:				**34,566**
OVERHEAD & PROFIT (**25%**)				*8,641*
PROJECT TOTAL:				*43,207*
CONTINGENCY (10%)				*4,320*
TOTAL REQUEST:				**$47,527**

Estimates are: _X_ Current Year / FY_____ Dollars
Prepared By: **MAJ Todd D. Griffith** **Checked By: MAJ Louis D. Berman**
Date Prepared: **26 April 1997**

RPMA PROJECT

INSTALLATION: Wilkes-Barre US Army Reserve Center

PROJECT NUMBER: PA099-3

PROJECT NAME: Install range hood and fire suppression

PROJECT DESCRIPTION:

Gas range requires ventilation hood and fire suppression system.

DESCRIPTION OF CURRENT CONDITIONS/JUSTIFICATION:

Safe operation of the kitchen range requires a ventilation hood and fire suppression system.

RECOMMENDED METHOD FOR ACCOMPLISHING WORK: Contract

ESTIMATED YEARS OF REMAINING LIFE: n/a

SKETCHES: None

PHOTOS: None

FIELD NOTES: None

COST ESTIMATE: See Appendix 2

COST ESTIMATE

COST ESTIMATE NUMBER: **PA099-3**

TYPE PROJECT: New Work __ Repair _X_ Maintenance __ EIP __ Other *(specify)* _____

RECOMMENDED METHOD OF ACCOMPLISHMENT:
DESIGN: A/E Contract _X_ 416th ENCOM __ Not Required __ Other __
CONSTRUCTION: Contract _X_ Local Purchase __ Self Help/Troop __
SDEH In-House __ Other __

SHORT JOB DESCRIPTION: **Install range hood and fire suppression**

DESCRIPTION OF WORK: DETAILED COST ESTIMATE: (SHEET _1_ OF _1_)

ITEM	UM	QTY	UNIT COST	TOTAL COST
Exhaust hood w/fire suppression system	**ea**	**1**	**5,621**	**5,621**
Sub Total:				**5,621**
OVERHEAD & PROFIT (**25%**)				*1,405*
PROJECT TOTAL:				*7,026*
CONTINGENCY (10%)				*702*
TOTAL REQUEST:				**$7,728**

Estimates are:_X_ Current Year / FY_____ Dollars
Prepared By: **MAJ Todd D. Griffith** **Checked By: MAJ Louis D. Berman**
Date Prepared: **26 April 1997**

RPMA PROJECT

INSTALLATION: Wilkes-Barre US Army Reserve Center

PROJECT NUMBER: PA099-4

PROJECT NAME: Replace OMS fascia

PROJECT DESCRIPTION:

Replace fascia around OMS.

DESCRIPTION OF CURRENT CONDITIONS/JUSTIFICATION:

OMS fascia is weathered with cracking and peeling paint. Ventilation louvers are missing, allowing birds to enter and damage ceiling insulation.

RECOMMENDED METHOD FOR ACCOMPLISHING WORK: Contract

ESTIMATED YEARS OF REMAINING LIFE: five

SKETCHES: None

PHOTOS: See Appendix 1

FIELD NOTES: None

COST ESTIMATE: See Appendix 2

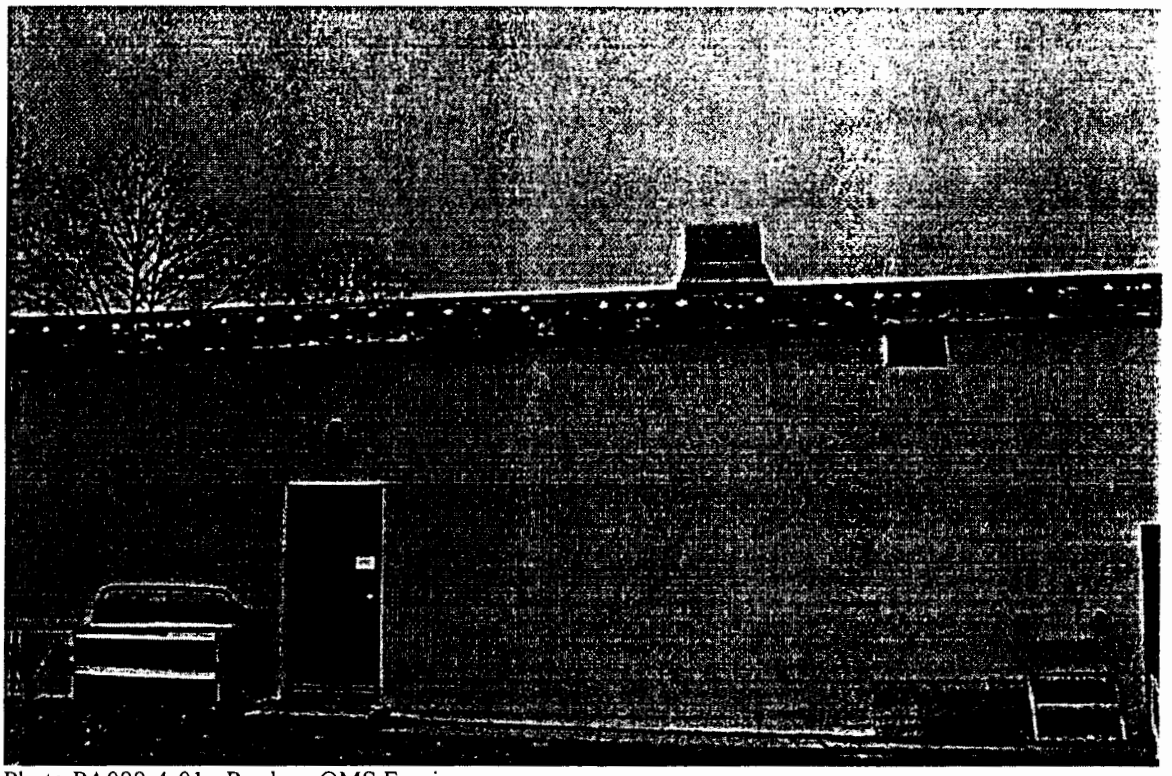

Photo PA099-4-01: Replace OMS Fascia

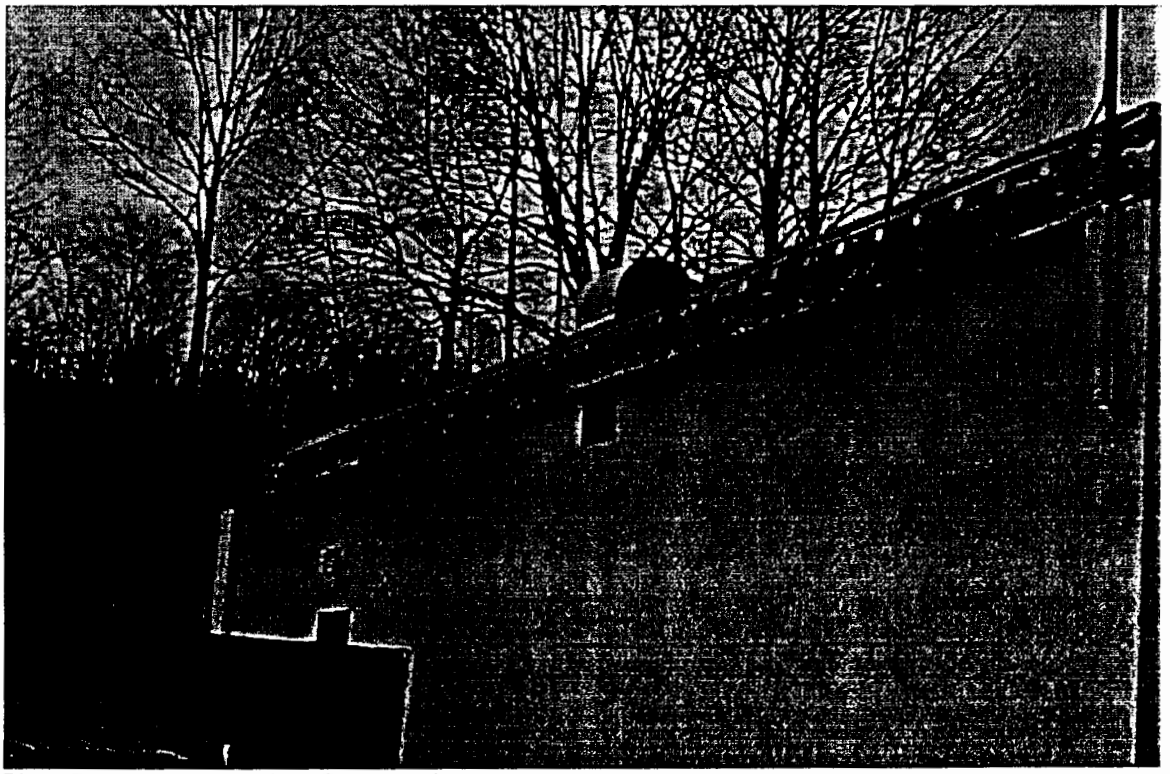

Photo PA099-4-02: Replace OMS Fascia

COST ESTIMATE

COST ESTIMATE NUMBER: **PA099-1**

TYPE PROJECT: New Work __ Repair _X_ Maintenance __ EIP __ Other *(specify)* _____

RECOMMENDED METHOD OF ACCOMPLISHMENT:
DESIGN: A/E Contract _X_ 416th ENCOM __ Not Required __ Other __
CONSTRUCTION: Contract _X_ Local Purchase __ Self Help/Troop __
SDEH In-House __ Other __

SHORT JOB DESCRIPTION: Replace OMS Fascia

DESCRIPTION OF WORK: DETAILED COST ESTIMATE: (SHEET _1_ OF _1_)

ITEM	UM	QTY	UNIT COST	TOTAL COST
Fascia demolition 2x10	**lf**	**250**	**0.63**	**158**
Fascia installation 2x10	**lf**	**250**	**2.95**	**738**
Sub Total:				**896**
OVERHEAD & PROFIT (25%)				*224*
PROJECT TOTAL:				*1120*
CONTINGENCY (10%)				*112*
TOTAL REQUEST:				**$1232**

Estimates are:_X_ Current Year / FY_____ Dollars
Prepared By: **MAJ Todd D. Griffith** **Checked By: MAJ Louis D. Berman**
Date Prepared: **26 April 1997**

RPMA PROJECT

INSTALLATION: Wilkes-Barre US Army Reserve Center

PROJECT NUMBER: PA099-5

PROJECT NAME: replace three overhead doors

PROJECT DESCRIPTION:

Replace three overhead doors in OMS. Install new electrical operators.

DESCRIPTION OF CURRENT CONDITIONS/JUSTIFICATION:

Three wooden overhead doors in the OMS are weathered with cracking and peeling paint. They have been patched, are out of adjustment and have worn and cracked weather seals. Both the door panels and windows have no insulation. New electric operators should be installed with the door replacement.

RECOMMENDED METHOD FOR ACCOMPLISHING WORK: Contract

ESTIMATED YEARS OF REMAINING LIFE: five

SKETCHES: None

PHOTOS: See Appendix 1

FIELD NOTES: None

COST ESTIMATE: See Appendix 2

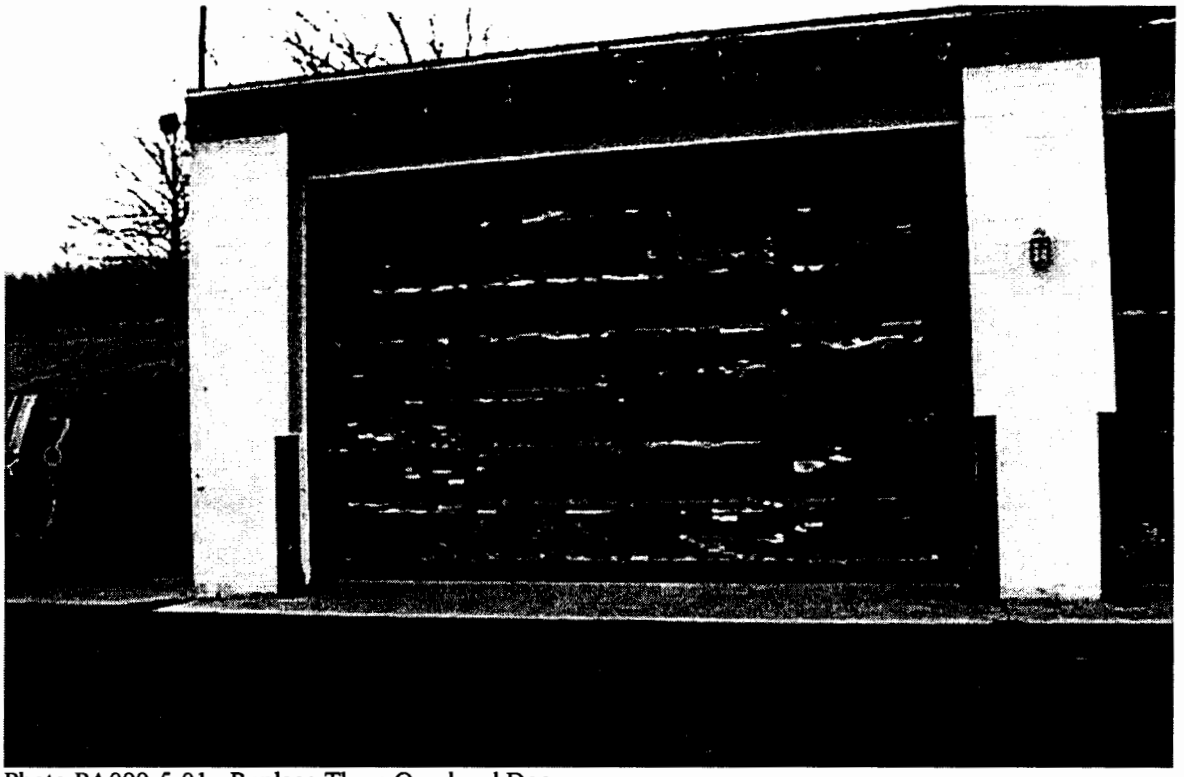

Photo PA099-5-01: Replace Three Overhead Doors

COST ESTIMATE

COST ESTIMATE NUMBER: **PA099-5**

TYPE PROJECT: New Work __ Repair _X_ Maintenance __ EIP __ Other *(specify)* _____

RECOMMENDED METHOD OF ACCOMPLISHMENT:
DESIGN: A/E Contract _X_ 416th ENCOM __ Not Required __ Other __
CONSTRUCTION: Contract _X_ Local Purchase __ Self Help/Troop __
SDEH In-House __ Other __

SHORT JOB DESCRIPTION: **Replace Three Overhead Doors**

DESCRIPTION OF WORK: DETAILED COST ESTIMATE: (SHEET _1_ OF _1_)

ITEM	UM	QTY	UNIT COST	TOTAL COST
Replace overhead door including new electric operator	**ea**	**3**	**6,304**	**18,912**
Sub Total:				**18,912**
OVERHEAD & PROFIT (**25%**)				*4,728*
PROJECT TOTAL:				*23,640*
CONTINGENCY (10%)				*2,364*
TOTAL REQUEST:				**$26,004**

Estimates are:_X_ Current Year / FY_____ Dollars
Prepared By: **MAJ Todd D. Griffith** **Checked By: MAJ Louis D. Berman**
Date Prepared: **26 April 1997**

RPMA PROJECT

INSTALLATION: Wilkes-Barre US Army Reserve Center

PROJECT NUMBER: PA099-6

PROJECT NAME: Drainage improvement

PROJECT DESCRIPTION:

Remove existing retaining wall, regrade to a five to one slope, and replace cracked concrete swale.

DESCRIPTION OF CURRENT CONDITIONS/JUSTIFICATION:

Existing 2 foot wooden retaining wall is failing (falling in and separating). This will allow fill to enter the concrete swale. The exiisting concrete swale is severely cracked, which allows erosion underneath the concrete.

RECOMMENDED METHOD FOR ACCOMPLISHING WORK: Contract

ESTIMATED YEARS OF REMAINING LIFE: five

SKETCHES: None

PHOTOS: See Appendix 1

FIELD NOTES: None

COST ESTIMATE: See Appendix 2

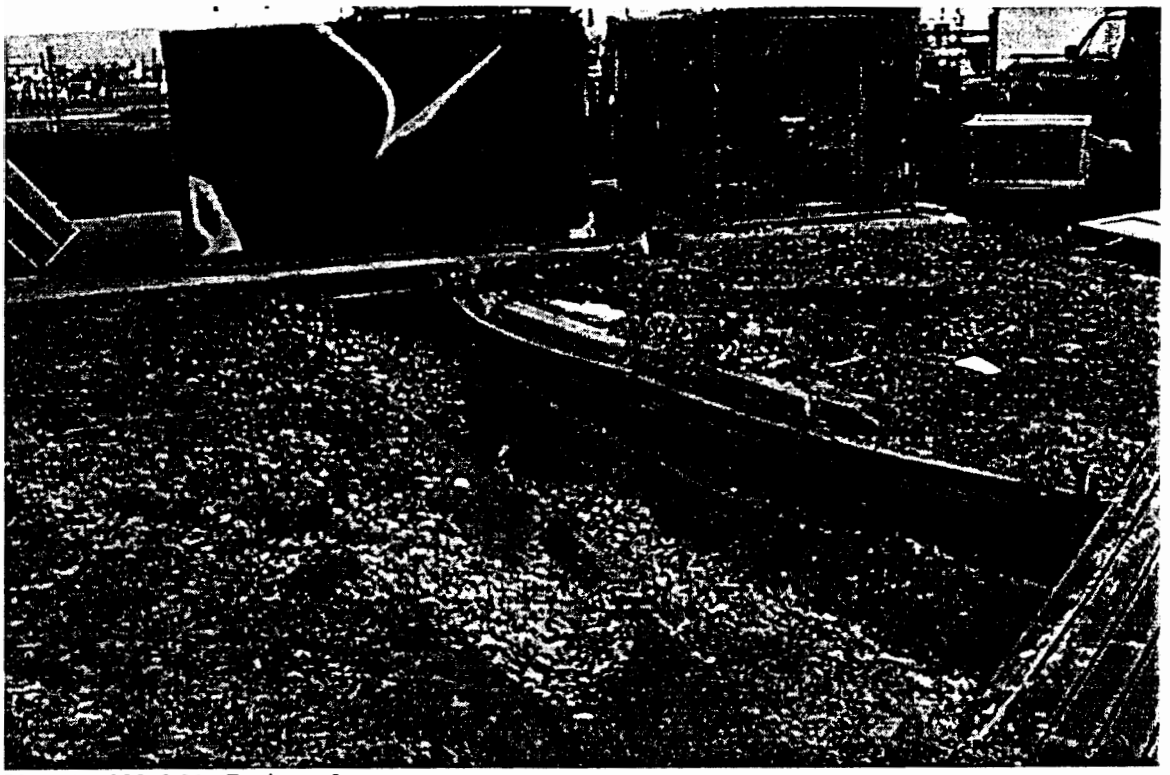

Photo PA099-6-01: Drainage Improvement

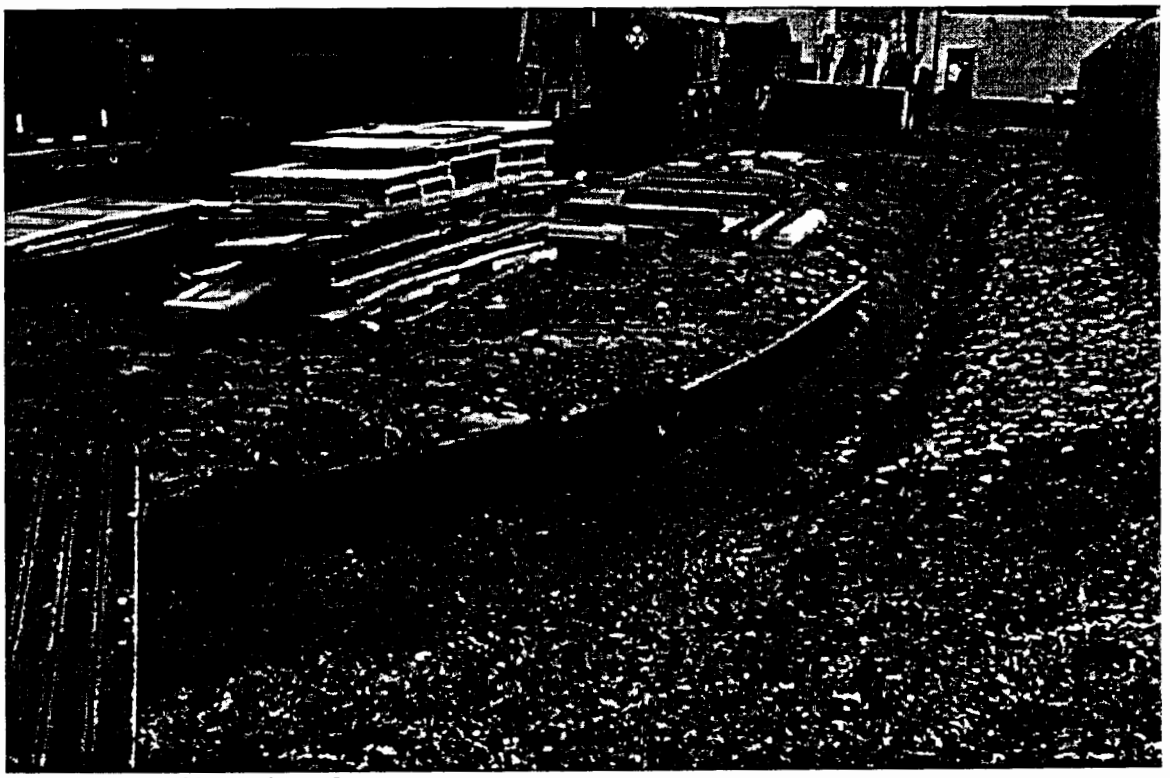

Photo PA099-6-02: Drainage Improvement

COST ESTIMATE

COST ESTIMATE NUMBER: **PA099-6**

TYPE PROJECT: New Work __ Repair _X_ Maintenance __ EIP __ Other *(specify)* _____

RECOMMENDED METHOD OF ACCOMPLISHMENT:
DESIGN: A/E Contract _X_ 416th ENCOM __ Not Required __ Other __
CONSTRUCTION: Contract _X_ Local Purchase __ Self Help/Troop __
SDEH In-House __ Other __

SHORT JOB DESCRIPTION: **Drainage Improvement**

DESCRIPTION OF WORK: DETAILED COST ESTIMATE: (SHEET _1_ OF _1_)

ITEM	UM	QTY	UNIT COST	TOTAL COST
Concrete removal	**sf**	**150**	**3.08**	**462**
Excavation and grading	**cy**	**11**	**12.45**	**137**
Excavation, trim for concrete pour	**sf**	**150**	**0.56**	**84**
Erosion control	**sy**	**43**	**1.16**	**50**
Concrete swale replacement	**sf**	**150**	**23.35**	**3,503**
Sub Total:				**4,236**
OVERHEAD & PROFIT (**25%**)				*1,059*
PROJECT TOTAL:				*5,295*
CONTINGENCY (10%)				*530*
TOTAL REQUEST:				**$5,825**

Estimates are: _X_ Current Year / FY_____ Dollars
Prepared By: **MAJ Todd D. Griffith** **Checked By: MAJ Louis D. Berman**
Date Prepared: **26 April 1997**

EXISTING UNCONSTRAINED WORK REQUIREMENTS

The facility's existing Work Requests were reviewed and it is recommended that the projects listed below remain active in the system.

Bathroom Up-Grade	$ 6,110
Floor Tile Project	34,135
Refinish Wood Floors	14,743
Ceiling and Light Up-Grade	87,880
Replace Doors	13,630

ENCLOSURE 2
ENERGY AUDIT

USAR FACILITY
ENERGY AUDIT REPORT

for the

WILKES-BARRE USARC

WILKES-BARRE,PA

Prepared by the

416TH ENCOM, FETDA

ENGINEER SUPPORT GROUP EAST

FORT INDIANTOWN GAP FET

Performed on

APRIL 22 - 23, 1997

USAR FACILITY ENERGY AUDIT REPORT

TABLE OF CONTENTS

Section 1 - USAR Facility Energy Audit Data Sheet

Section 2 - Executive Summary

Section 3 - Facility Checklist Summary

Section 4 - Potential Energy Conservation Opportunities

Appendix A - Facility Energy Audit Checklists
- **Appendix A.1 -** Building Construction Checklists
  - Appendix A.1.1 - Building Envelope
  - Appendix A.1.2 - Plumbing
  - Appendix A.1.3 - Electrical
  - Appendix A.1.4 - HVAC
- **Appendix A.2 -** Operations and Maintenance Checklists
  - Appendix A.2.1 - Building Envelope
  - Appendix A.2.2 - Plumbing
  - Appendix A.2.3 - Electrical
  - Appendix A.2.4 - HVAC

Appendix B - Count and Type of Light Fixtures

Appendix C - Count and Type of Electric Motors

Section 1 - Facility Data Sheet
USAR Facility Energy Audit Report
Supporting RSC

FACILITY NAME: Wilkes-Barre USARC

LOCATION: Wilkes-Barre, PA

FACILITY ID NUMBER: PA099

FACILITY TYPE: USARC **X** ; OMS **X** ; AMSA ; ECS ;
Specify Other

TELEPHONE NUMBER OF FACILITY MANAGER: (717) 824-3588

AUDIT TEAM DESIGNATION: **FORT INDIANTOWN GAP FACILITY EVALUATION TEAM**

Address: Bldg 11-19, Fort Indiantown Gap
Annville, Pa. 17003

Team Leader: LTC Louis D. Berman

Team Members: MAJ(P) Todd Griffith, CPT Joel Hager,
1LT Bob Schwartz, SFC James Newcomer

FACILITY PERSONNEL INTERVIEWED: **Mr. Bill Henry, FC**
Mr. Johnny Stevens, FMS, CST#2

AUDIT DATE: **April 22-23, 1997**

DATE OF LAST AUDIT: **None**

Main Building SF:	16,393
OMS SF:	3,609
Assembly Hall SF:	3,612
TOTAL SF:	23,614

Section 2 - Executive Summary
USAR Facility Energy Audit Report

INSTALLATION NAME:	**Wilkes-Barre USARC,**
INSTALLATION NO:	**PA099**
INSTALLATION LOCATION:	**1001 Hwy 315, Wilkes-Barre, PA**
DATE TFA CONDUCTED:	**22-23 April 1997**

1. An Energy Audit was performed on the Wilkes-Barre USARC with the results identified in the following pages. The Center consists of two buildings; the main USARC, and the Organization Maintenance Shop (OMS). The buildings are presently used to capacity. The surrounding area is commercial with PA State highway 315 located within 25 feet of the front of the USARC. The USARC is occupied by the HSD, 365th Engineer Detachment (128 personnel assigned), and the 828th QM Platoon (69 personnel assigned. The OMS building and motor pool parking area is fenced; the POV parking-lot is not fenced.

2. The USARC is in good physical condition but needs effort expended on basic house cleaning. The facility has recently received energy efficient upgrades: it is heated by three 6-year old gas fired modular boilers and the domestic hot water is provided by a newly installed 100 gallon water heater. The USARC also had energy efficient windows installed 6 years ago with the exception of the vestibule at the front entrance. The USARC needs to replace all its existing lighting with energy efficient lighting, and replace most exterior doors. The wooden roll up doors of the OMS building should be replaced with insulated doors, or be painted and weather-stripped.

3. Mr. Johnny Stevens (CST #2, Scranton, PA) prepared and submitted a project list with construction cost estimates (see attached list dated 8 January 1997). The list includes ceiling and light upgrades, and the replacement of most of exterior doors.

However, toilet-room lighting replacement was inadvertently left out of the list, as well as the replacement of the kitchen door (with accompanying screen door) and the 3 roll up doors of the OMS building. The list also failed to include weather-stripping for the two exit doors in the assemble hall.

Section 3 - FACILITY CHECKLIST SUMMARY
USAR Facility Energy Audit Report

I. - BUILDING CONSTRUCTION PRACTICES

Checklist Area	Number of Checklist Items Showing Good Conservation Practices in Effect		
	#YES	#NO	#N/A
A. - Building Envelope	7	2	0
B. - Plumbing	4	3	3
C. - Electrical	4	4	0
D. - HVAC	4	5	3
E. - **Total Responses**	**19**	**14**	**6**

II . - OPERATION AND MAINTENANCE PRACTICES

Checklist Area	Number of Checklist Items Showing Good Conservation Practices in Effect		
	#YES	#NO	#N/A
A. - Building Envelope	4	2	1
B. - Plumbing	2	2	4
C. - Electrical	5	1	0
D. - HVAC	5	4	10
E. - **Total Responses**	**16**	**9**	**15**

Section 4 - POTENTIAL ENERGY CONSERVATION OPPORTUNITIES

ECO #ECO Description

The USARC has received recent energy efficient upgrades (6 year old modular gas fired heater and window replacement). There are however other projects which should be considered which would improve the overall energy efficiency of the facility:

ECO #	ECO Description
ECO 10	-repair ceiling insulation in the OMS
ECO 85	-install energy efficient lighting throught-out the building
ECO 83	-reduce time of operational lighting
ECO 16	-install insulated windows in front vestibule
N/A	-install motion detectors in classrooms and latrines

Appendix A FACILITY ENERGY AUDIT CHECKLIST
Appendix A.1 - BUILDING CONSTRUCTION CHECKLIST
Appendix A.1.1 - BUILDING ENVELOPE
USAR Facility Energy Audit Report

INSTALLATION NAME: Wilkes-Barre USARC,
INSTALLATION NO: PA099
INSTALLATION LOCATION: 1001 Hwy 315, Wilkes-Barre, PA
DATE TFA CONDUCTED: 22-23 April 1997

AREA OF EVALUATION	YES	NO	N/A	N/OBS	REMARKS
1. Heavily used entrances have vestibule (airlock) door system.	x				front entrance only
2. Wind screens installed to protect doors from prevailing winds.		x			
3. Space around outside wall penetrations well sealed to reduce infiltration.	x				
4. Building has required insulation and it is in good condition.	x				overall yes, however OMS needs ceiling insulation repaired.
5. Energy efficient windows (multi-pane or storm) provided.	x				yes, except for front vestibule
6. Energy efficient doors (i.e. insulated) provided.		x			
7. Infiltration of unconditioned air minimized.	x				
8. Automatic closures and weather-stripping installed on doors between conditioned and unconditioned spaces.	x				
9. Is winter sun used to heat rooms?	x				
TOTALS	07	02	0	0	

Appendix A.1.4 - BUILDING CONSTRUCTION CHECKLIST/HVAC
USAR Facility Energy Audit Report

AREA OF EVALUATION	YES	NO	N/A	N/OBS	REMARKS
1. Automatic setback controls or Energy Monitoring Control Systems provided for heating and cooling systems?		x			thermostatic valves located on each convector
2. Outer surfaces of boilers insulated to reduce heat loss?	x				
3. Boiler combustion air taken from top of boiler room to provide warmer air for increased efficiency?		x			
4. Thermostats are positioned away from outside walls, out of drafts, and in areas of frequent use?			x		thermostatic valves located on each convector
5. Individual controls provided to maintain lower temperatures in unoccupied areas?		x			
6. Automatic louvers/dampers provided on outside air openings?		x			
7. All heating/cooling piping and equipment (pipes, valves,boilers, etc.) insulated and in good condition?	x				
8. Are radiators/heat registers shut off completely in vestibules, corridors, stairways and lobbies?		x			
9. Are drapes, shades or blinds drawn on windows where practical during cooling periods?	x				

Appendix A.1.4 - BUILDING CONSTRUCTION CHECKLIST/HVAC (con't)
USAR Facility Energy Audit Report

AREA OF EVALUATION	YES	NO	N/A	N/OBS	REMARKS
10. All heating equipment (heat exchanger, economizers, condensate tanks) insulated and in good condition?			x		
11. Ducts passing through unconditioned spaces are insulated?			x		
12. High efficiency (EER at least 85) window air conditioners only?	x				
TOTALS	04	05	03	0	

Appendix A.2.3 - OPERATIONS AND MAINTENANCE CHECKLIST/ELECTRICAL
USAR Facility Energy Audit Report

AREA OF EVALUATION	YES	NO	N/A	N/OBS	REMARKS
1. Exterior lights turned off during daylight hours?	x				
2. Is there an energy conservation program?	x				
3. Are interior lights turned off in unoccupied areas?	x				
4. Partitions, lockers, etc. located so as to not unnecessarily block lighting?	x				
5. Are major appliances turned off during non drill periods?	x				
6. Have lights been removed from vending machines?		x			
TOTALS	05	01	00	0	

Appendix A.2.4 - OPERATIONS AND MAINTENANCE CHECKLIST/HVAC
USAR Facility Energy Audit Report

AREA OF EVALUATION	YES	NO	N/A	N/OBS	REMARKS
1. All coils, boiler tubes and heat transfer surfaces clean to maintain maximum heat transfer?	x				
2. System free from steam or water leaks?	x				
3. Meter and gauges operational?	x				
4. Are steam traps in place and maintained properly? (Bled periodically and repaired)			x		hot water system
5. Are radiators in vestibules, corridors, stairwell, and lobbies shut off?		x			
6. Thermostat setting adjusted during periods of non-occupancy? (50-55 DEG F for heating and 80-85 DEG F for cooling)		x			
7. Thermostat settings set at 55 DEG F for areas of physical work? (Maintenance shops)		x			
8. Are heating vents and ducts unobstructed?			x		hot water system
9. Are cooling systems shut down during periods of non-occupancy?			x		no central air-conditioning

Appendix A.2.4 - OPERATIONS AND MAINTENANCE CHECKLIST/HVAC (con't)
USAR Facility Energy Audit Report

AREA OF EVALUATION	YES	NO	N/A	N/OBS	REMARKS
10. Cooling limited to occupied areas only?			x		
11. Doors between conditioned and unconditioned areas are closed?			x		
12. Central units and cooling towers are clean and free from scale?			x		
13. Is evidence of preventative maintenance (PM) schedule in effect?	x				
14. Is outside air used for cooling?			x		
15. Room temperatures maintained properly during cooling season? (76-80 F)			x		
16. Refrigerant and water lines free of leaks?			x		
17. Are internal heat generating units minimized? (copiers, refrigerators, etc)	x				
18. Air conditioning vents or outside air intakes are clear from obstructions?			x		
19. Are window air conditioners covered during heating season?		x			
TOTALS	05	04	10	0	

Appendix B - Count and Type of Lights
USAR Facility Energy Audit Report

ECIP LIGHTING SURVEY
Wilkes-Barre USAR Center

Room Number	Fixture Type	Ballast Type	Number Fixtures	Lamps/ Fixture	Watts/ Lamp	Total No. of Lamps	Lamp Length	Room Use
1st Floor								
100	Fluor	EM	19	1	34	19	4	Lobby / Corr.
101	Fluor	EM	3	4	34	12	4	Office
101	Inc	N/A	1	1	60	1	N/A	Office
102	Fluor	EM	4	4	34	16	4	Office
103	Fluor	EM	2	4	34	8	4	Office
104	Fluor	EM	1	4	34	4	4	Arms Room
104	Fluor	EM	5	2	34	10	4	Arms Room
104	Inc	N/A	4	1	200	4	N/A	Arms Room
105	Inc	N/A	2	1	60	2	N/A	Electric Room
106	Fluor	EM	2	4	34	8	4	Office
107	Fluor	EM	1	4	34	4	4	Office
108	Halide	N/A	20	1	1500	20	N/A	Drill Hall
108	Fluor	EM	6	2	34	12	4	Drill Hall
109	Fluor	EM	4	4	34	16	4	Kitchen
110	Inc	N/A	2	2	60	4	N/A	Female Latrine
110	Inc	N/A	1	2	60	2	N/A	Female Latrine
111	Inc	N/A	4	1	60	4	N/A	Mech. Room
112	Fluor	EM	1	2	34	2	4	Latrine
112	Inc	N/A	3	1	60	3	N/A	Latrine
113	Fluor	EM	6	2	34	12	4	NBC Room
114	Fluor	EM	4	2	34	8	4	Supply
114	Fluor	EM	2	4	34	8	4	Supply
115	Inc	N/A	2	1	200	2	N/A	Storage
115	Fluor	EM	1	2	34	2	4	Storage
116	Fluor	EM	6	4	34	24	4	Storage
116	Inc	N/A	3	1	200	3	N/A	Storage
117	Fluor	EM	3	4	34	12	4	Storage
118	Fluor	EM	6	4	34	24	4	Mess Storage
119	Fluor	EM	2	2	34	4	4	Male Latrine
119	Inc	N/A	3	1	60	3	N/A	Male Latrine
120	Fluor	EM	8	4	34	32	4	Locker Room
	Fluor	EM	1	1	34	1	4	Stair 1
	Fluor	EM	1	1	34	1	4	Stair 2
2nd Floor								
200	Fluor	EM	16	1	34	16	4	Corridor
201	Fluor	EM	8	3	34	24	4	Classroom
202	Fluor	EM	3	4	34	12	4	Admin/Ops
203	Fluor	EM	4	4	34	16	4	CDR's Office
204	Fluor	EM	4	4	34	16	4	Office
205	Fluor	EM	4	4	34	16	4	Office
206	Fluor	EM	2	4	34	8	4	Mail Room
207	Fluor	EM	10	4	34	40	4	Admin/Ops
208	Fluor	EM	12	2	34	24	4	Classroom
209	Fluor	EM	12	2	34	24	4	Classroom
210	Fluor	EM	12	2	34	24	4	Classroom
212	Fluor	EM	15	2	34	30	4	Locker Room
213	Inc	N/A	1	1	60	1	N\A	Jan. Closet
213A	Fluor	EM	2	2	34	4	4	Supply Stor.
Stair 1	Fluor	EM	1	2	34	2	4	Stair 1
Stair 2	Fluor	EM	1	1	34	1	4	Stair 2

Appendix B - Count and Type of Lights
USAR Facility Energy Audit Report

ECIP LIGHTING SURVEY *Wilkes-Barre USAR Center*								
Room Number	Fixture Type	Ballast Type	Number Fixtures	Lamps/ Fixture	Watts/ Lamp	Total No. of Lamps	Lamp Length	Room Use
OMS								
M-1	Fluor	EM	39	2	34	78	4	Maint. Bay
M-1			2	2	68	4	8	POL Cage
Outside								
Spot	Inc	N/A	5	1	300	5	N/A	Site
Flood	LPS	N/A	10	1	1500	10	N/A	Site
Bldg.	Inc	N/A	2	1	100	2	N/A	Site

Appendix C - Count and Type of Electric Motors
USAR Facility Energy Audit Report

MOTORS				
QTY	TAG	MOTOR(HP)	VOLTAGE	USE
1	EF-1	1	208 V, 3 Ph	Veh. Exhaust
1	P-1	5	208 V, 3 Ph	HW Pump

BOILER SCHEDULE					
ITEM	AREA	FUEL	BTUh INPUT	TYPE	VOLTAGE
B-1	Mech.Rm.	NAT. GAS	375,000	Hot Water	120V,1PH
B-2	Mech.Rm.	NAT. GAS	375,000	Hot Water	120V,1PH
B-3	Mech.Rm.	NAT. GAS	375,000	Hot Water	120V,1PH

WATER HEATER SCHEDULE					
ITEM	LOCATION	FUEL	BTUh INPUT	PILOT	VOLTAGE
WH-1	Mech.Rm.	NAT.Gas	75,000	No	120V,1PH

ENCLOSURE 3
SAFETY CHECKLIST ASSESSMENT

DEPARTMENT OF THE ARMY
416TH ENGINEER COMMAND
Engineer Support Group - East

USAR FACILITIES SAFETY CHECKLIST

GENERAL

Checklist Summary Descriptions ..... Page 1
Purpose.....Page 2
Safety Assessment Overview Sheet ... Page 3-4
References ..... Page 5

SPECIFIC INSPECTION CHECKLIST

	CHECKLIST APPLICABLE YES	NO
Battery Shop	____	__X__
Chemical Storage	__X__	____
Compressed Gas Cylinders	__X__	____
Electrical/Mechanical	__X__	____
Fire Safety/Egress	__X__	____
Flammable/Combustible Liquid Storage	__X__	____
Housekeeping	__X__	____
Ladders	__X__	____
Shop and Motorpool Safety	__X__	____

INSTALLATION NAME: Wilkes-Barre USAR Center
INSTALLATION NUMBER: PA099
INSTALLATION LOCATION: 1001 Highway 315 South, Wilkes-Barre, PA 18701-6926

Checklists marked YES are applicable to this facility and are included in the report. Checklists marked NO are not applicable and were not reviewed.

USAR FACILITIES SAFETY CHECKLIST

GENERAL

PURPOSE: This document is a multi-part safety checklist for evaluation of U.S. Army Reserve (USAR) facilities. It is structured as a series of independent checklists which may be used to conduct a screening evaluation of low risk USAR facilities. The checklists allow use by qualified 416th Engineer Command, Facility Engineer TDA Team personnel, with minimal additional safety training.

CHECKLIST SUMMARY DESCRIPTION: Checklists are alphabetically listed by major subject area. A brief description of the material covered by each checklist is provided below. The evaluator should initially screen the checklists to eliminate those that obviously do not apply to the specific USAR facility being evaluated. Any "NO" answers on any checklist will require that the evaluator place a comment in the comment section of that particular checklist.

BATTERY SHOP: Ventilation and operational precautions.

CHEMICAL STORAGE: Ventilation, and emergency showers.

COMPRESSED GAS CYLINDERS: Storage.

ELECTRICAL/MECHANICAL: Installation, grounding, protection from high voltage and procedures for guarding mechanical facilities equipment.

FIRE SAFETY/EGRESS: Signs, fire extinguisher placement and egress for fire safety and personnel protection.

HOUSEKEEPING: Storage, housekeeping, aisles, guard rails and stair opening protection.

LADDERS: Standards and maintenance, for use of ladders.

SHOP and MOTORPOOL SAFETY: Ventilation, cranes, tire cages and compressed air systems.

SAFETY ASSESSMENT EXECUTIVE SUMMARY

SECTION 1 - SAFETY ASSESSMENT EXECUTIVE SUMMARY
FOR THE USAR SAFETY ASSESSMENT OF:

INSTALLATION NAME: Wilkes-Barre USAR Center
INSTALLATION NUMBER: PA099
INSTALLATION LOCATION: 1001 Highway 315 South, Wilkes-Barre, PA 18701-6926

1. This facility is located in the north east tier of mountains in Pennsylvania. The center is located south of Sunbury and east of interstate 81. The 828th QM CO.(-) with an assigned strength of 70 soldiers and HSD 365th ENGR BN with an assigned strength of 128 soldiers are located here. The center is located adjacent to PA highway 315 and PA 115 in an area on the north east side of Wilkes-Barre.

2. There were seven- RAC 3 findings for this facility. The first one relates to a coverplate missing from one outlet and one junction box. There were six additional RAC 3 findings that were related to no GFIC outlets or breakers, shut off valves in the mechanical room were not identified, furnaces not labeled and several burned out Exit light bulbs and dead emergency light batteries. There is an old concrete enclosed coal bin onsite. The bin has a dangerous unguarded opening access through the boiler room which is poorly lit. This issue has been identified in the RPMA section of the TFA report. There is no sprinkler system in this facility. There are several power strips being used in this facility. The building was built in 1952. The current power requirements have outgrown the available outlets. The remaining seven-RAC 4 findings are primarily lower levels of the frequency and severity of previously mentioned issues.

3. The facility is in need of some outside building surface painting and down spouting repair. Mr. Henry and Mr. Stevens accompanied SFC Newcomer during most of his walk through to familiarize themselves with the safety requirements checklist. One completed draft copy was left at the center with Mr. Henry. A copy of the 99th RSC Standard Army and Occupational Health Inspection findings was also left as an attached to this form.

James P. Newcomer, SFC
416th ENCOM
Safety Inspector

Louis D. Berman
LTC, EN, USAR
416th Team II Leader, FIG

REFERENCES

1. Code of Federal Regulation (CFR) 1910 Labor

   Note: All references to 29 CFR 1910 will be in the form 1910.xxx

2. ANSI C2 National Electrical Safety
3. ANSI Z358.1 Emergency Eyewash and Shower Equipment
4. ANSI Z41 Safety-Toe Footwear

   ANSI Z89.1 Industrial Workers, Protective Headwear

   ANSI Z87.1 Occupational and Educational Eye and Face Protection

5. AR 11-34 The Army Respiratory Protection Program
6. AR 385-10 The Army Safety Program
7. AR 385-55 Safety, Prevention of Motor Vehicle Accidents
8. AR 40-5 Preventive Medicine
9. AR 420-90 Fire Prevention and Protection
10. AR 700-68 Storage and Handling of Compressed Gases and Gas Cylinders ASME Boiler and Pressure Vessel Code
11. DA Pam 40-501 Hearing Conservation
12. DOD 4145.19-R-1 Storage and Material Handling
13. FM 10-68 Aircraft Refuelling
14. FM 10-69 Petroleum Supply Pint Equipment Operation
15. FM 10-69 Petroleum supply Point Equipment and Operations
16. FM 43-5 Unit Maintenance Operations
17. National Electrical Code (NEC), ANSI/NFPA 70
18. National Fire Protection Agency (NFPA) 410
19. TB 43-0212 Army Oil Analysis Program Guide for Leaders and Users
20. TB 43-0151 Inspection and Test of Air and Gas Compressors
21. TB 385-4 Requirements for Maintenance of Electrical and Electronic Equipment
22. TB Med 503 the Army Industrial Hygiene Program
23. TC 11-6 Grounding Techniques
24. TM 9-2320-209-20-3-2 Organizational Level for 2 1/2 ton, 6X6, M44A1, and M44A2
25. TM 9-6140-200-14 Operator's, Unit, Direct Support and General Support Maintenance Manual for Lead-Acid Storage Batteries
26. TM 38-410 Storage and Handling of Hazardous Material

ACTIVITY/AREA: CHEMICAL STORAGE

INSPECTOR: SFC James P. Newcomer DATE: 23 Apr 97

Note: All "NO" answers require a comment in the comment section.

ITEM	YES	NO	NA
1. Is a deluge shower and emergency eyewash provided where the spillage of corrosive chemicals or other hazardous materials is possible? Is this equipment within a straight-line distance of less than 100 feet of the hazard with no obstacles, curves, etc. in the path of travel? (TM 38-410)	X		
2. Is adequate ventilation of chemical storage areas provided? (TM 38-410)	X		

COMMENTS:

Item	Location:	RAC:	Comment:

ACTIVITY/AREA: COMPRESSED GAS

INSPECTOR: SFC James P. Newcomer DATE: 23 APR 97

Note: All "NO" answers require a comment in the comment section.

ITEM	YES	NO	NA
1. When compressed gas cylinders are stored inside of buildings, are they stored in a well ventilated, dry location, at least 20 feet from highly combustible materials such as oil or excelsior? (1910.252(a)(2)(b)(ii))	X		
2. When cylinders are standing upright during use or storage, have precautions been taken to prevent accidental upsetting or falling (chained or strapped to structure)? (1910.252(a)(2)(ii)(b))	X		

COMMENTS:

Item	Location:	Comment:

ACTIVITY/AREA: ELECTRICAL/MECHANICAL

INSPECTOR: SFC James P. Newcomer DATE: 23 Apr 97

Note: All "NO" answers require a comment in the comment section.

ITEM	YES	NO	NA
1. Are live parts of electrical equipment operating at 50 volts or more guarded against accidental contact by being enclosed in approved cabinets or other approved enclosures? (1910.303(g)(2))	X		
2. Is installed electrical equipment free from recognized hazards likely to cause death, serious physical injury or fire? (1910.303)(b)(1))	X		
3. Are outside power lines located a minimum of 10 feet above sidewalks or platforms; 12 feet over areas subject to vehicle traffic, other than trucks; 15 feet for truck traffic; and a minimum of 18 feet over public streets, alleys, roads, and driveways? (1910.304(c)(2))	X		
4. Are receptacles grounded by being installed in a complete metallic raceway or by a separate grounding conductor (3 wire) and all receptacles electrically connected to the grounding conductor (wire)? (1910.305(a)(2)(iii)(c))	X		
5. Does each electrical outlet box, pull box, junction box, and cabinet have an installed face plate, cover or canopy cover and are unused openings in cabinets and boxes effectively closed? (1910.305(b)(1))		X	
6. Is water or moisture prevented from entering/accumulating within electrical cabinets, panel boards and junction boxes? (1910.305(b)(1))	X		
7. Are weatherproof enclosures used in outside locations or wet locations? (1910.305(e)(2))	X		

COMMENTS:

Item	Location:	RAC:	Comment:
5	Rm 117	4	Coverplate missing on junction box in ceiling.
5	Red Sign	4	Non-live wires exposed for lighting sign.
5	Assy. Hall	3	Cover plate on outlet for Pepsi Machine missing.

ACTIVITY/AREA: ELECTRICAL/MECHANICAL

INSPECTOR: SFC James P. Newcomer DATE: 23 Apr 97

Note: All "NO" answers require a comment in the comment section.

ITEM	YES	NO	NA
8. Are flexible cords and cables prohibited from use as substitute for permanent wiring of a structure, and prohibited from being run through holes in walls, ceilings, floors, doorways, windows or similar openings? (1910.305(g)(1)(iii))	X		
9. Are attachment adapter plugs with wire "pigtails" prohibited from being utilized? (NEC 70, Article 410-58)	X		
10. Have electrical outlets (outside/inside) that are within six feet of a wet area (i.e. sink) been converted to Ground Fault Circuit Interrupters (GFCI) outlets? (NEC 70, Article 210-8)		X	
11. ELECTRICAL CABINETS:			
Are cabinets covers properly installed and in serviceable condition? (NEC 70, Article 373-10)		X	
Are circuit breakers properly labeled? (1910.303(f))	X		
Are all breakers inside the breaker box free of cracks and deterioration? (1910.303(b))		X	
Are electrical cabinet doors kept closed except for maintenance and/or servicing? (1910.303(g)(2))	X		
Are warning signs placed on high voltage boxes and ground mounted transformers? (1910.303(g)(2))		X	
12. Are entrances to buildings, rooms and other guarded locations containing exposed live parts locked and marked with conspicuous warning signs forbidding unqualified persons to enter? (1910.303(g)(2)(iii) and (h)(2))	X		

COMMENTS:

Item	Location:	RAC:	Comment:
10	Kitchen	3	Outlet for Microwave oven within 6 ft of sink. Fryer within 2 ft of std outlet.
11a	Hallway	4	Breaker missing from panel is covered with duct tape.

ACTIVITY/AREA: ELECTRICAL/MECHANICAL

INSPECTOR: SFC James P. Newcomer DATE: 23 Apr 97

Note: All "NO" answers require a comment in the comment section.

ITEM	YES	NO	NA
13. Are markings to include manufacturer's name/trademark and voltage/current/wattage ratings present on equipment and of sufficient durability to withstand the environment where present? (1910.303(e))	X		
14. (DATA PROCESSING SYSTEMS-DISCONNECTING MEANS) - Is a disconnecting means provided and readily accessible to the operator at the principle exit door to disconnect the power to all electronic equipment in data processing or computer rooms? (1910.306(e))			X
15. Are all alternating current systems of 50 volts to 1000 volts effectively grounded? (1910.304(f)(1)(iv))	X		
16. Is the path to ground from circuits, equipment, and enclosures permanent and continuous? (1910.304(f)(4))	X		
17. Are boilers/furnaces properly labeled or identified? (TB 43-0151)		X	
18. Are gas/fuel lines located in mechanical room labeled or identified? (TB 43-0151,)	X		
19. Are emergency shut off valves for gas/fuel lines identified? (TB 43-0151)		X	
20. Are guards/shields to prevent worker entanglement properly installed on motors, pumps, gears, belts, and fans? (1910.212(a)(1)	X		
21. Is the mechanical room adequately ventilated to allow for proper boiler or furnace operations? (TB 43-0151)	X		
22. Are the pressure shut-off valve and/or pressure relief valves on air compressors, boilers, water heaters, and other such equipment functional? (TB 43-0151)	X		

COMMENTS:

Item	Location:	RAC:	Comment:
17	Boiler Rm	4	Furnaces not labeled.
19	Boiler Rm	3	Shut off valves are not easily identifiable.

ACTIVITY/AREA: FIRE SAFETY

INSPECTOR: SFC James P. Newcomer DATE: 23 Apr 97

NOTE: All "NO" answers require a comment.

ITEM	YES	NO	NA
1. Are all sleeping areas equipped with operational smoke detectors for early warning of smoke and/or fire? (NFPA Life Safety Code 101, 17-3.4.4)			X
2. Are emergency lights installed and operating properly? (1910.36(b)(6))		X	
3. Are all fire extinguishers, except pressurized water extinguishers, being hydrostatic tested every twelve years? Five years for pressurized water extinguishers? (1910.157(f)(1))	X		
4. Are fire extinguishers hung on brackets or mounted in unlocked cabinets with the top of the extinguishers not more than 5 feet above the floor for extinguishers with a gross weight at or below 40 pounds; 3 above the floor for extinguishers with a gross weight above 40 pounds and not being used as door stops? (1910.157(c)(1))	X		
5. Is material stacked such that the minimum vertical clearance between emergency sprinklers (interior) and material(s) below is at least 18 inches? (1910.159(c)(10))			X
6. Are alarm systems maintained in operating condition, except when undergoing repairs or maintenance? (1910.165(d)(1))	X		
7. Are gas fired devices, which are used to generate heat for comfort such as furnaces and space heaters, vented to an external atmosphere to avoid the accumulation of combustible/noxious products of decomposition? (NFPA 54, Article 7.2.1)	X		

COMMENTS:

Item	Location:	RAC:	Comment:
2	Kitchen	3	Emergency lights inoperable outside kitchen in hall and at south end of 1st floor hallway.
5	All		No Sprinkler system

ACTIVITY/AREA: FIRE SAFETY (MEANS OF EGRESS)

INSPECTOR: SFC James P. Newcomer DATE: 23 Apr 97

NOTE: All "NO" answers require a comment.

ITEM	YES	NO	NA
MEANS OF EGRESS:			
1. In hazardous areas, or where employees may be endangered by the blocking of any single means of egress due to fire or smoke, is there at least two means of egress remote from each other? (1910.36 (b)(3)(8))	X		
2 Do all exits discharge directly to the street or other open space that gives safe access to a public way? (1910.37(h)(1))	X		
3 Are all exits unlocked or unfastened so that free escape is not prevented? (1910.36(b)(4))		X	
4 Can all exits be reached without going through a kitchen, storage room, restroom, closet, or similar space subject to being locked? (1910.37(f)) and (NFPA 101, Article 5-5.2.1))	X		
5 Are horizontal sliding or ventical doors used as exits in lieu of side hinged swinging doors secured in the full open position when the area is occupied? (NFPA 101, Article 5-2.1.4.1)	X		
6. Are doors from a room to an exit, or to a way of exit access, of the side-hinged, swinging type? Does the door swing in the direction of exit travel for rooms with more that 50 occupants? (1910.37(f)(2))	X		
7 Is the minimum width of any way of exit access no less than 28 inches? (1910.37(f)(6))		X	
8 Are all exits that are not readily visible marked by a readily visible exit sign? (1910.37(q)(1)(4)(6)(8))		X	

COMMENTS:

Item	Location:	RAC:	Comment:
3	Hall	3	Sliding bolt must be thrown. Folding chairs and Rock salt containers are placed to impede egress.
7	Latrine	3	Entrance way in latrine is limited to 21.5" in width.
8	Hall	4	Bulb burned out sign in S. Hall 1st floor and N. Hall 1st Floor. Assy Hall bulb burned out.

ACTIVITY/AREA: HOUSEKEEPING

INSPECTOR: SFC James P. Newcomer DATE: 23 Apr 97

NOTE: All "NO" answers require a comment in the comment section.

ITEM	YES	NO	NA
1. Are guards or handrails available for stairways having more than four risers? (NOTE: Check standard for number of handrails required) (1910.23(d)(1)(iii))	X		
2. Do the steps have a slip-resistant material, or is the present material functional? (1910.24(f))	X		
3. Does the upstairs storage area have the maximum weight capacity sign posted? (1910.22(d)(1))		X	
4. Are the outlets for nonpotable water (e.g. industrial or firefighting purposes) posted or otherwise marked in a manner that will clearly indicate the water is unsafe and not to be used for drinking or washing of the person? (1910.141(b)(2)(i))	X		
5. Have all cracked windows /and or leaking roof(s) (if there were any) been fixed so that no water is allowed into the building to create a slipping hazard? (1910.22(a)(2))	X		
6. Are upstairs storage areas equiped with railings and toe boards? They must have railings on all sides except those with ladders/stairs, etc. (1910.23(c)(1))			X
7. Are covers and/or guardrails provided to protect personnel from the hazards of open pits, tanks, vats, ditches, etc? (1910.22(c))		X	
8. Is every stairway floor opening guarded by a standard railing on all exposed sides (except at entrance to stairway)? (1910.23(a)(1) and (e)(1))	X		

COMMENTS:

Item	Location:	RAC	Comment:
7	Bolier	3	Coal pit entrance not guarded

ACTIVITY/AREA: HOUSEKEEPING

INSPECTOR: SFC James P. Newcomer DATE: 23 APR 97

NOTE: All "NO" answers require a comment in the comment section.

ITEM	YES	NO	NA
9. Is every floor hole into which persons can accidentally walk, guarded with a standard guard railing and with a standard toe board? (1910.23(c)(1))		X	
10. Do fixed stairways have a minimum width of 22 inches? And are all treads reasonably slip-resistant and is the rise height and tread width uniform throughout any flight of stairs? (1910.24(d) and (f))	X		

COMMENTS:

Item	Location:	RAC:	Comment:
9	Boiler Rm	3	Coal storage room does not have any guarding.

ACTIVITY/AREA: LADDERS

INSPECTOR: SFC James P. Newcomer DATE: 23 Apr 97

Note: All "NO" answers require a comment in the comment section.

ITEM	YES	NO	NA
1. Are ladder stands and work platforms capable of supporting at least four times the design work load? (1910.29(a)(2)(iii))	X		
2. Is the standard (work platform) (4 inch nominal) toe-board installed for work levels 10 feet or higher above the ground or floor? (1910.29(a)(3)(vi))			X
3. For work levels (work platforms) 10 feet or higher above the ground or floor is a guardrail of 2 x 4 inch nominal, or the equivalent, installed no less than 36 inches or more than 42 inches high (with a mid-rail when required)? (1910.29(a)(3)(vii))			X
4. Are wheel/casters (work platforms) provided with a positive wheel and/or swivel lock to prevent movement? (1910.29(a)(4))			X

COMMENTS:

Item	Location:	Comment:

ACTIVITY/AREA: SHOP AREA and MOTORPOOL SAFETY

INSPECTOR: SFC James P. Newcomer DATE: 23 Apr 97

Note: All "NO" answers require a comment in the comment section.

ITEM	YES	NO	NA
1. Are crane hooks removed from service when throat openings exceed more than 15 percent of normal or hook shows more than a 10 degree twist from the plane of the unbent hook or shows signs of cracks? (1910.179(1)(3)(ii)(a))	X		
2. Do hooks have safety closure latches properly positioned and functional? (TB 43-0142, APP A-1(5))			X
3. Are hoists, chains, slings and hooks marked to indicate the item identification number, load rating and next periodic inspection date? (TB 43-0142, Para 6(f)(2))			X
4. Are lifts/hoist that have an hydraulic fluid leak repaired and or replaced, depending upon the problem? (TB 43-0142, APP E-1 d.)			X
5. Has the crane been load tested? (TB 43-0142, Para 6(f)(2)			X
6. Are permanent aisles and passageways appropriately marked? (1910.176(a))		X	
7. Has electrical equipment (i.e. generators) grounding been accomplished and is there documentation of an initial ohms testing utilizing a multimeter (0-5 volt reading)? (TC 11-6, FM 10-69, and FM 10-68)			X
8. Is local exhaust provided in work areas were grinding/drilling machines are used for maintenance of asbestos parts/assemblies? (1910.1001)			X
9. Does the facility have a serviceable tire cage? (1910.177)	X		
10. Does the facility utilize an air hose with a clip on chuck and air line valve with a pressure gauge or a preset regulator of sufficient length to allow employee(s) to stand outside the trajectory? (TM 9-2610-200-20, para 2-19(5))			X

Item	Location:	RAC:	Comment:
6	Motor Pool	4	No aisleways are painted.

ACTIVITY/AREA: SHOP AREA and MOTORPOOL SAFETY

INSPECTOR: SFC James P. Newcomer DATE: 23 Apr 97

Note: All "NO" answers require a comment in the comment section.

ITEM	YES	NO	NA
1. Are crane hooks removed from service when throat openings exceed more than 15 percent of normal or hook shows more than a 10 degree twist from the plane of the unbent hook or shows signs of cracks? (1910.179(l)(3)(ii)(a))	X		
2. Do hooks have safety closure latches properly positioned and functional? (TB 43-0142, APP A-1(5))			X
3. Are hoists, chains, slings and hooks marked to indicate the item identification number, load rating and next periodic inspection date? (TB 43-0142, Para 6(f)(2))			X
4. Are lifts/hoist that have an hydraulic fluid leak repaired and or replaced, depending upon the problem? (TB 43-0142, APP E-1 d.)			X
5. Has the crane been load tested? (TB 43-0142, Para 6(f)(2)			X
6. Are permanent aisles and passageways appropriately marked? (1910.176(a))		X	
7. Has electrical equipment (i.e. generators) grounding been accomplished and is there documentation of an initial ohms testing utilizing a multimeter (0-5 volt reading)? (TC 11-6, FM 10-69, and FM 10-68)			X
8. Is local exhaust provided in work areas were grinding/drilling machines are used for maintenance of asbestos parts/assemblies? (1910.1001)			X
9. Does the facility have a serviceable tire cage? (1910.177)	X		
10. Does the facility utilize an air hose with a clip on chuck and air line valve with a pressure gauge or a preset regulator of sufficient length to allow employee(s) to stand outside the trajectory? (TM 9-2610-200-20, para 2-19(5))			X

Item	Location:	RAC:	Comment:
6	Motor Pool	4	No aisleways are painted.

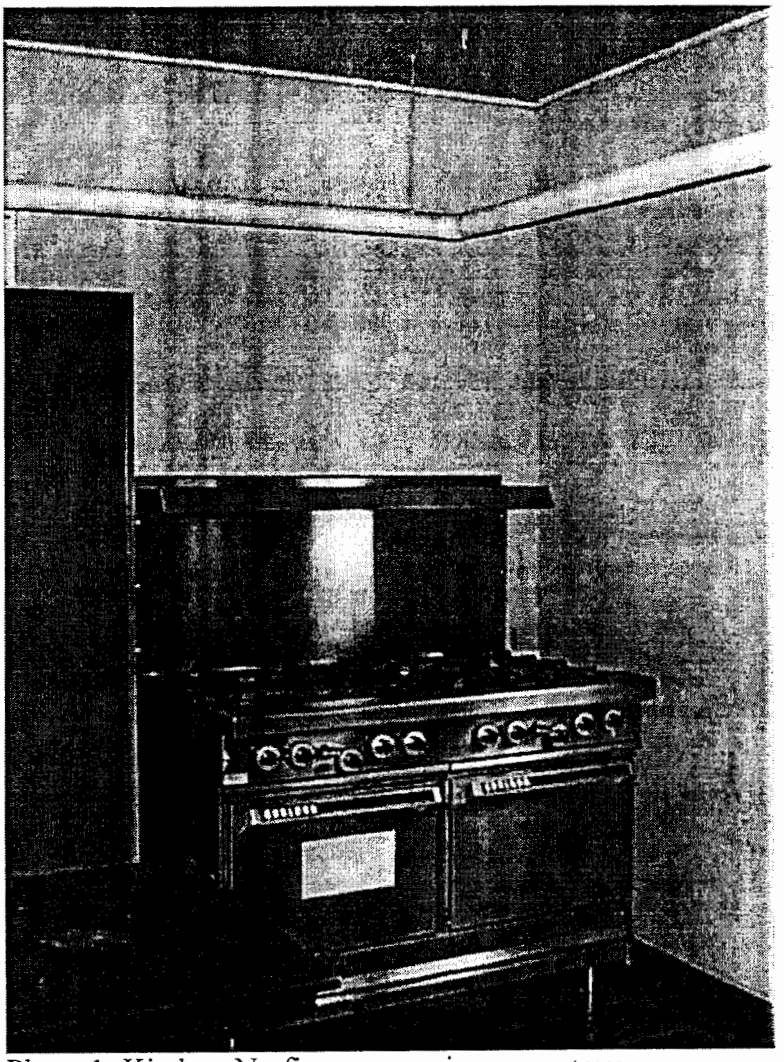

Photo 1: Kitchen-No fire suppression over stove

Photo 2: No litghting in new parking area

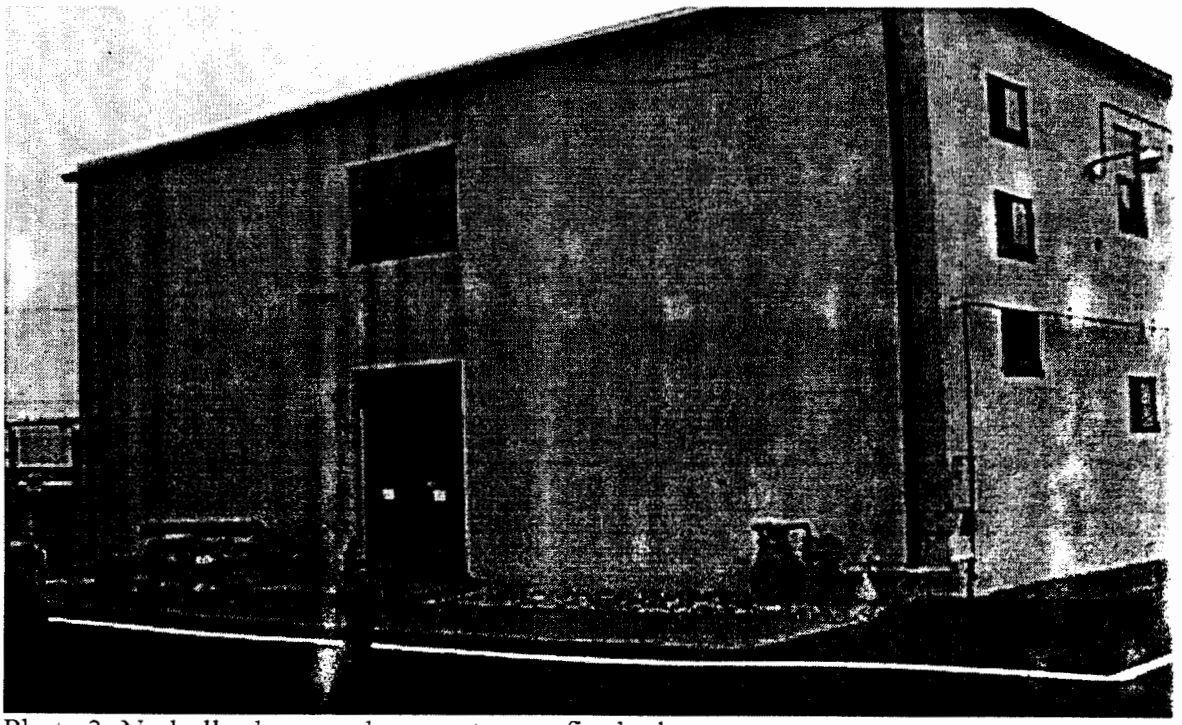

Photo 3: No bollards around gas meter nor fire hydrant

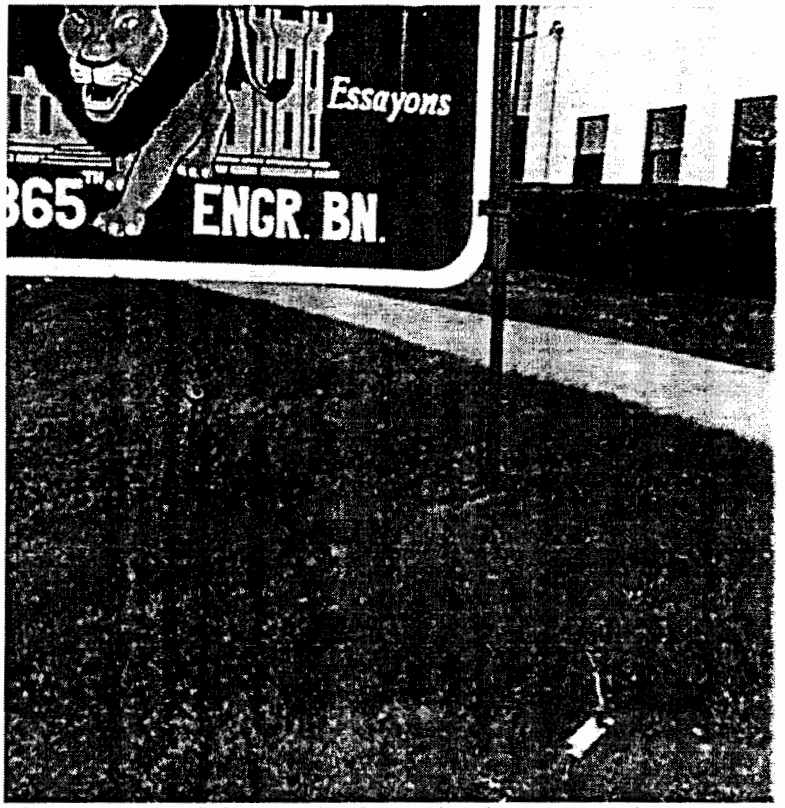

Photo 4: Spot lights on the front sign has exposed electrical wires.

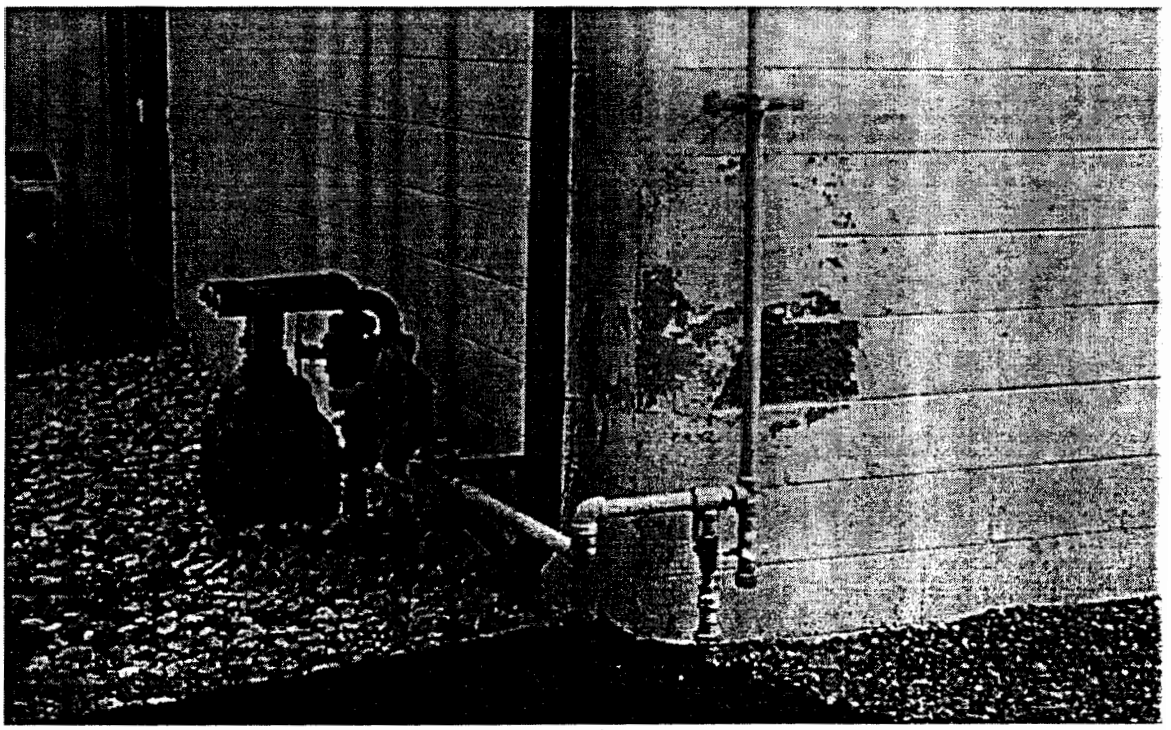

Photo 5: No protection around gas main and piping

ENCLOSURE 4
ENVIRONMENTAL COMPLIANCE ASSESSMENT

TABLE 1-1
SUMMARY OF FINDINGS

'TALLATION: WILKES-BARRE USARC Fiscal Year: 1997
D: PA-2104PA099

SECTION NO.	TITLE	REGULATORY I	REGULATORY II	REGULATORY HS	MANAGEMENT POS	MANAGEMENT III	MANAGEMENT HS	TOTAL
A	Air Emissions	0	0	0	0	0	0	0
C	Cultural Resources	0	0	0	0	0	0	0
HM	Hazardous Materials	0	0	3	0	2	0	5
HW	Hazardous Waste	0	0	0	0	0	0	0
NR	Natural Resource	0	0	0	0	0	0	0
O1	Environmental Impacts	0	0	0	0	0	0	0
O2	Environmental Noise	0	0	0	0	0	0	0
O3	IRP	0	0	0	0	0	0	0
O4	Pollution Prevention	0	0	0	0	1	0	1
O5	Program Management	0	0	0	1	0	0	1
PM	Pesticide	0	0	0	0	0	0	0
PO	POL	0	0	0	0	0	0	0
SO	Solid Waste	0	0	0	0	1	0	1
ST	Storage Tanks	0	0	0	0	0	0	0
T1	PCB	0	0	0	0	0	0	0
T2	Asbestos	0	0	0	0	0	0	0
T3	Radon	0	0	0	0	0	0	0
T4	Lead Based Paint	0	0	0	0	0	0	0
	Wastewater	0	0	0	0	0	0	0
	Water Quality	1	0	0	0	0	0	1
	TOTALS	1	0	3	1	4	0	9

Data File Name Prefix: C:\ECAS\FY97
Date Summary Report Produced: 04/25/97

HM.2.1.A #1 III ARMY/DOD FINDING Hazardous Materials

FINDING ID: HM-002-01A
MANUAL QUESTION NUMBER: HM-002-001-A
FINDING CATEGORY: CLASS III
FINDING TYPE: Negative EXISTING NOV: NO
LOCATION: FACILITY WIDE
IFS FACILITY NUMBER: INST
FACILITY TYPE: USARC(MB) - U.S. ARMY RESERVE CENTER - MAIN BLDG

FINDING DESCRIPTION: The facility has excess hazardous materials which have an expired shelf life, dented or rusted containers or are no longer being used. The HSD Supply Room, Room 114 has 2 cases of insect repellent and a can of deicing/defroster spray; Room 117 has 3 cans of insect repellent; the OMS has many spray paint, paint and lubricant cans which are old, dented and rusted in the flammable/combustible storage container. The storage container in the OMS also has coating compound ammunition and cartritge engine starting cylinders which are no longer being used.

CRITERIA: Installations should evaluate their operations/activities to identify and initiate opportunities for pollution prevention (MP) [July 1996].

FINDING COMMENTS:

SUGGESTED/ALTERNATIVE CORRECTIVE ACTION(S): Identify excess materials for disposal and submit disposal forms through DRMO Tobyhanna Army Depot.

STATUS OF CORRECTION:

********** INSTALLATION'S RESPONSE: **********

1) CORRECTIVE ACTION (CA) SELECTED:_____

_____

_____

_____

2) CURRENT STATUS OF THE CA:_____
3) ARE ADDED DETAILS OR COST DATA NEEDED TO DESCRIBE THIS CA?: Y__ N__
EXPLAIN:_____

_____

_____

4) ESTIMATED COMPLETION DATE FOR CA:_____
5) REVIEWER'S REMARKS:_____

_____

_____

_____

NAME/OFFICE/PHONE:_____ DATE:_____

FINDING ID: HM-035-001
MANUAL QUESTION NUMBER: HM-035-001
FINDING CATEGORY: CLASS III
FINDING TYPE: Negative EXISTING NOV: NO
LOCATION: FACILITY WIDE
IFS FACILITY NUMBER: INST
FACILITY TYPE: USARC(MB) - U.S. ARMY RESERVE CENTER - MAIN BLDG

FINDING DESCRIPTION: Flammable/combustible materials are being stored improperly in the USAR Center Room 118, Mess Section Storage - 5 lanterns w/fuel laying on side and 1 gallon can of fuel; Room 114, HSD Supply - spray paint, tent patch adhesive and rifle bore cleaner; Room 115 - 2 lanterns w/fuel and 1 gallon can of fuel; Room 105, Utility Room - 2-1 gallon cans of turpentine and 1-1 gallon can of paint thinner.

CRITERIA: Storage cabinets used for the storage of flammable/combustible liquids should meet specific requirements (MP) [May 1996].

FINDING COMMENTS: There are numerous yellow flammable/combustible storage cabinets designed for this purpose throughout the facility. The facility could transfer excess flammable/combustible storage cabinets to other facilities which require them.

SUGGESTED/ALTERNATIVE CORRECTIVE ACTION(S): Store all flammable/combustible materials within the existing yellow flammable/combustible storage cabinets.

STATUS OF CORRECTION:

********** INSTALLATION'S RESPONSE: **********

1) CORRECTIVE ACTION (CA) SELECTED:_____

_____

_____

_____

2) CURRENT STATUS OF THE CA:_____
3) ARE ADDED DETAILS OR COST DATA NEEDED TO DESCRIBE THIS CA?: Y__ N__
EXPLAIN:_____

_____

_____

4) ESTIMATED COMPLETION DATE FOR CA:_____
5) REVIEWER'S REMARKS:_____

_____

_____

_____

NAME/OFFICE/PHONE:_____ DATE:_____

FINDING ID: HM-001-002
MANUAL QUESTION NUMBER: HM-001-002
FINDING CATEGORY: HEALTH/SAFETY
FINDING TYPE: Negative EXISTING NOV: NO
LOCATION: FACILITY WIDE
IFS FACILITY NUMBER: INST
FACILITY TYPE: USARC(MB) - U.S. ARMY RESERVE CENTER - MAIN BLDG

FINDING DESCRIPTION: MSDS's are not available for all hazardous materials that are stored or used at the facility.

CRITERIA: Installations/CW facilities are required to have on file an MSDS for each hazardous chemical stored and used at the installation/CW facility (29 CFR 1910.1200(b)(3)(ii), 1910.1200(b)(4)(ii), 1910.1200(b)(6), 1910.1200(g)(1), and 1910.1200(g)(8)).

FINDING COMMENTS:

SUGGESTED/ALTERNATIVE CORRECTIVE ACTION(S): Obtain copies of MSDS for all hazardous materials stored or used and ensure that MSDS's are provided when hazardous materials are procured. MSDS's are available through the DPW-E upon request.

STATUS OF CORRECTION:

********** INSTALLATION'S RESPONSE: **********

1) CORRECTIVE ACTION (CA) SELECTED:_____

2) CURRENT STATUS OF THE CA:_____
3) ARE ADDED DETAILS OR COST DATA NEEDED TO DESCRIBE THIS CA?: Y__ N__
EXPLAIN:_____

4) ESTIMATED COMPLETION DATE FOR CA:_____
5) REVIEWER'S REMARKS:_____

NAME/OFFICE/PHONE:_____ DATE:_____

FINDING ID: HM-010-001
MANUAL QUESTION NUMBER: HM-010-001
FINDING CATEGORY: HEALTH/SAFETY
FINDING TYPE: Negative EXISTING NOV: NO
LOCATION: FACILITY WIDE
IFS FACILITY NUMBER: INST
FACILITY TYPE: USARC(MB) - U.S. ARMY RESERVE CENTER - MAIN BLDG

FINDING DESCRIPTION: The facility does not have a written Hazardous Comunications Program.

CRITERIA: Installations/CW facilities are required to have a written hazard communication program that is designed to provide all employees with information about the hazardous chemicals to which they are exposed (29 CFR 1910.1200(b)(1) and 1910.1200(e)(1)) [February 1995].

FINDING COMMENTS:

SUGGESTED/ALTERNATIVE CORRECTIVE ACTION(S): The 99th RSC should provide a generic Hazardous Communications Program and the facility should fill in the site specific information and attach a copy of a current inventory of all hazardous chemicals used at the facility.

STATUS OF CORRECTION:

********** INSTALLATION'S RESPONSE: **********

1) CORRECTIVE ACTION (CA) SELECTED:_____

2) CURRENT STATUS OF THE CA:_____
3) ARE ADDED DETAILS OR COST DATA NEEDED TO DESCRIBE THIS CA?: Y__ N__
EXPLAIN:_____

4) ESTIMATED COMPLETION DATE FOR CA:_____
5) REVIEWER'S REMARKS:_____

NAME/OFFICE/PHONE:_____ DATE:_____

FINDING ID: HM-010-002
MANUAL QUESTION NUMBER: HM-010-002
FINDING CATEGORY: HEALTH/SAFETY
FINDING TYPE: Negative EXISTING NOV: NO
LOCATION: FACILITY WIDE
IFS FACILITY NUMBER: INST
FACILITY TYPE: USARC(MB) - U.S. ARMY RESERVE CENTER - MAIN BLDG

FINDING DESCRIPTION: The facility has not conducted Hazardous Communications training for all personel who handle hazardous materials.

CRITERIA: Personnel working with hazardous materials are required to be trained in their use and the potential hazards of such materials (29 CFR 1910.1200(b)(3)(iii), 1910.1200(b)(4)(iii), 1910.1200(b)(6), and 1910.1200(h)).

FINDING COMMENTS:

SUGGESTED/ALTERNATIVE CORRECTIVE ACTION(S): A Hazardous Communications Training Program needs to be established and personnel which require the training trained. There is a DOD Federal Hazardous Communications Training Program, DOD 6050.5-W Student Workbook and Trainers Guide with a video tape available for this training.

STATUS OF CORRECTION:

********** INSTALLATION'S RESPONSE: **********

1) CORRECTIVE ACTION (CA) SELECTED:_____
_____
_____
_____
2) CURRENT STATUS OF THE CA:_____
3) ARE ADDED DETAILS OR COST DATA NEEDED TO DESCRIBE THIS CA?: Y__ N__
EXPLAIN:_____
_____
_____
4) ESTIMATED COMPLETION DATE FOR CA:_____
5) REVIEWER'S REMARKS:_____
_____
_____
_____

NAME/OFFICE/PHONE:_____ DATE:_____

FINDING ID: O4-001-04R
MANUAL QUESTION NUMBER: O4-001-004-R
FINDING CATEGORY: CLASS III
FINDING TYPE: Negative EXISTING NOV: NO
LOCATION: FACILITY WIDE
IFS FACILITY NUMBER: INST
FACILITY TYPE: USARC(MB) - U.S. ARMY RESERVE CENTER - MAIN BLDG

FINDING DESCRIPTION: The facility does not have a written Pollution Prevention Plan.

CRITERIA: An facility's written pollution plan is required to state how the facility will contribute to the DA's 50 percent reduction goal (HQDA LTR 200-94-1, para 6d)

FINDING COMMENTS: The US Army Reseve Command should address the lack of Pollution Prevention (P2) Plans by conducting programtic pollution prevention opportunity assessments at typical USAR Centers and develop genteric P2 Plans for USAR Centers.

SUGGESTED/ALTERNATIVE CORRECTIVE ACTION(S): The 99th RSC should develop a programatic Pollution Prevention Plan and the facility should add site specific information.

STATUS OF CORRECTION:

********** INSTALLATION'S RESPONSE: **********

1) CORRECTIVE ACTION (CA) SELECTED:_____
_____
_____
_____
2) CURRENT STATUS OF THE CA:_____
3) ARE ADDED DETAILS OR COST DATA NEEDED TO DESCRIBE THIS CA?: Y__ N__
EXPLAIN:_____
_____
_____
4) ESTIMATED COMPLETION DATE FOR CA:_____
5) REVIEWER'S REMARKS:_____
_____
_____
_____

NAME/OFFICE/PHONE:_____ DATE:_____

05.5.2.R #1 POSITIVE ARMY/DOD FINDING Program Management

FINDING ID: 05-005-02R
MANUAL QUESTION NUMBER: 05-005-002-R
FINDING CATEGORY: POSITIVE
FINDING TYPE: Positive EXISTING NOV: NO
LOCATION: FACILITY WIDE
IFS FACILITY NUMBER: INST
FACILITY TYPE: USARC(MB) - U.S. ARMY RESERVE CENTER - MAIN BLDG

FINDING DESCRIPTION: The facility had a copy of an Internal Environmental Compliance Assessment Report with environmental documentation prepared by the 79th ARCOM Engineers Office. This document was very comprehesive and addressed many of the findings from the last External Environmental Assessment.

CRITERIA: Environmental compliance assessments will be undertaken in accordance with Army regulation (AR 200-1, para 12-8).

FINDING COMMENTS: This excellent document could be used to maintain future compliance documents as well.

SUGGESTED/ALTERNATIVE CORRECTIVE ACTION(S): The Environmental Standard Operating Procedures contained in the document should be updated and approved by the 99th RSC. After republication of the document it should be distributed Throughout the 99th RSC.

STATUS OF CORRECTION:

********** INSTALLATION'S RESPONSE: **********

1) CORRECTIVE ACTION (CA) SELECTED:_____

_____

_____

_____

2) CURRENT STATUS OF THE CA:_____

3) ARE ADDED DETAILS OR COST DATA NEEDED TO DESCRIBE THIS CA?: Y__ N__

EXPLAIN:_____

_____

_____

4) ESTIMATED COMPLETION DATE FOR CA:_____

5) REVIEWER'S REMARKS:_____

_____

_____

_____

NAME/OFFICE/PHONE:_____ DATE:_____

SO.25.1.R #1 III ARMY/DOD FINDING Solid Waste

FINDING ID: SO-025-01R
MANUAL QUESTION NUMBER: SO-025-001-R
FINDING CATEGORY: CLASS III
FINDING TYPE: Negative EXISTING NOV: NO
LOCATION: FACILITY WIDE
IFS FACILITY NUMBER: INST
FACILITY TYPE: USARC(MB) - U.S. ARMY RESERVE CENTER - MAIN BLDG

FINDING DESCRIPTION: Plains Township requires commercial establishments to develop a program to seperate all of the materials designated which include high grade office paper, steel, bi-metal, aluminum cans, all plastic bottles with recycling label, glass and newspaper. The facility can be more proactive in thier particpation in the local recycling program.

CRITERIA: Reserve facilities are required to participate in any state or local recycling programs and to reduce the volume of solid waste materials at the source whenever practical (DOD 4165.60, para V(a), V(c), and V(h), and AR 200-1, para 6-14a).

FINDING COMMENTS: The facility has obtained recycling containers but they are not being used for there intended purpose.

SUGGESTED/ALTERNATIVE CORRECTIVE ACTION(S): The facility management should take a more proactive approach to participating in the local recycling program. Assign responsibility for the recycling program and ensure that recyling containers are placed where materials are used and enforce the use of the containers. Periodically check trash cans and dumpsters for materials which should be recycled and continue to encourage participation when recyclables are found in the refuse.

STATUS OF CORRECTION:

********** INSTALLATION'S RESPONSE: **********

1) CORRECTIVE ACTION (CA) SELECTED:_____

_____

_____

_____

2) CURRENT STATUS OF THE CA:_____
3) ARE ADDED DETAILS OR COST DATA NEEDED TO DESCRIBE THIS CA?: Y__ N__
EXPLAIN:_____

_____

_____

4) ESTIMATED COMPLETION DATE FOR CA:_____
5) REVIEWER'S REMARKS:_____

_____

_____

_____

NAME/OFFICE/PHONE:_____ DATE:_____

WQ.3.1 #1 I STATE FINDING Water Quality

FINDING ID: WQ-003-001
MANUAL QUESTION NUMBER: WQ-003-001
FINDING CATEGORY: CLASS I
FINDING TYPE: Negative EXISTING NOV: NO
LOCATION: BOILER ROOM
IFS FACILITY NUMBER: INST
FACILITY TYPE: USARC(MB) - U.S. ARMY RESERVE CENTER - MAIN BLDG

FINDING DESCRIPTION: There is no backflow preventer on the facility fire hose system. The water in the lavatories and sinks has a yelowish tint which may be caused by backflow from the fire hose system.

CRITERIA: Installations/CW facilities are required to comply with state and local water quality regulations (EO 12088, Section 1-1 and 42 USC 300h-7(h)).

FINDING COMMENTS:

SUGGESTED/ALTERNATIVE CORRECTIVE ACTION(S): Install a backflow preventor on the fire hose system or have it caped and abandoned. If the fire hose system is abandoned an alternate fire supression system will have to be implmented.

STATUS OF CORRECTION:

********** INSTALLATION'S RESPONSE: **********

1) CORRECTIVE ACTION (CA) SELECTED:_____

_____

_____

_____

2) CURRENT STATUS OF THE CA:_____
3) ARE ADDED DETAILS OR COST DATA NEEDED TO DESCRIBE THIS CA?: Y__ N__
EXPLAIN:_____

_____

_____

4) ESTIMATED COMPLETION DATE FOR CA:_____
5) REVIEWER'S REMARKS:_____

_____

_____

_____

NAME/OFFICE/PHONE:_____ DATE:_____

ENCLOSURE 5
ARMS VAULT FACILITY STRUCTURAL CERTIFICATION

INSPECTION
ARMS ROOM CHECK LIST

FACILITY: Wilkes-Barre U.S. Army Reserve Center
Highway 315 and 115
Wilkes-Barre, PA

POINT OF CONTACT: Mr. Henry

A. FLOORS:	Yes	No
1. 6 inch thick concrete slab on grade reinforced with wire mesh.	X	
2. 6-inch thick concrete slab reinforced with steel bars (Floor forms the ceiling of underlying room or area).	N/A	
3. 2-inch concrete topping over existing floor slab.	N/A	
4. Existing slabs removed and replaced with new 6-inches of reinforced concrete.	N/A	
B. WALLS:		
1. 8-inch concrete reinforced with No. 4 bars at 9 inches on center in each direction.	N/A	
2. 8-inch concrete masonry with No. 4 bars threaded through masonry units cavities at 8 inch centers. Cells of masonry filled with mortar or concrete.	N/A	
3. 8 inches of brick interlocked between inner and outer courses.	N/A	
4. Existing walls: New 8 inch reinforced (inner) (outer) walls constructed against existing walls.	N/A	
5. Other: 8 inch masonary block reinforced with 3/16 expanded metal	X	
C. CEILING:		
1. 8 inch concrete slab reinforced with No. 4 bars minimum, and forming a grid where the area of any opening does not exceed 96 square inches.	N/A	
2. Concrete Pan Joists: Thinnest portion of the joist not less than 6 inches and the clear space between joist does not exceed 20 inches	N/A	
3. 3/16 expanded metal welded to 4 inch steel beams 20 inches OC.	X	

`. DOORS: (Barracks and other Full-Time occupied spaces)

1. Two doors provided to arms vault. Each door 1-3/4 inch thick solid core wood with 12 gauge metal plate securely attached to the outside face.	N/A	__
2. Two doors provided to arms vault. Each door 1-3/4 inch thick industrial type internally reinforced vertically with continuous steel stiffeners spaced 6 inches on center. Minimum thickness or skin of doors is not less than 14 gauge.	N/A	__
3. Two doors provided to arms vault. One door as described in D1 or D2 above. The second door, rod and bar grid door as required in AR 190-11.	N/A	__

E. DOORS: (Reserve Centers)

1. One Class 5 steel vault door (Fed. Spec. AA-D-600B) with a built in three position dail-type changeable combination lock used in lieu of door described above.	X	__
2. Day gate provided but not required.	N/A	__

F. ARMS PASS WINDOW DOORS:

Pass window provided with doors as required for entrance to Arms Vault.	N/A	__

G. DOORS AND PASS WINDOW FRAMES:

Frames are compatible with doors and frames and securely anchored.	N/A	__

HARDWARE FOR DOORS:

1. Locking device for the outer door to vault is high security hasp conforming to military specification MIL-P-43607.	N/A	__
2. The inner door to the arms vault has mortise cylinder deadbolt lock "ultra 700" with Medelo or Emhart high security cylinder.	N/A	__
3. Door hinges are (fixed-Pin security type) (safety-stud hinges) (with hinge pins welded) to prevent removal.	N/A	__
4. Hinge mounting screws not exposed to the outside of the arms rooms.	N/A	__

I. OPENINGS: (Walls or Ceilings)

1. No opening required in walls or ceilings.	X	__
2. All openings greater than 96 square inches protected by rod-and bar grid as required in paragraph E-5 or AR 190-11.	___	__

J. ARMS ROOM ANCHOR RINGS:

Anchor rings provided at arms room walls to secure arms racks.	X	__

K. SECURITY LIGHTING:

Interior entrances of arms rooms illuminated a minimum of .1 foot-candle at any point with in 20 foot radius of the entrance.	X	

L. INTRUSION DETECTION SYSTEM: (IDS)

1. Intrusion alarm detection system provided for vaults as required in AR 190-11.	X	
2. Alarms at local law enforcement	X	
3. Other: IDS has motion sensors	X	

M. MECHANICAL:

1. Electrical dehumidifier provided for vault temperature control.	X	
2. 3-inch floor drain provided for dehumidifier.		X

N. SECURITY PATROLS:

Reserve center is checked by security patrol periodically.	X	

O. BOLTS:

If facility is not located on a military installation bolts of weapons shall be removed and secured separately.	X	

P. WAIVERS, UNUSUAL REQUIREMENTS AND ADDITIONAL FEATURES: | | X

Q. SUMMARY:

This facility meets Class II storage requirements for weapons.	X	

CERTIFICATION OF COMPLIANCE WITH CRITERIA SET FORTH AR 190-11

Todd D. Griffith, Major CE PE
Mechanical Engineer
416th ENCOM

23 April 1997

MEMORANDUM

June 5, 1997

From: Frank Nolan, Fort Dix Environmental Division
To: LTC Olson, 99th RSC

Subj: Updated Environmental Report for the Comprehensive Facility Assessment of Wilkes Barre USARC

1. Recently, Fort Dix submitted to you a Comprehensive Facility Assessment (CFA) Report for the Wilkes Barre, Pennsylvania USARC. In the environmental section, the Reserve Center was mistakenly identified as the Oliver O. Howard USARC.

2. Enclosed is a revised environmental report with the correct facility name. Please replace the entire environmental section with this updated environmental report. I apoligize for the error and appreciate you updating the report for me.

3. For additional information, I can be reached at (609) 562-3536/3050.

'97 JUN 10 A8:50
DCSEH

ENVIRONMENTAL

COMPLIANCE

ASSESSMENT

Wilkes Barre USARC
Wilkes Barre, Pennsylvania

CFA - Environmental Report

Facility Name: Wilkes Barre USARC
Wilkes Barre, PA

Inspection Date: 12 May 1997

INSPECTION LIST	Yes / No / NA	COMMENTS
Air Emissions Management		
1. Is the facility in an air quality non-attainment region? (Non-attainment regions are large metropolitan areas that are polluted and do not meet the EPA standards) if yes, list pollutants and degree of non-attainment.	Yes	Severe non-attainment Ozone
2. Does the facility dispense any fuel?	No	
3. What type of fuel does it dispense? Diesel? Unleaded gasoline?	NA	
4. Is fuel point permanent or vehicle mounted?	NA	
5. Does the unit or facility use bulk CFC's or halon?	No	
6. Is the facility in the process of eliminating all Class 1 Ozone Depleting Chemicals (ODC's)?	Yes	
7. Does the facility have required air emission permits to construct, operate, or modify stationary sources?	NA	
8. Is the facility required to submit annual air emission statements?	No	
9. Are there any painting operations at the facility other than spot painting & facility maintenance?	No	
10. Is any open air burning conducted at the facility?	No	
Cultural Resources Management		
1. Does the facility have any sites on the National Register of Historic Sites?	No	
2. Is there any evidence of archeological resources at the facility?	No	
3. Does the facility have any graves or artifacts?	No	
4. Is there any evidence of 50 year or older architectural resources at the facility?	No	
5. Does the facility have a Cultural Resources Management Plan?	No	
Hazardous Materials Management		
1. Does the facility have a master listing of hazardous substances used or stored at the facility?	No	
2. Does each hazardous substance procured or stored at the facility have a Material Safety Data Sheet (MSDS)?	No	
3. Is the facility in compliance with EPCRA Regulations?	No	
4. Does the facility have an Emergency Response Coordinator?	Yes	
5. Is there an indoor flammable/combustible storage area?	Yes	Flammable lockers
6. Does the facility use bulk acids?	No	

CFA - Environmental Report (Cont)

INSPECTION LIST	Yes / No / NA	COMMENTS
7. Does the facility use compressed gas?	No	
8. Does the facility have a Pollution Prevention Plan (PPP)?	No	
Hazardous Waste Management		
1. Is the facility a generator of hazardous waste?	No	
2. Does the facility generate less than 100 kg [220.46 lb., approx. 28 gal.] of hazardous waste in 1 month?	No	
3. Does the facility generate more than 100 kg [220.46 lb., approx. 38 gal.] of hazardous waste in 1 month?	No	
4. Does the facility generate more than 1000 kg [2204.6 lb. Approx. 280 gal.] of hazardous waste in 1 month?	No	
5. Does the facility have a hazardous waste minimization program?	No	
6. Does the facility store an munitions or ordnance?	No	
7. Does the facility produce medical, dental or veterinary waste?	No	
8. Does the facility produce waste solvents?	No	
9. Does the facility have an EPA ID#?	No	
10. Does the facility have a Hazardous Waste management Plan?	No	
11. Does the facility store hazardous waste? How long?	No	
12. Does the facility have a Hazardous Waste Treatment, Storage, and Disposal Facility (TSDF)?	No	
13. Is Hazardous Waste stored properly (labeled, segregated, closed lids, etc.)?	NA	
14. Does the facility dispose of hazardous wastes? How and where?	No	
15. Are manifest completed for all Hazardous Waste shipments?	NA	
16. Are manifests kept on file for three years?	NA	
Natural Resources Management		
1. Has an endangered or threatened plant or animal survey been conducted at the site?	Yes	
2. Are there any endangered or threatened plant or animal species on or near the facility?	No	
3. Is soil erosion present at the facility?	Yes	Stormwater embankment area near OMS building
4. Are there problems at the facility with wildlife (deer, geese, groundhogs, etc.)?	No	
5. Is there disease/insect damage to plant life?	No	
6. Is there areas of known distressed (discolored or dead) vegetation?	No	

CFA - Environmental Report (Cont)

INSPECTION LIST	Yes / No / NA	COMMENTS
7. Are wetlands present at the facility?	No	
Pesticide Management		
1. Does the facility store, mix or prepare pesticides on site?	No	
2. Are pesticides applied by a Contractor?	No	
3. Are pesticides applied by in-house personnel?	No	
4. Are pesticides stored at the facility? Where?	No	
5. Does the facility have an Integrated Pest Management Plan? If no, is the facility included in another plan?	No	Facility not included in another plan
6. Is the pesticide contract reviewed/overseen by DOD certified personnel?	NA	
7. Does the facility keep records of pesticide application and storage?	NA	
Petroleum, Oil, and Lubricant (POL)		
1. Does the facility have a current (3 yr old or less) Spill Prevention Control and Countermeasure (SPCC) Plan?	NA	
2. Is the SPCC Plan exercised annually (mock spill events conducted)?	No	
3. Does the facility generate used oil? Where?	No	
4. How does the facility dispose of the waste oil?	NA	
Solid Waste Management		
1. Does the local community have a recycling program?	Yes	
2. Does the facility have a recycling program?	Yes	
3. Does the facility have a Solid Waste Management Plan?	No	
4. How does the facility dispose of trash & refuse?		Contractor
Storage Tank Management		
1. Does the facility have aboveground storage tanks used for the storage of petroleum products or hazardous waste?	No	
Location, Substance, Capacity.		
Location, Substance, Capacity.		
2. Does the facility have any aboveground storage tanks no longer in service?	No	
Location, Substance, Capacity.		
Location, Substance, Capacity.		
3. Does the facility have any underground storage tanks?	No	
Location, Substance, Capacity.		
Location, Substance, Capacity.		

CFA - Environmental Report (Cont)

INSPECTION LIST	Yes / No / NA	COMMENTS
4. Does the facility have any underground storage tanks no longer in service?	No	
Location, Substance, Capacity.		
Location, Substance, Capacity.		
5. Are all of the facility's UST's registered?	NA	
6. Do all of the tanks have leak detection, corrosion protection, or spill/overflow prevention?	NA	
Stormwater Management		
1. Does the facility have a NPDES Permit for site generated stormwater?	No	
2. Where does the facility stormwater discharge to?		Unknown
3. If subject to stormwater regulations, does the facility have a general, group, or individual permit?	NA	
4. Does the facility have a Stormwater Pollution Prevention Plan (SWPPP)?	No	
5. Are Best Management Practices (BMP's) being accomplished?	No	
Toxic Substances Management		
1. Has the facility conducted an evaluation of potential PCB equipment and established a PCB equipment inventory?	No	
2. Does the facility own any transformers, heat transfer or hydraulic systems containing PCB's?		A transformer survey is needed to determine this.
3. Is potential PCB equipment properly marked as ""PCB Contaminated" or "No PCB's"?	No	Utility company should inspect, test, and label transformers.
4. Has a facility wide asbestos survey been completed?	Yes	
5. Does the facility have a current and comprehensive Asbestos Management Plan?	No	
6. Have the maintenance personnel been trained in asbestos management?	No	
7. Does the facility remove brake drums during vehicle maintenance operations?	No	
8. Has the facility been tested for radon?	Yes	
Wastewater Management		
1. Is the facility required to submit permit applications or registration applications for wastewater discharges?	No	
2. Does the facility have an effluent discharge permit to a Publicly Owned Treatment Works (POTW)?	Yes	
3 Does the facility have wash rack? If yes, where does it drain to?	Yes	Wash rack not in use because oil/water separator does not exist.

CFA - Environmental Report (Cont)

INSPECTION LIST	Yes / No / NA	COMMENTS
4. Does the facility have an oil-water separator? If yes, where does it drain to?	No	
5. Does the facility have a photographic laboratory?	No	
6. Does a Wastewater Treatment Plant exist at the facility?	No	
7. Did a Wastewater Treatment Plant exist in the past?	No	
Water Quality Management		
1. What is the source of the drinking water at the facility?		Public Water
2. How often is the facility drinking water sampled and analyzed?		Unknown
Other Environmental Issues		
1. Are NEPA issues addressed at the facility?	No	
2. Have there ever been any complaints on noise produced by Army activities or operations at the facility?	No	
3. Has the facility conducted an Installation Compatible Use Zone (ICUZ) study?	Yes	USA CHPPM performed survey in 1994-1995. Noise levels were relatively low.
4. Are there any sites at the facility that may have been contaminated in the past?	No	
5. Has the facility been contacted by any outside agency regarding past contamination?	No	
6. Does the facility have a copy of AR200-1, AR200-2, and the State's Environmental Regulations?	No	
7. Have any other environmental assessments or inspections been conducted at the facility?	Yes	
8. Are the results of the inspection available?	Yes	
9. Does the facility have an active lead management program focusing on current training and certification?	No	
10. Does the facility have an indoor firing range?	No	
11. Has a lead study been conducted at the facility to determine high levels of lead in paint, firing ranges, etc.?	Yes	

CFA - Environmental Detail Summary

Facility Name: Wilkes Barre USARC	**Facility Location:** Wilkes Barre, PA	**Command:** 99th Regional Support
Work Order Number: U40140307P	**POC Name:** Mr. William Henry	**POC Phone #:** 717-824-3588
Category	**Findings**	**Work Needed**
Hazardous Material Management OMS Building	Damaged containers stored in flammable lockers in OMS Building.	- Inventory flammable lockers - Dispose of damaged/rusted containers - Dispose of containers no longer being used.

Recommendations:

The OMS Building flammable lockers contain many damaged and rusted containers of flammable liquids. An inventory of the flammable lockers should be accomplished and all containers that are damaged or no longer being used should be disposed of properly. Containers used to store flammable or combustible materials are required to meet specific standards (29 CFR 1910.106).

COST ESTIMATE ANALYSIS		INVITATION/ CONTRACTOR		EFFECTIVE PRICING DATE		DATE PREPARED:	
ESTIMATOR	Frank Nolan	CHECKED BY		DRAWING NO.		SHEET 1 OF 1 SHEETS	

TASK DESCRIPTION	UNITS	MEAS	COST	SI&Q*	Sub-Total	Admin OH @ 5%:	Total
N/A							
TOTALS THIS SHEET							

*Supervision, Inspection & Quality Assurance

For use of this form, se TM 5 800 w: the proponent agency is USACE

CFA - Environmental Detail Summary

Facility Name: Wilkes Barre USARC	**Facility Location:** Wilkes Barre, PA	**Command:** 99th Regional Support
Work Order Number: U40140307P	**POC Name:** Mr. William Henry	**POC Phone #:** 717-824-3588
Category	**Findings**	**Work Needed**
Hazardous Materials Management	Main Building - Storage Room #115 Improper storage of flammable liquids	- Inspect facility, store flammable liquids properly

Recommendations:

The Main Building Storage Room #115 contains a one (1) gallon can of fuel oil and two (2) gasoline lanterns stored on a shelf. These items should be removed from this area and stored properly in a flammable locker. Areas where flammable liquids are stored must meet certain fire protection standards (29 CFR 1910).

COST ESTIMATE ANALYSIS		INVITATION/ CONTRACTOR		EFFECTIVE PRICING DATE		DATE PREPARED:	
ESTIMATOR	Frank Nolan	CHECKED BY		DRAWING NO.		SHEET 1 OF 1 SHEETS	

TASK DESCRIPTION	UNITS	MEAS	COST	SI&Q*	Sub-Total	Admin OH @ 5%:	Total
N/A							
TOTALS THIS SHEET							

*Supervision, Inspection & Quality Assurance

For use of this form, se TM 5 800 w: the proponent agency is USACE

CFA - Environmental Detail Summary

Facility Name: Wilkes Barre USARC	**Facility Location:** Wilkes Barre, PA	**Command:** 99th Regional Support
Work Order Number: U40140307P	**POC Name:** Mr. William Henry	**POC Phone #:** 717-824-3588

Category	Findings	Work Needed
Hazardous Materials Management	Main Building - Janitorial Closet in Room #105 Improper storage of flammable liquids	- Inspect location, remove flammables, store them properly in flammable locker.

Recommendations:

The Main Building Room #105 janitorial closet contains flammable substances including paint thinner. These items should be removed from this area and stored properly in a flammable locker.

COST ESTIMATE ANALYSIS		INVITATION/ CONTRACTOR		EFFECTIVE PRICING DATE		DATE PREPARED:	
ESTIMATOR	Frank Nolan	CHECKED BY		DRAWING NO.		SHEET 1 OF 1 SHEETS	

TASK DESCRIPTION	UNITS	MEAS	COST	SI&Q*	Sub-Total	Admin OH @ 5%:	Total
N/A							
TOTALS THIS SHEET							

*Supervision, Inspection & Quality Assurance

For use of this form, se TM 5 800 w: the proponent agency is USACE

CFA - Environmental Detail Summary

Facility Name: Wilkes Barre USARC	**Facility Location:** Wilkes Barre, PA	**Command:** 99th Regional Support
Work Order Number: U40140307P	**POC Name:** Mr. William Henry	**POC Phone #:** 717-824-3588

Category	Findings	Work Needed
Toxic Substances Management Polychlorinated Biphenyl's (PCB's)	The Reserve Center has unmarked electrical transformers on-site, located on a pole outside the Main Building	Reserve Center should coordinate a transformer survey with the utility company to test and label transformers appropriately

Recommendations:

The Reserve Center and the power company should implement a PCB survey of the Reserve Center transformers. Each transformer containing 500 ppm or greater PCB's should be marked with an M_L marking (40 CFR 761.40 and 761.45). Transformers containing less than 500 ppm PCB's should also be marked approprietely.

COST ESTIMATE ANALYSIS		INVITATION/ CONTRACTOR		EFFECTIVE PRICING DATE		DATE PREPARED:	
ESTIMATOR	Frank Nolan	CHECKED BY		DRAWING NO.		SHEET 1 OF 1 SHEETS	

TASK DESCRIPTION	UNITS	MEAS	COST	SI&Q*	Sub-Total	Admin OH @ 5%:	Total
N/A							
TOTALS THIS SHEET							

*Supervision, Inspection & Quality Assurance

For use of this form, se TM 5 800 w: the proponent agency is USACE

CFA - Environmental Detail Summary

Facility Name: Wilkes Barre USARC	**Facility Location:** Wilkes Barre, PA	**Command:** 99th Regional Support
Work Order Number: U40140307P	**POC Name:** Mr. William Henry	**POC Phone #:** 717-824-3588

Category	Findings	Work Needed
Hazardous Materials Management	Main Building Storage Room #114 Improper storage of flammable liquids and hazardous substances	- Inventory storage room - Remove and properly store flammable liquids/hazardous substances - Train all personnel who work with hazardous materials

Recommendations:

The Main Building Storage Room #114 contains flammable liquids and hazardous substances. Areas where flammable liquids and hazardous substances are stored must meet specific guidelines (29 CFR 1919). All personnel who work with hazardous materials are required to be trained in the handling and storage of hazardous materials.

COST ESTIMATE ANALYSIS		INVITATION/ CONTRACTOR		EFFECTIVE PRICING DATE		DATE PREPARED:	
ESTIMATOR	Frank Nolan	CHECKED BY		DRAWING NO.		SHEET 1 OF 1 SHEETS	

TASK DESCRIPTION	UNITS	MEAS	COST	SI&Q*	Sub-Total	Admin OH @ 5%:	Total
N/A							
TOTALS THIS SHEET							

*Supervision, Inspection & Quality Assurance

For use of this form, se TM 5 800 w: the proponent agency is USACE

...ronmental Detail Summary

...kes Barre USARC	**Facility Location:** Wilkes Barre, PA	**Command:** 99th Regional Support
Work Order Number: U40140307P	**POC Name:** Mr. William Henry	**POC Phone #:** 717-824-3588
Category	**Findings**	**Work Needed**
Stormwater Management	Miscellaneous Stormwater Pollution Prevention Issues	- Inspect vehicles routinely - Keep spill kits/drip pans available - Relocate trash container

Recommendations:

Military vehicles parked in the parking lot are located next to a stormwater drainage area. The vehicles should be inspected routinely to ensure oil is not leaking from them and running-off into the stormwater. Drip-pans should be readily available in case a stormwater pollution problem is discovered. Also, a large trash container is currently located on the washpad which has a stormwater drain located in the center of the washpad. This trash container should be relocated to prevent leakage from entering the stormwater system.

COST ESTIMATE ANALYSIS		INVITATION/ CONTRACTOR		EFFECTIVE PRICING DATE		DATE PREPARED:	
ESTIMATOR	Frank Nolan	CHECKED BY		DRAWING NO.		SHEET 1 OF 1 SHEETS	

TASK DESCRIPTION	UNITS	MEAS	COST	SI&Q*	Sub-Total	Admin OH @ 5%:	Total
N/A							
TOTALS THIS SHEET							

*Supervision, Inspection & Quality Assurance

For use of this form, se TM 5 800 w: the proponent agency is USACE

CFA - Environmental Detail Summary

Facility Name: Wilkes Barre USARC	**Facility Location:** Wilkes Barre, PA	**Command:** 99th Regional Support
Work Order Number: U40140307P	**POC Name:** Mr. William Henry	**POC Phone #:** 717-824-3588
Category	**Findings**	**Work Needed**
Pollution Prevention	Installations/Facilities are required to develop a Pollution Prevention Plan (PPP) by 31 December 1995 (E012088)	Develop Pollution Prevention Plan

Recommendations:

The Reserve Center is required to prepare a Pollution Prevention Plan that outlines what the Reserve Center is going to do to support DoD's pollution reduction goals. Pollution prevention initiatives are required to be considered in all plans, work statements, and contract awards evaluating recyclability, waste prevention, reuse of product, and waste prevention.

COST ESTIMATE ANALYSIS		INVITATION/ CONTRACTOR		EFFECTIVE PRICING DATE		DATE PREPARED:	
ESTIMATOR	Frank Nolan	CHECKED BY		DRAWING NO.		SHEET 1 OF 1 SHEETS	

TASK DESCRIPTION	UNITS	MEAS	COST	SI&Q*	Sub-Total	Admin OH @ 5%:	Total
Develop Pollution Prevention Plan	1	Jb	15,000	1,500	16,500	825	17,325
TOTALS THIS SHEET							17,325

*Supervision, Inspection & Quality Assurance

For use of this form, se TM 5 800 w: the proponent agency is USACE

CFA - Environmental Detail Summary

Facility Name: Wilkes Barre USARC	**Facility Location:** Wilkes Barre, PA	**Command:** 99th Regional Support
Work Order Number: U40140307P	**POC Name:** Mr. William Henry	**POC Phone #:** 717-824-3588
Category	**Findings**	**Work Needed**
Wastewater Management OMS Building	Installation of an oil/water separator is required prior to activating the wash pad	Install oil/water separator

Recommendations:

The wash pad at the OMS Building is currently inactive because an oil/water separator must be installed prior to using the wash pad.

COST ESTIMATE ANALYSIS		INVITATION/ CONTRACTOR		EFFECTIVE PRICING DATE		DATE PREPARED:	
ESTIMATOR	Frank Nolan	CHECKED BY		DRAWING NO.		SHEET 1 OF 1 SHEETS	

TASK DESCRIPTION	UNITS	MEAS	COST	SI&Q*	Sub-Total	Admin OH @ 5%:	Total
Install Oil/Water Separator	1	Jb	40,000	4,000	44,000	2200	46,200
(Distance to Sanitary Sewer tie-in will effect cost estimate)							
TOTALS THIS SHEET							46,200

*Supervision, Inspection & Quality Assurance

For use of this form, se TM 5 800 w: the proponent agency is USACE

CFA - Environmental Detail Summary

Facility Name: Wilkes Barre USARC	**Facility Location:** Wilkes Barre, PA	**Command:** 99th Regional Support
Work Order Number: U40140307P	**POC Name:** Mr. William Henry	**POC Phone #:** 717-824-3588

Category	Findings	Work Needed
Asbestos Management	Reserve Center does not have an Asbestos Management Plan	- Develop Installation Asbestos Management Plan

Recommendations:

Installations are required to prepare, coordinate, and execute and Installation Asbestos Management Plan (AR200-1, para 10-3).

COST ESTIMATE ANALYSIS		INVITATION/ CONTRACTOR		EFFECTIVE PRICING DATE		DATE PREPARED:	
ESTIMATOR	Frank Nolan	CHECKED BY		DRAWING NO.		SHEET 1 OF 1 SHEETS	

TASK DESCRIPTION	UNITS	MEAS	COST	SI&Q*	Sub-Total	Admin OH @ 5%:	Total
Develop Asbestos Management Plan	1	Jb	20,000	2,000	22,000	1100	23,100
TOTALS THIS SHEET							23,100

*Supervision, Inspection & Quality Assurance

For use of this form, se TM 5 800 w: the proponent agency is USACE

CFA - Environmental Detail Summary

Facility Name: Wilkes Barre USARC	**Facility Location:** Wilkes Barre, PA	**Command:** 99th Regional Support
Work Order Number: U40140307P	**POC Name:** Mr. William Henry	**POC Phone #:** 717-824-3588

Category	Findings	Work Needed
Air Emissions Management	The facility does not maintain an inventory of stationary sources of air pollution	- Conduct air emission survey and develop report

Recommendations:

Preventive Medicine personnel should conduct an air emissions inventory listing all stationary sources of air pollution and assess compliance with applicable standards (AR 40-5, AR200-1). A copy of the Air Emission Source Report should be maintained at the facility.

COST ESTIMATE ANALYSIS		INVITATION/ CONTRACTOR		EFFECTIVE PRICING DATE		DATE PREPARED:	
ESTIMATOR	Frank Nolan	CHECKED BY		DRAWING NO.		SHEET 1 OF 1 SHEETS	

TASK DESCRIPTION	UNITS	MEAS	COST	SI&Q*	Sub-Total	Admin OH @ 5%:	Total
N/A							
TOTALS THIS SHEET							

*Supervision, Inspection & Quality Assurance

For use of this form, se TM 5 800 w: the proponent agency is USACE

CFA - Environmental Detail Summary

Facility Name: Wilkes Barre USARC	**Facility Location:** Wilkes Barre, PA	**Command:** 99th Regional Support
Work Order Number: U40140307P	**POC Name:** Mr. William Henry	**POC Phone #:** 717-824-3588

Category	Findings	Work Needed
Hazardous Materials Management	- Facility is required to develop a HAZCOM Program	- Develop HAZCOM Program

Recommendations:

Facilities are required to have a written hazard communication program that is designed to provide all employees with information about the hazardous chemicals they are exposed to (29 CFR 1910.1200).

COST ESTIMATE ANALYSIS		INVITATION/ CONTRACTOR		EFFECTIVE PRICING DATE		DATE PREPARED:	
ESTIMATOR	Frank Nolan	CHECKED BY		DRAWING NO.		SHEET 1 OF 1 SHEETS	

TASK DESCRIPTION	UNITS	MEAS	COST	SI&Q*	Sub-Total	Admin OH @ 5%:	Total
Develop Hazard Communication Program	1	Jb	15,000	1,500	16,500	825	17,325
TOTALS THIS SHEET							17,325

*Supervision, Inspection & Quality Assurance

For use of this form, se TM 5 800 w: the proponent agency is USACE

CFA - Environmental Detail Summary

Facility Name: Wilkes Barre USARC	**Facility Location:** Wilkes Barre, PA	**Command:** 99th Regional Support
Work Order Number: U40140307P	**POC Name:** Mr. William Henry	**POC Phone #:** 717-824-3588

Category	Findings	Work Needed
Hazardous Materials Management	Facility is required to have MSDS for each hazardous chemical at the facility	Acquire MSDS for each hazardous chemical and make MSDS readily available to all employees

Recommendations:

Facilities are required to have on file a MSDS for each hazardous chemical stored and used at the facility (29 CFR 1910.1200). Currently, software containing MSDS for all hazardous chemicals is available on CD-ROM from various venders.

COST ESTIMATE ANALYSIS		INVITATION/ CONTRACTOR		EFFECTIVE PRICING DATE		DATE PREPARED:	
ESTIMATOR	Frank Nolan	CHECKED BY		DRAWING NO.		SHEET 1 OF 1 SHEETS	

TASK DESCRIPTION	UNITS	MEAS	COST	SI&Q*	Sub-Total	Admin OH @ 5%:	Total
N/A							
TOTALS THIS SHEET							

*Supervision, Inspection & Quality Assurance

For use of this form, se TM 5 800 w: the proponent agency is USACE

CFA - Environmental Detail Summary

Facility Name: Wilkes Barre USARC	**Facility Location:** Wilkes Barre, PA	**Command:** 99th Regional Support
Work Order Number: U40140307P	**POC Name:** Mr. William Henry	**POC Phone #:** 717-824-3588

Category	Findings	Work Needed
Hazardous Materials Management	Personnel working with hazardous materials require training	Verify that employees working with hazardous materials have been trained properly

Recommendations:

Personnel working with hazardous materials are required to be trained in their use and the potential hazards of such materials (29 CFR 1910.1200).

COST ESTIMATE ANALYSIS		INVITATION/ CONTRACTOR		EFFECTIVE PRICING DATE		DATE PREPARED:	
ESTIMATOR	Frank Nolan	CHECKED BY		DRAWING NO.		SHEET 1 OF 1 SHEETS	

TASK DESCRIPTION	UNITS	MEAS	COST	SI&Q*	Sub-Total	Admin OH @ 5%:	Total
N/A							
TOTALS THIS SHEET							

*Supervision, Inspection & Quality Assurance

For use of this form, se TM 5 800 w: the proponent agency is USACE

CFA - Environmental Detail Summary

Facility Name: Wilkes Barre USARC	**Facility Location:** Wilkes Barre, PA	**Command:** 99th Regional Support
Work Order Number: U40140307P	**POC Name:** Mr. William Henry	**POC Phone #:** 717-824-3588
Category	**Findings**	**Work Needed**
Hazardous Materials Management SARA Title III Emergency Planning Community Right To Know Act (EPCRA)	Facilities are required to meet specific MSDS reporting requirements for planning purposes (EO 12856; 40 CFR 370.20, 370.21, and 370.28).	Have a survey of facility chemicals accomplished and determine if facility is required to submit Tier I and Tier II reports to the State, Emergency Commission, and the local Fire Department

Recommendations:

A survey of chemicals stored at the facility should be accomplished to determine if the Reserve Center is required to submit MSDS's, Tier I and Tier II Reports to the emergency commission and the fire department for each Hazardous Chemical or Extremely Hazardous Chemical at the facility with a quantity greater than the threshold planning quantity from the list of chemicals covered in Title III of SARA.

COST ESTIMATE ANALYSIS		INVITATION/ CONTRACTOR		EFFECTIVE PRICING DATE		DATE PREPARED:	
ESTIMATOR	Frank Nolan	CHECKED BY		DRAWING NO.		SHEET 1 OF 1 SHEETS	

TASK DESCRIPTION	UNITS	MEAS	COST	SI&Q*	Sub-Total	Admin OH @ 5%:	Total
N/A							
TOTALS THIS SHEET							

*Supervision, Inspection & Quality Assurance

For use of this form, se TM 5 800 w: the proponent agency is USACE

DEPARTMENT OF THE ARMY
UNITED STATES ARMY FACILITY ENGINEER GROUP
416TH ENGINEER COMMAND
10 S.100 SOUTH FRONTAGE ROAD
DARIEN, IL 60561-1780

ENGINEERING AND ENVIRONMENTAL FACILITY ASSESSMENT

For

Wilkes-Barre United States Army Reserve Center

Wilkes-Barre, Pennsylvania
Facility I.D. No. PA099

Date of Visit: 6-7 December 2001

PREPARED BY:

FACILITY ENGINEER GROUP (416th ENCOM)
FACILITY ENGINEER CENTER - NORTHEAST

FORT INDIANTOWN GAP
FACILITY ENGINEERING TEAM
Annville, Pennsylvania

31 January 2002

FACILITY ENGINEER GROUP
USAR FACILITY
ENGINEERING AND ENVIRONMENTAL
FACILITY ASSESSMENT

INSTALLATION NAME: WILKES-BARRE UNITED STATE ARMY RESERVE CENTER
INSTALLATION NUMBER: PA007 DATE: 6-7 DECEMBER 2001

TABLE OF CONTENTS

SECTION	DESCRIPTION
1.	EXECUTIVE SUMMARY
2.	FACILITY IDENTIFICATION
3.	FACILITY DATA
4.	IFS (INTEGRATED FACILITIES SYSTEM) COLLECTION DATA

ENCLOSURES:

A. ENVIRONMENTAL COMPLIANCE ASSESSMENT

B. FACILITY CONDITION SURVEY

C. REAL PROPERTY MAINTENANCE ACTIVITIES & PROJECT DOCUMENTATION

D. ARMS VAULT CERTIFICATION

E. ISR (INSTALLATION STATUS REPORT)

SECTION 1 - EXECUTIVE SUMMARY

INSTALLATION NAME: WILKES-BARRE USAR CENTER
INSTALLATION NUMBER: PA099 DATE: 6-7 DECEMBER 2001

1. The Wilkes-Barre United States Army Reserve Center (USARC) was assessed on 6 and 7 December 2001 by the Fort Indiantown Gap FE Team. The facility is located in a commercial area in northeast Pennsylvania adjacent to Interstate 81 and on PA State highway 315 in Wilkes-Barre. The USAR Center is occupied by the 828th Quartermaster (82 personnel assigned, 69 authorized), and the 3rd of the 80th Training Division (60 personnel assigned, 63 authorized). The USARC consists of a two story concrete-block constructed building (approximately 23,709 gross square feet) with a separate similarly constructed Organizational Maintenance Shop (OMS) (approximately 3,905 gross square feet).. In addition, there are four privately owned vehicle (POV) parking areas and a fenced military equipment parking (MEP) area.

2. The facility was constructed in 1952 and is in good repair. The center has had a new stucco finish installed on the exterior, along with new downspouts and gutters. The facility recently (1991) received some energy efficient upgrades (new energy-efficient windows, gas-fired boilers and a new gas water heater). The main building heating system is natural gas hot water baseboard in the unit areas and two gas-fired infrared heaters in the assembly hall. An overhead gas-fired infrared heater heats the OMS. The OMS exterior has been recently painted, but several items in the OMS still need to be addressed. New roll up access doors need to be installed, a new ceiling with adequate lighting must be put in place. Protection bollards must be installed around all OMS access points and corners, as well as around the fire hydrant and gas meter situated in the MEP. New exterior security lighting must also be installed around the USAR Center, OMS, and MEP. There are also repairs needed on exterior steps, sidewalks and a retaining wall in the MEP parking area.

3. Environmental Compliance: The Environmental Compliance Assessment portion of the E2FA identified a total of 10 findings; 3 Regulatory Class II, 7 Class III, and 1 Regulatory Health/Safety findings. The Class II findings relates to a non-existent oil/water separator, and no protection bollards around buildings, fire hydrant and natural gas line inside the MEP. The Class III findings relate to management procedures concerning environmental compliance. A copy of the findings along with recommended corrective actions is attached as Enclosure A. This enclosure is also intended to serve as the facility's quadrennial external environmental assessment report.

4. Facility Condition Survey: An evaluation of the overall condition of the facility was performed in accordance with USARC Surveyor's User Manual dated July 1997, using the short (single-page) Facility Condition Survey form. A copy of the Facility Condition Survey is provided in Enclosure B, and a copy has been forwarded directly via e-mail to USARC-DCSENG.

5. Real Property Maintenance: The main building is constructed of concrete masonry unit (CMU) interior walls covered by a stucco veneer exterior walls with concrete floors. The OMS consists of CMU interior walls and brick veneer exterior walls with a concrete

floor. The overall condition of the facility is very good. Most of the major building components have been well maintained or recently upgraded/replaced. The roofing system is in good condition and does not need replaced. Interior renovation and painting is desperately needed in the restrooms. The exterior brick veneer of the OMS needs to have several bricks replaced and the mortar re-pointed. A comprehensive asbestos survey and lead certification are required, and if previously performed a copy of the report should be maintained onsite. Suspect asbestos material is present in the 9-inch by 9-inch floor tiles under the new flooring and suspect asbestos-containing pipe insulation is found in the OMS. No lead abatement documentation was available for the former rifle range, which is being converted for office space and storage area. Bollards need to be installed in the MEP to protect the OMS corners and entrances into the shop area. Bollards must also be installed around the fire hydrant located in the parking area of the MEP, in addition to around the incoming natural gas line and meter, as well as the corner of the USAR Center, which are both part of the MEP. Very few minor deficiencies were noted, as the facility is well maintained and very presentable.

6. During the site visit, the assessment team reviewed a summary of the work orders, a RISER reportwas nor provided for this site visit. This work orders have been annotated to reflect item validity and to adjust the estimated costs, resulting in a revised a total estimated cost of $264,500.50. Additional new RPMA work estimated at $169,900 was identified during the assessment. All real property maintenance information is contained in Enclosure C.

7. Arms Vault Certification: The Army Reserves arms vault was inspected, but not re-certified IAW AR 190-11, which requires such action be conducted by appropriate engineer personnel every 5 years. The tumbler mechanism on the vault door needs to be repaired. The DA Form 4604-R was **NOT** updated. The arms vault inspection checklists and DA Form 4604-Rs are contained in Enclosure D.

8. ISR: Details relating to the Installation Status Report for the USARC are contained in Enclosure E.

9. Mr. John Yando and SFC Dan Claussen were extremely helpful and cooperated in assisting the team with this visit. Their dedication and professionalism greatly simplified our team's ability to accomplish the mission.

J-B Chadwick
MAJ, EN, USAR
Mechanical Engineer
FIG FET

SECTION 2: FACILITY IDENTIFICATION

INSTALLATION NAME: WILKES-BARRE UNITED STATES ARMY RESERVE CENTER

INSTALLATION NUMBER: PA099

STREET ADDRESS: 1001 Highway 315 South
CITY/TOWN: Wilkes-Barre
STATE: PA
ZIP CODE: 18701-6926
RSC/RSG: 99th RSC
FACILITY TYPE:

A. USARC: X	B. AFRC: ___	C. OMS: X	D. FLIGHT: ___
E. DS/GS: ___	F. MED: ___	G. WET: ___	H. FLIGHT: ___
I. ECS: ___	J. CTF: ___	K. OTHER:	

ASSESSMENT PERFORMED BY: Ft. Indiantown Gap FET
FACILITY ENGINEER TEAM INCLUDED:

MAJ J-B Chadwick
SFC Kilpatrick

REFER TO FOR INFORMATION: MAJ J-B Chadwick

Work: (732) 225-6040 Home: (215) 547-2827

PERSONNEL CONTACTED ON SITE:

NAME/GRADE	DUTY POSITION	PHONE NUMBER	E-MAIL
Mr. John Yando	Facility Manager	(888) 249-8365	
SFC Dan Claussen	Facility Coordinator	(215) 443-1750	daniel.claussen@usarc-emh2.army.mil

ASSESSMENT CONDUCTED FROM: 6 December 2001/1000 TO: 7 December 2001/1400

DATE OF LAST ASSESSMENT: 22-23 APR 1997

SECTION 3: FACILITY DATA

INSTALLATION NAME: WILKES-BARRE UNITED STATES ARMY RESERVE CENTER

INSTALLATION NUMBER: PA099 DATE: 6-7 DECEMBER 2001

NUMBER OF BUILDINGS ON SITE: 2

GROSS SQUARE FEET OF BUILDINGS: 27,614 GSF

SQUARE YARDS OF PAVED AREAS:
MEP: 3,097 POV: 5,297 ACCESS ROAD: 1,099
SIDEWALKS: 222 TOTAL: 9,715

IMPROVED: X UNIMPROVED: TOTAL:
FLOOD PRONE AREA: YES __ NO _X_ WETLANDS: YES __ NO _X_

OWNERSHIP DATA:	ARMY	OTHER DOD	OTHER FED	LEASED	OWNER NAME (NON ARMY)
BLDGS:	X				
LAND:	X				

YEAR CONSTRUCTED: 1952
AFRC:
AMSA:
YEAR OF LAST MAJOR IMPROVEMENTS: 2000
AFRC:
AMSA:
RECURRING NON-TRAINING ACTIVITIES: None

SECTION 4: IFS (Integrated Facility System) Collection Data

FACID	PA099	
SITE VISIT DATE	06-Dec-01	
SITE NAME	Wilkes Barre USARC	
Building #1	23709	Gross Square Feet
Building #2	3905	Gross Square Feet
Building #3		Gross Square Feet
Building #4		Gross Square Feet
Building #5		Gross Square Feet
POV Pavement	5297	Square Yards
MEP Pavement	3097	Square Yards
Roads	1099	Square Yards
Sidewalk	222	Square Yards
Fence Line	598	Linear Feet

	Width	Rolling/Hinged/Other		
Gate #1	35 Feet	☑	☐	☐
Gate #2	4.5 Feet	☐	☑	☐
Gate #3	4 Feet	☐	☑	☐
Gate #4		☐	☐	☐
Gate #5		☐	☐	☐

Gate Type is either: 1) Slide-By/Rolling 2) Hinged or 3) Other

Completed by:	SFC James Kilpatrick
Verified by:	
Date:	3 FEB 02

NOTES: If a measured number is not within 10% of preexisting data the difference needs to be documented.

ENCLOSURE A

DEPARTMENT OF THE ARMY
HEADQUARTERS, U.S. ARMY FACILITY ENGINEER GROUP (FEG)
10 S 100 South Frontage Road
Darien, IL 60561-1780

ENVIRONMENTAL COMPLIANCE ASSESSMENT

For

Wilkes-Barre USAR Center

Wilkes-Barre, Pennsylvania
Facility I.D. No. **PA099**

Date of Visit: 6-7 DEC 2001

PREPARED BY:

U.S. ARMY FACILITY ENGINEER GROUP (FEG)
FACILITY ENGINEER CENTER – NORTHEAST

FORT INDIANTOWN GAP
FACILITY ENGINEER TEAM
Annville, Pennsylvania

ENCLOSURE A

U.S. ARMY FACILITY ENGINEER GROUP (FEG)
USAFRC FACILITY
ENGINEERING AND ENVIRONMENTAL
FACILITY ASSESSMENT

ENVIRONMENTAL COMPLIANCE ASSESSMENT

INSTALLATION NAME: Wilkes-Barre USAR Center

INSTALLATION NUMBER: PA099 DATE: 6-7 December 2001

TABLE OF CONTENTS

SECTION	DESCRIPTION
1.	EXECUTIVE SUMMARY
2.	FACILITY IDENTIFICATION
3.	INSTALLATION/ASSESSMENT
4.	SUMMARY OF FINDINGS
5.	FINDING SHEETS

SECTION 1: EXECUTIVE SUMMARY

INSTALLATION NAME: Wilkes-Barre USAR Center, Wilkes Barre, Pennsylvania

INSTALLATION NUMBER: PA099 DATE: 6-7 December 2001

1. As part of the Engineering and Environmental Facility Assessment (E2FA) at the Wilkes-Barre US Army Reserve Center, an environmental compliance assessment (ECAS) was conducted. The USARC consists of a two story concrete-block constructed building with a separate similarly constructed OMS. Besides the two buildings, there is four privately owned vehicle (POV) parking areas and a fenced military equipment parking (MEP) area. The facility was constructed in 1952. The USAR Center is occupied by the 828th Quartermaster (82 personnel assigned, 69 authorized), and the 3rd of the 80th Training Division (60 personnel assigned, 63 authorized).

2. The Environmental Compliance Assessment portion of the E2FA identified a total of 13 findings; 3 Regulatory Class II, 7 Class III, 1 Regulatory Health/Safety findings and two Management Health/Safety findings as indicated on the Summary of Findings sheet (Section 4 of this Enclosure). The Class II findings relates to a non-existent oil/water separator, and no protection bollards around buildings, fire hydrant and natural gas line inside the MEP, and improper gas cylinder storage. The Class III findings relate to management procedures concerning environmental compliance. A copy of the findings along with recommended corrective actions is attached as Enclosure A. This enclosure is also intended to serve as the facility's quadrennial external environmental assessment report.

3. Significant findings are summarized in the comments below:

   - No oil water separator installed for vehicle wash rack.
   - No protection bollards around OMS, fire hydrant, natural gas supply line and gas meter, or around corner of main building, which is in the MEP.
   - Several compressed gas cylinders were improperly stored in the OMS area. Oxygen and acetylene were stored together and were not properly secured.
   - The kitchen does not have a fume hood or fire suppression system associated with the stove.
   - Rifle range being converted to office space and equipment storage. No lead testing, abatement or range closure documentation could be located at the site.
   - No asbestos survey or asbestos management plan available onsite.

4. Mr. John Yando, the Facility Manager, and SFC Dan Claussen, the Facility Coordinator, were extremely helpful and cooperated in assisting the team with this visit. Their dedication and professionalism greatly simplified our team's ability to accomplish this mission.

J-B CHADWICK
MAJ, EN, USAR
Mechanical Engineer

SECTION 2: FACILITY IDENTIFICATION

INSTALLATION NAME: Wilkes-Barre USAR Center

INSTALLATION NUMBER: PA099 DATE: 6-7 December 2001

STREET ADDRESS: 1001 Highway 315 South
CITY/TOWN: Wilkes-Barre
STATE: Pennsylvania
ZIP CODE: 18701-6926

RSC/RSG: 99TH RSC; Oakdale, Pennsylvania

FACILITY TYPE:

A. USARC: X	B. AFRC: ___	C. OMS: ___	D. FLIGHT: ___
E. DS/GS: ___	F. MED: ___	G. WET: ___	H. FLIGHT: ___
I. ECS: ___	J. CTF: ___	K. OTHER: ___	

ASSESSMENT PERFORMED BY: Fort Indiantown Gap FET

FACILITY ENGINEER TEAM INCLUDED:

MAJ J-B Chadwick SFC James Kilpatrick

REFER TO FOR INFORMATION:

MAJ J-B Chadwick
165 Juniper Drive
Levittown, PA 19056
(732) 225-6040, FAX (732) 225-4577
E-mail: jeanbruce.chadwick@us.army.mil

PERSONNEL CONTACTED ON SITE:

NAME/GRADE	DUTY POSITION	PHONE NUMBER	E-MAIL
Mr. John Yonda	Facility Manager	(888) 249-8365	
SFC Dan Claussen	Facility Coordinator	(215) 443-1750	daniel.claussen@usarc-emh2.army.mil

ASSESSMENT CONDUCTED FROM: 6-7 DEC 2001

DATE OF LAST ASSESSMENT: 22-23 April 1997

SECTION 3: INSTALLATION/ASSESSMENT

FFID: PA-2104PA099
Installation Name: WILKES-BARRE USARC
Installation Category: R
MACOM: USARC
MUSARC:
BASOPS ARCOM: 99TH RSC
Support Installation: FORT INDIANTOWN GAP
Facility / Activity Type: 1) RM 2) OM 3) 4) 5)

EPA Region: 3
Congressional District:
Address: 1001 HIGHWAY 315 SOUTH
City: WILKES-BARRE
State: PA
Country: USA
Zip Code: 18701-6926

Fiscal Year: 2001 Assessment Date (MM/DD/YYYY): 12/06/2001
Assessment Type: Environmental
Manual Used: T

Manual Supplement Used: SL

Assessor Name: MAJ J-B CHADWICK
Point of Contact: MR. JOHN YANDO

Address: 1001 HIGHWAY 315 SOUTH
City: WILKES-BARRE
State: PA
Zip Code: 18701-6926
Phone: (888) 249-8365

For Contract ECAS
Contract Number:
Delivery Order Number:
Contracting Office:

SECTION 4: SUMMARY OF FINDINGS

TABLE 1-1
SUMMARY OF FINDINGS

INSTALLATION: WILKES-BARRE USARC
FFID: PA099

Fiscal Year: 2001

SECTION NO.	TITLE	REGULATORY 1	REGULATORY 2	REGULATORY HS	MANAGEMENT POS	MANAGEMENT 3	MANAGEMENT HS	TOTAL
A	Air Emissions	0	0	0	0	1	0	1
C	Cultural Resources	0	0	0	0	0	0	0
HM	Hazardous Materials	0	1	0	0	2	1	4
HW	Hazardous Waste	0	0	0	0	0	0	0
NR	Natural Resource	0	0	0	0	0	0	0
O1	Environmental Impacts	0	0	0	0	0	0	0
O2	Environmental Noise	0	0	0	0	1	0	1
O3	IRP	0	0	0	0	0	0	0
O4	Pollution Prevention	0	0	0	0	1	0	1
O5	Program Management	0	1	0	0	0	0	1
PM	Pesticide	0	0	0	0	0	0	0
PO	POL	0	0	0	0	0	0	0
SO	Solid Waste	0	0	0	0	0	1	1
ST	Storage Tanks	0	0	0	0	0	0	0
T1	PCB	0	0	0	0	1	0	1
T2	Asbestos	0	0	1	0	1	0	2
T3	Radon	0	0	0	0	0	0	0
T4	Lead Based Paint	0	0	0	0	0	0	0
WA	Wastewater	0	1	0	0	0	0	1
WQ	Water Quality	0	0	0	0	0	0	0
	TOTALS	0	3	1	0	7	2	13

Data File Name Prefix: C:\ECAS\WILKES
Date Summary Report Produced: 12/09/1

SECTION 5: FINDING SHEETS

HM.1.2 #1 III FEDERAL FINDING
MANUAL QUESTION NUMBER: HM-001-002 FINDING ID: PA-099-1
FINDING CATEGORY: CLASS III
FINDING TYPE: Negative EXISTING NOV: NO
LOCATION: HOUSEKEEPING STORAGE AREAS.
IFS FACILITY NUMBER: PA-099
FACILITY TYPE: USARC(MB) - U.S. ARMY RESERVE CENTER - MAIN BLDG

FINDING DESCRIPTION: A multitude of houskeeping chemicals are found onsite, to include soaps, disinfectants, floor wax and miscellaneous items. These materials belong to an outside contractor who performs the housekeeping activities in the Reserve Center.

CRITERIA: Material safety data sheets (MSDSs) are required to be maintained onsite for all chemicals that are stored at the facility. (29 CFR 1910.1200 (b) (3, 4, 6), 1900.1200 (g) (1,8)

FINDING COMMENTS:

SUGGESTED/ALTERNATIVE CORRECTIVE ACTION(S): Obtain copies of the MSDSs for all materials stored or used at the installation. Ensure that the MSDSs are provided when the chemicals are procured.

STATUS OF CORRECTION:

INSTALLATION RESPONSE:
CORRECTIVE ACTION DESCRIPTION: _____

_____
_____
_____
_____
_____
_____

DATE CORRECTIVE ACTION COMPLETED: _____

ESTIMATED DATE CORRECTIVE ACTION TO BE COMPLETED: _____
1383 PROJECT # (IF APPLICABLE): _____

POC: _____ PHONE NUMBER: _____

O5.1.2.R #1 II GMP FINDING
MANUAL QUESTION NUMBER: O5-001-002-R FINDING ID: PA-099-2
FINDING CATEGORY: CLASS II
FINDING TYPE: Negative EXISTING NOV: NO
LOCATION: MILITARY EQUIPMENT PARKING
IFS FACILITY NUMBER: PA-099
FACILITY TYPE: MEP - PARKING AREA MEP

FINDING DESCRIPTION: A fire hydrant is located within the fenced area of the MEP and has no protection (bollards) to keep it from being struck by a vehicle. Additionally it is not accessible to the fire department in case of a fire and the MEP is secured.

CRITERIA: Management and organization of paperwork, materials, and personnel should be done in a manner that prevents noncompliance and recurrence of noncompliance, precludes/minimizes regulatory enforcement actions (including warning letters etc.), promotes good public relations, and addresses systemic weaknesses in the overall operation of the program (MP).

FINDING COMMENTS:

SUGGESTED/ALTERNATIVE CORRECTIVE ACTION(S): Remove the fire hydrant from inside the MEP and place in an area that does not have vehicular traffic and is still near the Organizational Maintenance Shop and motor pool. If this is not poosible, bollords should be installed around the fire hydrant, parking should not be permitted near the fire hydrant, and the hydrant should be painted an obvious bright color.

STATUS OF CORRECTION:

INSTALLATION RESPONSE:
CORRECTIVE ACTION DESCRIPTION: _____

_____
_____
_____
_____
_____
_____

DATE CORRECTIVE ACTION COMPLETED: _____

ESTIMATED DATE CORRECTIVE ACTION TO BE COMPLETED: _____
1383 PROJECT # (IF APPLICABLE): _____

POC: _____ PHONE NUMBER: _____

HM.10.1 #1 HS FEDERAL FINDING
MANUAL QUESTION NUMBER: HM-010-001 FINDING ID: PA-099-3
FINDING CATEGORY: HEALTH/SAFETY
FINDING TYPE: Negative EXISTING NOV: NO
LOCATION: MAIN BUILDING AND OMS
IFS FACILITY NUMBER: PA-099
FACILITY TYPE: USARC(MB) - U.S. ARMY RESERVE CENTER - MAIN BLDG

FINDING DESCRIPTION: A written Hazard Communication Program is not available at the facility.

CRITERIA: Installations/CW facilities are required to have a written hazard communication program that is designed to provide all employees with information about the hazardous chemicals to which they are exposed (29 CFR 1910.1200(b)(1) and 1910.1200(e)(1)) [February 1995].

FINDING COMMENTS:

SUGGESTED/ALTERNATIVE CORRECTIVE ACTION(S): The 99th RSC should provide a generic Hazard Communication Program and the facility should fill in the site specific information and attach acopy of a current inventory of all chemicals used at the facility.

STATUS OF CORRECTION:

INSTALLATION RESPONSE:
CORRECTIVE ACTION DESCRIPTION: _____
_____
_____
_____
_____
_____
_____

DATE CORRECTIVE ACTION COMPLETED: _____

ESTIMATED DATE CORRECTIVE ACTION TO BE COMPLETED: _____
1383 PROJECT # (IF APPLICABLE): _____

POC: _____ PHONE NUMBER: _____

HM.45.1 #1 II FEDERAL FINDING
MANUAL QUESTION NUMBER: HM-045-001 FINDING ID: PA-099-4
FINDING CATEGORY: CLASS II
FINDING TYPE: Negative EXISTING NOV: NO
LOCATION: ORGANIZATIONAL MAINTENANCE SHOP
IFS FACILITY NUMBER: PA-099
FACILITY TYPE: OMS - ORGANIZATIONAL MAINTENANCE SHOP

FINDING DESCRIPTION: Compressed gas cylinders used for welding operations are not stored properly. They are not secured against tip over, and acetalyene and oxygen are stored together.

CRITERIA: The in-plant storage, handling, and utilization of all compressed gases in cylinders, portable tanks, rail tankers, or motor vehicles must be done according to the Compressed Gas Association Pamphlet P-1-11965 (29 CFR 1910.101).

FINDING COMMENTS:

SUGGESTED/ALTERNATIVE CORRECTIVE ACTION(S): Obtain and install compressed gas cylinder storage cages.

STATUS OF CORRECTION:

INSTALLATION RESPONSE:
CORRECTIVE ACTION DESCRIPTION: _____
_____
_____
_____
_____
_____
_____

DATE CORRECTIVE ACTION COMPLETED: _____

ESTIMATED DATE CORRECTIVE ACTION TO BE COMPLETED: _____
1383 PROJECT # (IF APPLICABLE): _____

POC: _____ PHONE NUMBER: _____

A.4.1.R #1 III FEDERAL FINDING
MANUAL QUESTION NUMBER: A-004-001-R FINDING ID: PA-099-5
FINDING CATEGORY: CLASS III
FINDING TYPE: Negative EXISTING NOV: NO
LOCATION: USARC MAIN BUILDING, 2ND FLOOR, RIFLE RANGE
IFS FACILITY NUMBER: PA-099
FACILITY TYPE: USARC(MB) - U.S. ARMY RESERVE CENTER - MAIN BLDG

FINDING DESCRIPTION: A lead sampling report for the rifle range that has been converted to office and storage space, is not available onsite.

CRITERIA: Lead exposure for personnel should be within specific limits (MP).

FINDING COMMENTS:

SUGGESTED/ALTERNATIVE CORRECTIVE ACTION(S): Obtain the lead clearance sampling results from the 99th RSC and maintain the records onsite.

STATUS OF CORRECTION:

INSTALLATION RESPONSE:
CORRECTIVE ACTION DESCRIPTION: _____

_____
_____
_____
_____
_____
_____

DATE CORRECTIVE ACTION COMPLETED: _____

ESTIMATED DATE CORRECTIVE ACTION TO BE COMPLETED: _____
1383 PROJECT # (IF APPLICABLE): _____

POC: _____ PHONE NUMBER: _____

SO.25.1.R #1 HS ARMY/DOD FINDING
MANUAL QUESTION NUMBER: SO-025-001-R FINDING ID: PA-099-6
FINDING CATEGORY: HEALTH/SAFETY
FINDING TYPE: Negative EXISTING NOV: NO
LOCATION: ENTIRE USAR CENTER
IFS FACILITY NUMBER: PA-099
FACILITY TYPE: USARC(MB) - U.S. ARMY RESERVE CENTER - MAIN BLDG

FINDING DESCRIPTION: Re-cyclying of solid waste materials such as paper, aluminum and plastic are not being performed at this facility, and the township does have a recycling program.

CRITERIA: Reserve facilities are required to participate in any state or local recycling programs and to reduce the volume of solid waste materials at the source whenever practical (DOD 4165.60, para V(a), V(c), and V(h), and AR 200-1, para 6-14a).

FINDING COMMENTS:

SUGGESTED/ALTERNATIVE CORRECTIVE ACTION(S): Provide seperate waste containers for waste office paper, aluminum cans, plastic and regular garbage. Work with the local municipality to determine what the recycling requirements are.

STATUS OF CORRECTION:

INSTALLATION RESPONSE:
CORRECTIVE ACTION DESCRIPTION: _____

_____
_____
_____
_____
_____
_____

DATE CORRECTIVE ACTION COMPLETED: _____

ESTIMATED DATE CORRECTIVE ACTION TO BE COMPLETED: _____
1383 PROJECT # (IF APPLICABLE): _____

POC: _____ PHONE NUMBER: _____

O2.1.10.R #1 III ARMY/DOD FINDING
MANUAL QUESTION NUMBER: O2-001-010-R FINDING ID: PA-099-7
FINDING CATEGORY: CLASS III
FINDING TYPE: Negative EXISTING NOV: NO
LOCATION: ENTIRE ARMY RESERVE FACILITY
IFS FACILITY NUMBER: PA-099
FACILITY TYPE: USARC(MB) - U.S. ARMY RESERVE CENTER - MAIN BLDG

FINDING DESCRIPTION: Procedures for receiveing noise complaints is not available onsite.

CRITERIA: Facilities must institute a noise complaint procedure (AR 200-1, para 7-3).

FINDING COMMENTS:

SUGGESTED/ALTERNATIVE CORRECTIVE ACTION(S): Obtain a copy of the ICUZ study from the 99th RSC, if performed. Institute a noise complaint procedure at the facility using guidance from the 99th RSC.

STATUS OF CORRECTION:

INSTALLATION RESPONSE:
CORRECTIVE ACTION DESCRIPTION: _____

_____
_____
_____
_____
_____
_____

DATE CORRECTIVE ACTION COMPLETED: _____

ESTIMATED DATE CORRECTIVE ACTION TO BE COMPLETED: _____
1383 PROJECT # (IF APPLICABLE): _____

POC: _____ PHONE NUMBER: _____

O4.1.7.R #1 III ARMY/DOD FINDING
MANUAL QUESTION NUMBER: O4-001-007-R FINDING ID: PA-099-8
FINDING CATEGORY: CLASS III
FINDING TYPE: Negative EXISTING NOV: NO
LOCATION: ENTIRE USAR CENTER
IFS FACILITY NUMBER: PA-099
FACILITY TYPE: USARC(MB) - U.S. ARMY RESERVE CENTER - MAIN BLDG

FINDING DESCRIPTION: No listing of hazardous substances was found in the SPCC plan.

CRITERIA: A master listing of all hazardous substances at handling, storage, and transfer facilities is required as a part of the SPCC Plan (AR 200-1, para 8-4b(4)).

FINDING COMMENTS:

SUGGESTED/ALTERNATIVE CORRECTIVE ACTION(S): Inventory all hazardous substances found on the facility and include in the SPCC plan.

STATUS OF CORRECTION:

INSTALLATION RESPONSE:
CORRECTIVE ACTION DESCRIPTION: _____

DATE CORRECTIVE ACTION COMPLETED: _____

ESTIMATED DATE CORRECTIVE ACTION TO BE COMPLETED: _____
1383 PROJECT # (IF APPLICABLE): _____

POC: _____ PHONE NUMBER: _____

T2.1.3.R #1 HS ARMY/DOD FINDING
MANUAL QUESTION NUMBER: T2-001-003-R FINDING ID: PA-099-9
FINDING CATEGORY: HEALTH/SAFETY
FINDING TYPE: Negative EXISTING NOV: NO
LOCATION: ENTIRE USAR CENTER INCLUDING OMS
IFS FACILITY NUMBER: PA-099
FACILITY TYPE: USARC(MB) - U.S. ARMY RESERVE CENTER - MAIN BLDG

FINDING DESCRIPTION: Suspect asbestos containing floor 9-by 9-inch floor tiles found under the new 12- by 12-inch floor tiles, and suspect asbestos containing pipe insulation found in the OMS. No asbestos survey could be found onsite.

CRITERIA: Facilities are required to conduct an asbestos survey (AR 200-1, para 10-2j and 10-3b(1) through 10-3b(3)).

FINDING COMMENTS:

SUGGESTED/ALTERNATIVE CORRECTIVE ACTION(S):

STATUS OF CORRECTION:

INSTALLATION RESPONSE:
CORRECTIVE ACTION DESCRIPTION: _____

DATE CORRECTIVE ACTION COMPLETED: _____

ESTIMATED DATE CORRECTIVE ACTION TO BE COMPLETED: _____
1383 PROJECT # (IF APPLICABLE): _____

POC: _____ PHONE NUMBER: _____

T2.1.4.R #1 III ARMY/DOD FINDING
MANUAL QUESTION NUMBER: T2-001-004-R FINDING ID: PA-099-10
FINDING CATEGORY: CLASS III
FINDING TYPE: Negative EXISTING NOV: NO
LOCATION: ENTIRE USAR CENTER
IFS FACILITY NUMBER: PA-099
FACILITY TYPE: USARC(MB) - U.S. ARMY RESERVE CENTER - MAIN BLDG

FINDING DESCRIPTION: No asbestos survey, abatement report, or Management plan found onsite.

CRITERIA: Facilities are required to prepare, coordinate, and execute an Installation Asbestos Management Plan (AR 200-1, para 10-3).

FINDING COMMENTS:

SUGGESTED/ALTERNATIVE CORRECTIVE ACTION(S): Obtain a copy of the asbestos survey, any abatement reports and a sample Asbestos Management Plan from the 99th RSC. Implement a site specific Asbestos Management Plan for this facility.

STATUS OF CORRECTION:

INSTALLATION RESPONSE:
CORRECTIVE ACTION DESCRIPTION: _____

DATE CORRECTIVE ACTION COMPLETED: _____

ESTIMATED DATE CORRECTIVE ACTION TO BE COMPLETED: _____
1383 PROJECT # (IF APPLICABLE): _____

POC: _____ PHONE NUMBER: _____

WA.10.4 #1 II FEDERAL FINDING
MANUAL QUESTION NUMBER: WA-010-004 FINDING ID: PA-099-11
FINDING CATEGORY: CLASS II
FINDING TYPE: Negative EXISTING NOV: NO
LOCATION: OMS WASHRACK
IFS FACILITY NUMBER: PA-099
FACILITY TYPE: MEP - PARKING AREA MEP

FINDING DESCRIPTION: No Oil Water Seperator found in association with the vehicle wash rack. Wash rack drains directly to storm water run off.

CRITERIA: Even where not covered by NPDES permits, stormwater discharge on the installation/CW facility should be uncontaminated and periodic surveillance of these discharges should be completed (MP).

FINDING COMMENTS:

SUGGESTED/ALTERNATIVE CORRECTIVE ACTION(S): Submit work order to install oil water seperator on wash rack and drain to sanitary sewer.

STATUS OF CORRECTION:

INSTALLATION RESPONSE:
CORRECTIVE ACTION DESCRIPTION: _____

_____
_____
_____
_____
_____
_____

DATE CORRECTIVE ACTION COMPLETED: _____

ESTIMATED DATE CORRECTIVE ACTION TO BE COMPLETED: _____
1383 PROJECT # (IF APPLICABLE): _____

POC: _____ PHONE NUMBER: _____

HM.30.2 #1 III ARMY/DOD FINDING
MANUAL QUESTION NUMBER: HM-030-002 FINDING ID: PA-099-12
FINDING CATEGORY: CLASS III
FINDING TYPE: Negative EXISTING NOV: NO
LOCATION: ENTIRE USAR CENTER INCLUDING OMS
IFS FACILITY NUMBER: PA-099
FACILITY TYPE: USARC(MB) - U.S. ARMY RESERVE CENTER - MAIN BLDG

FINDING DESCRIPTION: The facility lacks a Hazardous Materials Inventory.

CRITERIA: Installations/CW facilities, that are required to prepare or have available a MSDS sheet for a hazardous chemical under OSHA, are required to meet specific inventory reporting requirements for planning purposes (EO 12856; 40 CFR 370.20, 370.25, and 370.28).

FINDING COMMENTS:

SUGGESTED/ALTERNATIVE CORRECTIVE ACTION(S): Inventory all chemical substances onsite, maintain a working copy of the inventory and keep MSDSs for each chemical identified.

STATUS OF CORRECTION:

INSTALLATION RESPONSE:
CORRECTIVE ACTION DESCRIPTION: _____

_____
_____
_____
_____
_____
_____

DATE CORRECTIVE ACTION COMPLETED: _____

ESTIMATED DATE CORRECTIVE ACTION TO BE COMPLETED: _____
1383 PROJECT # (IF APPLICABLE): _____

POC: _____ PHONE NUMBER: _____

T1.10.1 #1 III FEDERAL FINDING
MANUAL QUESTION NUMBER: T1-010-001 FINDING ID: PA-099-13
FINDING CATEGORY: CLASS III
FINDING TYPE: Negative EXISTING NOV: NO
LOCATION: USAR CENTER
IFS FACILITY NUMBER: PA-099
FACILITY TYPE: USARC(MB) - U.S. ARMY RESERVE CENTER - MAIN BLDG

FINDING DESCRIPTION: No survey for PCBs has been provided for this facility.

CRITERIA: All installations/CW facilities that use or store at any time at least 45 kg (99.4 lb) of PCBs contained in PCB Containers or one or more PCB Transformers (500 ppm or greater), or 50 or more PCB Large, High-, or Low-Voltage Capacitors are required to keep an inventory (40 CFR 761.180(a)(2)((iii) through 761.180(a)(2) (vi)).

FINDING COMMENTS:

SUGGESTED/ALTERNATIVE CORRECTIVE ACTION(S): Contact the 99th RSC to determine if a PCB survey has been conducted, and if so obtain a copy of the report. If a survey has not been conducted, request the 99th RSC to have a survey for PCBs conducted at the facility.

STATUS OF CORRECTION:

INSTALLATION RESPONSE:
CORRECTIVE ACTION DESCRIPTION: _____

DATE CORRECTIVE ACTION COMPLETED: _____

ESTIMATED DATE CORRECTIVE ACTION TO BE COMPLETED: _____
1383 PROJECT # (IF APPLICABLE): _____

POC: _____ PHONE NUMBER: _____

ENCLOSURE B

DEPARTMENT OF THE ARMY
UNITED STATES ARMY FACILITY ENGINEER GROUP
416TH ENGINEER COMMAND
TDA AUGMENTATION
10 South 100 Frontage Road
Darien, IL 60561-1780

INTEGRATED FACILITIES SYSTEM (IFS)

For

Wilkes-Barre USAR Center

Wilkes-Barre, Pennsylvania
Facility I.D. No. PA099

Date of Visit: 6-7 December 2001

PREPARED BY:

FACILITY ENGINEER GROUP (416th ENCOM)
FACILITY ENGINEER CENTER - NORTHEAST

FORT INDIANTOWN GAP

FACILITY ENGINEERING TEAM
Annville, Pennsylvania

FAC ID: PA099		BLDG TYPE: OMS				YEAR BUILT: 1952		
FAC NUM: 1		GROSS SQ FT: 3905				DATE OF SURVEY: 6-Dec-01		

COMPONENT ROWS

	SYSTEM LIFETIME		EC (0-15%)	VG (16-24%)	GC (25-39%)	AC (40-59%)	FC (60-75%)	PC (76-100%)
EXTERIOR	60 YRS				X			
WINDOWS	15 YRS				X			
SITE	20 YRS				X			
ELEVATOR	15 YRS				N/A			
PAINTING (EXTERIOR)	10 YRS				X			
ELECTRICAL	25 YRS					X		
FLOORING	20 YRS						X	
CEILING	15 YRS							X
PAINTING (INTERIOR)	10 YRS							X
INTERIOR	40 YRS					X		
PLUMBING	25 YRS					X		
HVAC	20 YRS			X				
ROOF	25 YRS				X			

SIGNS OF POOR COMPONENT CONDITIONS

EXTERIOR: Cracked or loose mortar joints, loose siding, structural cracks, etc.
WINDOWS: Cracked, broken, require glazing, etc.
SITE: Drainage problems, inadequate parking for MEP/POV. Holes or cracks in pavement. Adequate security lighting, etc.
PAINTING: Peeling, cracking, etc.
ELECTRICAL: Defective, broken, inadequate wiring, antiquated or tarnished lighting fixtures or service equipment, not wired for 3 phase.
FLOORING: Cracks, sagging, worn or torn spots. Expansion joint separation, etc.
CEILING: Missing tiles, water stained, cracked or broken, etc.
INTERIOR: Cracks in drywall, plaster, or block, missing or loose hardware, peeling paint, mildew, smoke or water stains, insect or rodent damage.
PLUMBING: Leaking faucets or pipe connections. Inadequate or antiquated plumbing fixtures.
HVAC: Inadequate or poorly spaced equipment. Antiquated systems, high operating costs, furnaces or boilers in poor repair, rusted ductwork, etc.
ROOF: Leakage, missing shingles, or tiles, sagging or decaying roof structures, damaged trusses, plugged roof.

CONDITION RANKINGS

EC (Excellent Condition, 0%-15%): Items that can normally be repaired or refinished, have been corrected or replaced .
VG (Very Good Condition,16%-24%): Items well maintained, many repaired, refinished or replaced.
GC (Good Condition 25%-39%): No obvious maintenance required, but neither is everything new.
AC (Average Condition, 40%-59%): Some evidence of deferred maintenance and normal obsolescence with age.
FC (Fair Condition, 60%-75%): Evidence of badly worn components. Much repair is needed.
PC (Poor Condition, 76%-100%): Components are worn out. Repair or refinish is needed. Excessive deferred maint.

PA099

INVENTORY OF MILITARY REAL PROPERTY AS OF 09-OCT-2001

PCN AKJ-003

SUBINSTL NAME: WILKES-BARRIE USARC

SUB INSTL NO: 42970 PRI INSTL NO: 42560

BASE CODE: 420AR

MAJ CMD	USING AGCY	TYPE INSTL	STATUS CD	KIND NAME	OPERATOR CD	NAME	FUNCTION	NEAREST CITY NAME	DIST	DR	COUNTY SUBDIVISION	POLITICAL ST	YEAR ACQ	RURAL URBAN
S	SM	T	A	ACTIVE NON-INDUSTRIAL	V	RESERVE CENTERS		WILKES BARRE	001	N	LUZERNE	PA	1955	U

CAT CD/ DESC	BLDG/ FACNO	UM 1	AREA TOTAL	AREA OUTGRANT	VACANT AREA	UM 2	OTHER MEAS (TOT CAP)	COST TO GOVT(00)	IMPRV COST(00)	ESTIMATE VAL(000)
149 OPN FACS NON-B										
14955	77014					EA	1.0	12		
WASH PLAT ORG	TYPE CONS: P	OWN CD: 1	USG CD: S	DISP CD:	COND CD: B	YEAR BLT: 1962	#FL:	WALL MATL CD:	BRKS:	
SUBTOTS: BLDG STRUCT										
CONST P:	1					EA	1.0	12		
OWN 1:	1					EA	1.0	12		
CAT 149:	1					EA	1.0	12		
171 TRAINING BLDGS										
1714001	77001	SF	21503.00			PN	200.0	4243		
USARC(MB)	TYPE CONS: P	OWN CD: 1	USG CD: B	DISP CD:	COND CD: B	YEAR BLT: 1955	#FL: 2	WALL MATL CD: D	BRKS:	
SUBTOTS: BLDG STRUCT										
CONST P:	1	SF	21503.00			PN	200.0	4243		
OWN 1:	1	SF	21503.00			PN	200.0	4243		
CAT 171:	1	SF	21503.00			PN	200.0	4243		
214 TANK/AUTO MAIN										
2140901	77004	SF	3715.00					386		
OMS(MB)	TYPE CONS: P	OWN CD: 1	USG CD: B	DISP CD:	COND CD: B	YEAR BLT: 1959	#FL: 1	WALL MATL CD: D	BRKS:	
SUBTOTS: BLDG STRUCT										
CONST P:	1	SF	3715.00					386		
OWN 1:	1	SF	3715.00					386		
CAT 214:	1	SF	3715.00					386		

442 CVRD STR INST

44240	77002	SF	85.00	CF	680.0	13

FLAM MAT STR IN TYPE CONS: P OWN CD: 1 USG CD: B DISP CD: COND CD: B YEAR BLT: 1957 #FL: 1 WALL MATL CD: G BRKS:

SUBTOTS: BLDG STRUCT

CONST P:	1	SF	85.00	CF	680.0	13
OWN 1:	1	SF	85.00	CF	680.0	13
CAT 442:	1	SF	85.00	CF	680.0	13

INVENTORY OF MILITARY REAL PROPERTY AS OF 09-OCT-2001 PCN AKJ-003

SUBINSTL NAME: WILKES-BARRIE USARC SUB INSTL NO: 42970 PRI INSTL NO: 42560 BASE CODE: 420AR

MAJ USING TYPE ----- STATUS KIND OPERATOR -----						---------- FUNCTION ----------		-----NEAREST CITY-----		COUNTY POLITICAL	YEAR RURAL
CMD AGCY INSTL CD			NAME	CD	NAME			NAME	DIST DR	SUBDIVISION	ST ACQ URBAN
S	SM	T	A ACTIVE NON-INDUSTRIAL	V	RESERVE CENTERS			WILKES BARRE	001 N	LUZERNE	PA 1955 U

CAT CD/ DESC	BLDG/ FACNO	UM 1	AREA TOTAL	AREA OUTGRANT	VACANT AREA	UM 2	OTHER MEAS (TOT CAP)	COST TO GOVT(00)	IMPRV COST(00)	ESTIMATE VAL(000)
690 ADMIN STRUC										
69010	77003					EA	1.0		8	
FLAGPOLE	TYPE CONS: P	OWN CD: 1	USG CD: S	DISP CD:	COND CD: B	YEAR BLT: 1955	#FL:	WALL MATL CD:	BRKS:	
SUBTOTS: BLDG STRUCT										
CONST P:	1					EA	1.0		8	
OWN 1:	1					EA	1.0		8	
CAT 690:	1					EA	1.0		8	
812 ELEC PWR DIST										
81230	77601					LF	280.0		12	
EXT LIGHTING	TYPE CONS: P	OWN CD: 1	USG CD:	DISP CD:	COND CD: B	YEAR BLT: 1963	#FL:	WALL MATL CD:	BRKS:	
81241	77603					LF	283.0		27	
OH ELECT LINES	TYPE CONS: P	OWN CD: 1	USG CD:	DISP CD:	COND CD: B	YEAR BLT: 1959	#FL:	WALL MATL CD:	BRKS:	
SUBTOTS: BLDG STRUCT										
CONST P:						LF	563.0		39	
OWN 1:						LF	563.0		39	
CAT 812:						LF	563.0		39	
832 SEW IND WST CO										
83210	77709					LF	2550.0		174	
SANITARY SEWER	TYPE CONS: P	OWN CD: 1	USG CD:	DISP CD:	COND CD: B	YEAR BLT: 1955	#FL:	WALL MATL CD:	BRKS:	
SUBTOTS: BLDG STRUCT										
CONST P:						LF	2550.0		174	
OWN 1:						LF	2550.0		174	

CAT 832: LF 2550.0 174

842 WTR DIST SYS P

84210 77757 LF 601.0 28

WATER DIST POT TYPE CONS: P OWN CD: 1 USG CD: DISP CD: COND CD: B YEAR BLT: 1959 #FL: WALL MATL CD: BRKS:

SUBTOTS: BLDG STRUCT

CONST P: LF 601.0 28

OWN 1: LF 601.0 28

CAT 842: LF 601.0 28

INVENTORY OF MILITARY REAL PROPERTY AS OF 09-OCT-2001 PCN AKJ-003

SUBINSTL NAME: WILKES-BARRIE USARC SUB INSTL NO: 42970 PRI INSTL NO: 42560 BASE CODE: 420AR

MAJ CMD	USING AGCY	TYPE INSTL	STATUS	KIND CD	NAME	OPERATOR CD	NAME	FUNCTION CD	NAME	NEAREST CITY NAME	DIST	DR	COUNTY SUBDIVISION	POLITICAL ST	YEAR ACQ	RURAL URBAN
S	SM	T	A	ACTIVE	NON-INDUSTRIAL	V	RESERVE CENTERS			WILKES BARRE	001	N	LUZERNE	PA	1955	U

CAT CD/ DESC	BLDG/ FACNO	UM 1	AREA TOTAL	AREA OUTGRANT	VACANT AREA	UM 2	OTHER MEAS (TOT CAP)	COST TO GOVT(00)	IMPRV COST(00)	ESTIMATE VAL(000)
851 ROADS										
85110	77800	SY	368.00			MI	.1		18	
ROADS, SURFACED	TYPE CONS: P	OWN CD: 1	USG CD: S	DISP CD:	COND CD: B	YEAR BLT: 1955	#FL:	WALL MATL CD:	BRKS:	
SUBTOTS: BLDG STRUCT										
CONST P:	1	SY	368.00			MI	.1		18	
OWN 1:	1	SY	368.00			MI	.1		18	
CAT 851:	1	SY	368.00			MI	.1		18	
852 SDWLKS/OTH PVM										
85210	77806	SY	3625.00						165	
ORG PARK SURFAC	TYPE CONS: P	OWN CD: 1	USG CD: S	DISP CD:	COND CD: B	YEAR BLT: 1959	#FL:	WALL MATL CD:	BRKS:	
85220	77809	SY	281.00						15	
SIDEWALKS SURFA	TYPE CONS: P	OWN CD: 1	USG CD: S	DISP CD:	COND CD: B	YEAR BLT: 1955	#FL:	WALL MATL CD:	BRKS:	
SUBTOTS: BLDG STRUCT										
CONST P:	2	SY	3906.00						180	
OWN 1:	2	SY	3906.00						180	
CAT 852:	2	SY	3906.00						180	
872 FENCING/GATES										
87210	77863					LF	418.0		22	
FENCING/WALLS	TYPE CONS: P	OWN CD: 1	USG CD: S	DISP CD:	COND CD: B	YEAR BLT: 1959	#FL:	WALL MATL CD:	BRKS:	
SUBTOTS: BLDG STRUCT										
CONST P:	1					LF	418.0		22	
OWN 1:	1					LF	418.0		22	

CAT 872: 1 LF 418.0 22

911 LAND PUR/CON/D

91110 77013 AC 4.00 445

LAND HELD PUR TYPE CONS: P OWN CD: 1 USG CD: DISP CD: COND CD: B YEAR BLT: 1955 #FL: WALL MATL CD: BRKS:

SUBTOTS: BLDG STRUCT

CONST P: AC 4.00 445

OWN 1: AC 4.00 445

CAT 911: AC 4.00 445

INVENTORY OF MILITARY REAL PROPERTY AS OF 09-OCT-2001 PCN AKJ-003

SUBINSTL NAME: WILKES-BARRIE USARC SUB INSTL NO: 42970 PRI INSTL NO: 42560 BASE CODE: 420AR

MAJ USING TYPE			----- STATUS KIND OPERATOR -----		---------- FUNCTION ----------		-----NEAREST CITY-----		COUNTY POLITICAL	YEAR RURAL
CMD	AGCY	INSTL	CD	NAME	CD	NAME	NAME	DIST DR	SUBDIVISION	ST ACQ URBAN
S	SM	T	A	ACTIVE NON-INDUSTRIAL	V	RESERVE CENTERS	WILKES BARRE	001 N	LUZERNE	PA 1955 U

CAT CD/ DESC	BLDG/ FACNO	UM 1	AREA TOTAL	AREA OUTGRANT	VACANT AREA	UM 2	OTHER MEAS (TOT CAP)	COST TO GOVT(00)	IMPRV COST(00)	ESTIMATE VAL(000)
INSTAL :	3	6						5568		

PERMAMENT BLDGS TOTAL	3
SEMI-PERM BLDGS TOTAL	0
TEMPORARY BLDGS TOTAL	0

	ARMY OWNED			NON-ARMY OWNED			TOTAL		
	AREA TOTAL	AREA OUTGRANT	AREA VACANT	AREA TOTAL	AREA OUTGRANT	AREA VACANT	AREA TOTAL	AREA OUTGRANT	AREA VACANT
SQ FEET :	25303.00	0.00	0.00	0.00	0.00	0.00	25303.00	0.00	0.00
SQ YARD :	4274.00	0.00	0.00	0.00	0.00	0.00	4274.00	0.00	0.00
ACRES :	4.00	0.00	0.00	0.00	0.00	0.00	4.00	0.00	0.00

END PAGE 00004

ENCLOSURE C

DEPARTMENT OF THE ARMY
UNITED STATES ARMY FACILITY ENGINEER GROUP
416TH ENGINEER COMMAND
TDA AUGMENTATION
10 South 100 Frontage Road
Darien, IL 60561-1780

REAL PROPERTY MAINTENANCE ACTIVITIES

For

WILKES-BARRE UNITED STATES ARMY RESERVE CENTER

Wilkes-Barre, Pennsylvania
Facility I.D. No. PA099

Date of Visit: 6-7 DECEMBER 2001

PREPARED BY:

FACILITY ENGINEER GROUP (416th ENCOM)
FACILITY ENGINEER CENTER - NORTHEAST

FORT INDIANTOWN GAP
FACILITY ENGINEERING TEAM
Annville, Pennsylvania

ENCLOSURE C

FACILITY ENGINEER GROUP
USAR FACILITY
ENGINEERING AND ENVIRONMENTAL
FACILITY ASSESSMENT

RPMA WORK REQUIREMENTS

INSTALLATION NAME: Wilkes-Barre United States Army Reserve Center

INSTALLATION NUMBER: PA099 DATE: 6-7 DEC 2001

TABLE OF CONTENTS

SECTION	DESCRIPTION
1.	EXECUTIVE SUMMARY
2.	FACILITY IDENTIFICATION
3.	COMPONENT INSPECTION SUMMARY
4.	OTHER ENGINEERING SERVICES REQUIREMENTS
5.	RPMA PROJECT DOCUMENTATION AND COST ESTIMATES
6.	WORK ORDERS (ANNOTATED)

ENCLOSURE C

SECTION 1 - EXECUTIVE SUMMARY

INSTALLATION NAME: WILKES-BARRE USAR CENTER
INSTALLATION NUMBER: PA099 DATE: 6-7 DECEMBER 2001

1. On 6-7 December 2001, the Ft. Indiantown Gap Facility Engineer Team (Team) conducted an Engineering and Environmental Facility Assessment (E2FA) for the Wilkes-Barre United States Army Reserve (USAR) Center located in Wilkes-Barre, Pennsylvania. The USAR Center consists of a two story concrete-block constructed building (approximately 23,709 gross square feet) with a separate similarly constructed OMS (approximately 3,905 gross square feet). Besides the two buildings, there is four privately owned vehicle (POV) parking areas and a fenced military equipment parking (MEP) area. The facility was constructed in 1952. The center is surrounded by commercial property on all sides. The facility is occupied by the following units:

UNIT	**Assigned Strength**	**Authorized Strength**
828th Quartermaster	82	69
3rd of the 80th Training Division	60	63

2. Since its construction in 1952, there have been several system upgrades/replacements, including; energy efficient windows, heating system, suspended ceiling grid, tile, and fluorescent lights, new exterior doors and façade, and new floor tiles. The OMS has recently been painted, both inside and outside, energy efficient windows have been installed and a new heating system installed. The main building heating system is natural gas hot water baseboard in the unit areas and two gas-fired infrared heaters in the assembly hall. An overhead gas-fired infrared heater heats the OMS.

3. Real Property Maintenance: The main building is constructed of concrete masonry unit (CMU) interior walls covered by a stucco veneer exterior walls with concrete floors. The OMS consists of CMU interior walls and brick veneer exterior walls with a concrete floor. The overall condition of the facility is very good. Most of the major building components have been well maintained or recently upgraded/replaced. The roofing system is in good condition and does not need replaced. Interior renovation and painting is desperately needed in the restrooms. The exterior brick veneer of the OMS needs to have several bricks replaced and the mortar re-pointed. A comprehensive asbestos survey is required NOW. Suspect asbestos material is present in the 9-inch by 9-inch floor tiles under the new flooring. Bollards need to be installed in the MEP to protect the OMS corners and entrances into the shop area. Bollards must also be installed around the fire hydrant located in the parking area of the MEP, in addition to around the incoming natural gas line and meter, as well as the corner of the USAR Center, which are both part of the MEP. Very few minor deficiencies were noted, as the facility is well maintained and very presentable.

4. During the site visit, the assessment team reviewed current work orders, a summary of the RISER report, was nor provided during this site visit. The work orders have been annotated to reflect item validity and to adjust the estimated costs, resulting in a revised a total estimated cost of $264,500.50. Additional new RPMA work estimated at $169,900 was identified during the assessment. All real property maintenance information is contained in Enclosure C.

5. Mr. John Yolanda and SFC Dan Claussen were extremely helpful and cooperated in assisting the team with this visit. Their dedication and professionalism greatly simplified our team's ability to accomplish the mission.

J-B Chadwick
MAJ, EN, USAR
Mechanical Engineer, FIG FET

SECTION 2: FACILITY IDENTIFICATION

INSTALLATION NAME: WILKES-BARRE UNITED STATES ARMY RESERVE CENTER

INSTALLATION NUMBER: PA099

STREET ADDRESS: 1001 Highway 315 South
CITY/TOWN: Wilkes-Barre
STATE: PA
ZIP CODE: 18701-6926
RSC/RSG: 99th RSC
FACILITY TYPE:

A. USARC:	X	B. AFRC:	___	C. OMS:	X	D. FLIGHT:	___
E. DS/GS:	___	F. MED:	___	G. WET:	___	H. FLIGHT:	___
I. ECS:	___	J. CTF:	___	K. OTHER:			

ASSESSMENT PERFORMED BY: Ft. Indiantown Gap FET
FACILITY ENGINEER TEAM INCLUDED:

MAJ J-B Chadwick
SFC Kilpatrick

REFER TO FOR INFORMATION: MAJ J-B Chadwick

Work: (732) 225-6040 Home: (215) 547-2827

PERSONNEL CONTACTED ON SITE:

NAME/GRADE	DUTY POSITION	PHONE NUMBER	E-MAIL
Mr. John Yando	Facility Manager	(888) 249-8365	
SFC Dan Claussen	Facility Coordinator	(215) 443-1750	daniel.claussen@usarc-emh2.army.mil

ASSESSMENT CONDUCTED FROM: 6 December 2001/1000 TO: 7 December 2001/1400

DATE OF LAST ASSESSMENT: 22-23 APR 1997

SECTION 3: COMPONENT INSPECTION SUMMARY

INSTALLATION NAME: Wilkes-Barre USAR Center, Wilkes Barre, PA
INSTALLATION NUMBER: PA099

A Facility Condition Survey was conducted to assessment the current condition of the facility. The survey is used to develop a Long-Range Maintenance Plan. See Enclosure B.

A Component Inspection Summary is provided in the following table that summarizes the results of the Facility Condition Survey. The definition of the condition codes are as follows:

C1	Item is generally in good condition and requires only routine maintenance and repair.
C2	Item shows signs of partial failure of system components and needs maintenance, repair, or replacement.
C3	Item shows signs of extensive or complete failure of system components or system and needs immediate maintenance, repair, or replacement.

Component Inspection Summary: PA099

Item No.	Facility Component	Cond Code	Date of Component Installation	Date of Last Maint/ Repair	Est'd Remain Life, years	Projected FY of Repair	Cost of Work Estimate	Work Order Number
1	Ceilings (OMS only)	C2	1952		20		$14,941.25	PA099-01
2	Walls	C1	1952		20			
3	Doors (OMS only)	C2	1952		35		$23,750.00	PA099-02
4	Floors	C2	2000	2000	20			
5	Windows	C1	1997	2000	20			
6	Stairs	C1	1952					
7	Latrines	C2	1952		5		$150,000.00	U4012TC49P
8	Kitchen	C1	1952		20		$6,737.00	PA099-03
9	Electrical	C2	1952		10		$60,000.00	U4012TC39P
10	Plumbing	C1	1997		20			
11	Heating Sys	C1	1997		20			
12	Cooling Sys	N/A			20		~~$250,000~~	~~U4012TC19P~~
13	Site/Grounds	C1	1997		50			
14	Bldg Exterior (OMS only)	C2	1952		10		$2,500 $2,500	None None
15	Roof (Gutters/ Downspouts)	C1 C1	2000		10 10			
16	Fencing	C2	1997		10			
17	Pavement	C2	1997		20			
18	Security Sys	N/A					$4,500	U40120161P
19	Other	NA					$50,000 $25,906.25 $10,276.88 $13,200.00	U4012TC69P PA099-04 PA099-05 PA099-06
Total Cost							$364,311.88	

C1 Item is generally in good condition and requires only routine maintenance and repair.
C2 Item shows signs of partial failure of system components and needs maintenance, repair, or replacement.
C3 Item shows signs of extensive or complete failure of system components or system and needs immediate maintenance, repair, or replacement.

SECTION 4. SUMMARY OF UNCONSTRAINED WORK REQUIREMENTS

INSTALLATION NAME: Wilkes-Barre USAR Center, Wilke-Barre, Pennsylvania
INSTALLATION NUMBER: PA009 DATE: 31 MAY – 1 JUN 2001

	ESTIMATED COST
PREVIOUSLY IDENTIFIED MAINTENANCE AND REPAIR	**$264,500.50**
NEWLY IDENTIFIED MAINTENANCE AND REPAIR	**$169,900**
PREVIOUSLY IDENTIFIED MINOR CONSTRUCTION/ALTERATION	
NEWLY IDENTIFIED MINOR CONSTRUCTION/ALTERATION	**0**
PREVIOUSLY IDENTIFIED OTHER ENGINEERING SERVICES	**0**
NEWLY IDENTIFIED OTHER ENGINEERING SERVICES	**0**
TOTAL UNCONSTRAINED RPMA REQUIREMENTS	**$434,400.50**

SECTION 5: RPMA DOCUMENTATION AND COST ESTIMATES

Work Order Number	Description	Cost Estimate
PA099-01	Install new ceiling and lights in OMS	$14,941.25
PA099-02	Remove and replace OMS roll up doors	$23,750
PA099-03	Install fume hood/fire suppression system over stove	$6,737
PA099-04	Install Oil water separator, floor drains, and sewer line	$25,906.25
PA099-05	Install protection Bollards	$10,276.88
PA099-06	Install Lift in OMS	$83,287
None	Replace damaged cinderblocks on OMS	$2,500
None	Install lightning rods and grounding cables on OMS.	$2,500
	TOTAL NEWLY IDENTIFIED WORK	**$169,900**

Notes:

1. Cost estimates are provided for individual work tasks estimated to be more than $2,500. No cost estimates are provided for work tasks less than $2,500, which should be executed via the Government Impact credit card.

All locations are the main building unless noted otherwise.

1. COST ESTIMATE NUMBER: PA099-01

TYPE PROJECT: New Work __ Repair _X__ Maintenance ___ EIP ___ Other *(specify)*
RECOMMENDED METHOD OF ACCOMPLISHMENT:
DESIGN: A/E Contract ___ 416th ENCOM ___ Not Required _X_ Other
CONSTRUCTION: Contract __X__ Local Purchase __ Self Help/Troop
SDEH In-House ___ Other _____

SHORT JOB DESCRIPTION: Install ceiling and lights in OMS.

DESCRIPTION OF WORK: DETAILED COST ESTIMATE: (SHEET _1_ OF _1_)

ITEM	Unit	QTY	UNIT COST	TOTAL COST
Setup and secure Scaffold	C.S.F.*	37	$24	$888.00
Install gypsum drywall ceiling	C.S.F.	37	$161	$5,967.00
Install lighting	Ea.	40	$105.25	$4,210.00
Remove Scaffold	C.S.F.	37	$24	$888.00
Sub Total:				$11,953.00
OVERHEAD & PROFIT (25%)				$2988.25
PROJECT TOTAL:				$6,737.25
CONTINGENCY (0%)				0
TOTAL REQUEST				$14,941.25

* C.S.F. means 100 square feet
Estimates are: _X_ Current Year / FY_02__ Dollars
Prepared By: MAJ Chadwick
Date Prepared: 02 FEB 02

2. COST ESTIMATE NUMBER: PA099-02

TYPE PROJECT: New Work __ Repair _X_ Maintenance ___ EIP __ Other *(specify)*
RECOMMENDED METHOD OF ACCOMPLISHMENT:
DESIGN: A/E Contract ___ 416th ENCOM ___ Not Required _X_ Other
CONSTRUCTION: Contract __X__ Local Purchase __ Self Help/Troop
SDEH In-House __ Other _____

SHORT JOB DESCRIPTION: Remove and replace roll up doors in the OMS.

DESCRIPTION OF WORK: DETAILED COST ESTIMATE: (SHEET _1_ OF _1_)

ITEM	Unit	QTY	UNIT COST	TOTAL COST
Remove Overhead type door	Ea.	4	$400.00	$1,600
Install new door	Ea	4	$4,350.00	$17,400
Sub Total:				$19,000
OVERHEAD & PROFIT (25%)				$4,750
PROJECT TOTAL:				$23,750
CONTINGENCY (0%)				0
TOTAL REQUEST				$23,750

Estimates are:_X_ Current Year / FY_02__ Dollars
Prepared By: MAJ Chadwick
Date Prepared: 02 FEB 02

3. COST ESTIMATE NUMBER: PA099-03

TYPE PROJECT: New Work _X_ Repair ___ Maintenance ___ EIP ___ Other *(specify)*
RECOMMENDED METHOD OF ACCOMPLISHMENT:
DESIGN: A/E Contract ___ 416th ENCOM ___ Not Required _X_ Other
CONSTRUCTION: Contract __X__ Local Purchase ___ Self Help/Troop
SDEH In-House ___ Other _____

SHORT JOB DESCRIPTION: Install fume hood and fire suppression system over stove in kitchen area.

DESCRIPTION OF WORK: DETAILED COST ESTIMATE: (SHEET _1_ OF _1_)

ITEM	Unit	QTY	UNIT COST	TOTAL COST
Install duct work	LF	10	$6.48	$64.80
Install fume hood	Ea.	1	$1,500	$1,500
Install roof cap and motor	Ea.	1	$2,325	$2,325
Install fire suppression system	Ea.	1	1,500	$1,500
Sub Total:				$5,389.80
OVERHEAD & PROFIT (25%)				$1,347.45
PROJECT TOTAL:				$6,737.25
CONTINGENCY (0%)				0
TOTAL REQUEST				$6,737.25

Estimates are:_X_ Current Year / FY_02__ Dollars
Prepared By: MAJ Chadwick
Date Prepared: 02 FEB 02

4. COST ESTIMATE NUMBER: PA099-04

TYPE PROJECT: New Work _X_ Repair ___ Maintenance ___ EIP ___ Other *(specify)*
RECOMMENDED METHOD OF ACCOMPLISHMENT:
DESIGN: A/E Contract ___ 416th ENCOM ___ Not Required _X_ Other
CONSTRUCTION: Contract __X__ Local Purchase ___ Self Help/Troop
SDEH In-House ___ Other _____

SHORT JOB DESCRIPTION: Install an oil/water separator to wash rack, floor drains in OMS, and connected to sanitary sewer.

DESCRIPTION OF WORK: DETAILED COST ESTIMATE: (SHEET _1_ OF _1_)

ITEM	Unit	QTY	UNIT COST	TOTAL COST
Install new oil water separator	Ea.	18	3,750	$3,750
Upgrade wash rack	LS	1	5,000	$5,000
Install sewer line and floor drains	LF	300	30.00	$9,000
Install paving access ramps and repair OMS floor	SY	350	8.50	$2,975
Sub Total:				$20,725
OVERHEAD & PROFIT (25%)				$5,181.25
PROJECT TOTAL:				$25,906.25
CONTINGENCY (0%)				0
TOTAL REQUEST				$25,906.25

Estimates are:_X_ Current Year / FY_01__ Dollars
Prepared By: MAJ Chadwick
Date Prepared: 02 FEB 02

5. COST ESTIMATE NUMBER: PA007-05

TYPE PROJECT: New Work _X_ Repair ___ Maintenance ___ EIP ___ Other *(specify)*
RECOMMENDED METHOD OF ACCOMPLISHMENT:
DESIGN: A/E Contract ___ 416th ENCOM ___ Not Required _X_ Other
CONSTRUCTION: Contract __X__ Local Purchase __ Self Help/Troop
SDEH In-House __ Other _____

SHORT JOB DESCRIPTION: Install Protection Bollards in MEP

DESCRIPTION OF WORK: DETAILED COST ESTIMATE: (SHEET _1_ OF _1_)

ITEM	UM	QTY	UNIT COST	TOTAL COST
Cut existing asphalt or concrete	Ea	18	$73.00	$1,314.00
Excavate by hand	Ea	18	$155	$2,790.00
Install Protection Bollard	Ea	18	$16.25	$292.50
Backfill excavation	Ea	18	$155	$2,790.00
Patch Asphalt	Ea	18	$57.50	$1,035.00
Sub Total:				$8,221.50
OVERHEAD & PROFIT (25%)				$2055.38
PROJECT TOTAL:				$10,276.88
CONTINGENCY (0%)				0
TOTAL REQUEST				$10,276.88

Estimates are: _X_ Current Year / FY_01__ Dollars
Prepared By: MAJ Chadwick
Date Prepared: 13 JUL 2001

6. COST ESTIMATE NUMBER: PA007-06

TYPE PROJECT: New Work _X_ Repair ___ Maintenance ___ EIP ___ Other *(specify)*
RECOMMENDED METHOD OF ACCOMPLISHMENT:
DESIGN: A/E Contract ___ 416th ENCOM ___ Not Required _X_ Other
CONSTRUCTION: Contract __X__ Local Purchase ___ Self Help/Troop
SDEH In-House ___ Other _____

SHORT JOB DESCRIPTION: Install Lift in OMS

DESCRIPTION OF WORK: DETAILED COST ESTIMATE: (SHEET _1_ OF _1_)

ITEM	UM	QTY	UNIT COST	TOTAL COST
Install hydraulic lift in OMS (75,000 lbs.)	Ea	1	$66,630	$66,630
Sub Total:				$66,630
OVERHEAD & PROFIT (25%)				$16,657
PROJECT TOTAL:				$83,287.00
CONTINGENCY (0%)				0
TOTAL REQUEST				$83,287.00

Estimates are:_X_ Current Year / FY_01__ Dollars
Prepared By: MAJ Chadwick
Date Prepared: 13 JUL 2001

SECTION 6: WORK ORDERS REPORT (ANNOTATED)

USAR FACILITIES SUPPORT REQUEST

PART A (To be completed by requestor)	REQUESTOR ID CODE	REQUEST SERIAL NUMBER	FY	TYPE	SHORT DESCRIPTION OF REQUIREMENT (PRINT)	DATE INITIATED YR	MO	DA
	U40	12TC3	9	P	REPAIR ELEC SYS/EXT LITES	99	05	03

FACILITY ID CODE	BUILDING/FACILITY NUMBERS 1	2	3	4	5	6	7	8	9	10
PA099										

FACILITY NAME	POC NAME	POC PHONE NUMBER
WILKES-BARRIE USARC	SAL ZANGARI	6109749601

DESCRIPTION OF REQUIREMENT:
Repair Elec Sys/Ext Lites

JUSTIFICATION FOR REQUIREMENT:
Bring bldg to current acceptable standards by Army Regulation.

SAL ZANGARI — AUTHORIZED REQUESTOR: (Type or Print)
6109749601 — Phone
SIGNATURE

PART B (To be completed by Regional Engineer Approving Official Only)

APPROVAL ACTION CODE: W
REQUIREMENT TYPE: OTR
APPROPRIATION: OMAR
PROGRAM INDICATOR CODE: X
SPECIAL INTEREST CODE: ELEC
DATE OF APPROVAL: YR MO DA

REMARKS:

ENVIRONMENTAL IMPACT YES	NO		WORK TO BE PERFORMED	WORK CLASS (AMSCO)	ESTIMATED COSTS Funded	Unfunded	SOURCE OF FUNDS
☐	☐	ENVIRONMENTAL CONSIDERATION	☐ DPW	K	$	$ $60,000	☐ DIRECT
☐	☐	EIS/EIA INITIATED	☐ SELF HELP		$	$	☐ AUTOMATIC REIMBURSEMENT
☐	☐	EIS/EIA COMPLETED	☐ CONTRACT		$	$	☐ FUNDED REIMBURSEMENT
			☐ TROOP		$	$	
			☐ OTHER	Total:	$	$ $60,000	OTHER FUND CITATION
			COMMENTS:				

APPROVAL FOR DESIGN	DATE YR	MO	DA	PROJECT APPROVAL AUTHORITY	APPROVAL ACTION	DATE YR	MO	DA
(Please type or print name)				(Please type or print name)	☐ APPROVED			
(Signature)				(Signature)	☐ DISAPPROVED			

FORM 4283

Date of Printing : 2001/11/30

USAR FACILITIES SUPPORT REQUEST

SHORT DESCRIPTION OF REQUIREMENT (PRINT)

PART A (To be completed by requestor)	REQUESTOR ID CODE	REQUEST SERIAL NUMBER	FY	TYPE	SHORT DESCRIPTION OF REQUIREMENT (PRINT)	DATE INITIATED YR	MO	DA
	U40	12TC4	9	P	REPAIR BATHROOMS	99	05	03

FACILITY ID CODE	BUILDING/FACILITY NUMBERS 1	2	3	4	5	6	7	8	9	10
PA099										

FACILITY NAME	POC NAME	POC PHONE NUMBER
WILKES-BARRIE USARC	SAL ZANGARI	6109749601

DESCRIPTION OF REQUIREMENT:
Repair Bathrooms

JUSTIFICATION FOR REQUIREMENT:
Bring bldg to current acceptable standards by Army Regulation.

SAL ZANGARI — AUTHORIZED REQUESTOR: (Type or Print)
6109749601 — Phone
SIGNATURE

PART B
(To be completed by Regional Engineer Approving Official Only)

APPROVAL ACTION CODE: W
REQUIREMENT TYPE: OTR
APPROPRIATION: OMAR
PROGRAM INDICATOR CODE: X
SPECIAL INTEREST CODE: OTHR
DATE OF APPROVAL: YR / MO / DA

REMARKS:

ENVIRONMENTAL IMPACT YES	NO		WORK TO BE PERFORMED	WORK CLASS (AMSCO)	ESTIMATED COSTS Funded	Unfunded	SOURCE OF FUNDS
☐	☐	ENVIRONMENTAL CONSIDERATION	☐ DPW	K	$	$ $150,000	☐ DIRECT
☐	☐	EIS/EIA INITIATED	☐ SELF HELP		$	$	☐ AUTOMATIC REIMBURSEMENT
☐	☐	EIS/EIA COMPLETED	☐ CONTRACT		$	$	☐ FUNDED REIMBURSEMENT
			☐ TROOP		$	$	
			☐ OTHER		$	$	OTHER FUND CITATION
			COMMENTS:	Total:	$	$ $150,000	

APPROVAL FOR DESIGN	DATE YR	MO	DA	PROJECT APPROVAL AUTHORITY	APPROVAL ACTION	DATE YR	MO	DA
(Please type or print name)				(Please type or print name)	☐ APPROVED			
(Signature)				(Signature)	☐ DISAPPROVED			

FORM 4283

Date of Printing : 2001/11/30

USAR FACILITIES SUPPORT REQUEST

PART A (To be completed by requestor)	REQUESTOR ID CODE	REQUEST SERIAL NUMBER	FY	TYPE	SHORT DESCRIPTION OF REQUIREMENT (PRINT)	DATE INITIATED YR	MO	DA
	U40	12TC6	9	P	REPAIR UTILITY LINE TO PROP	99	05	03

FACILITY ID CODE	BUILDING/FACILITY NUMBERS 1	2	3	4	5	6	7	8	9	10
PA099										

FACILITY NAME	POC NAME	POC PHONE NUMBER
WILKES-BARRIE USARC	SAL ZANGARI	6109749601

DESCRIPTION OF REQUIREMENT:
Repair Utility Line to Prop

JUSTIFICATION FOR REQUIREMENT:
Bring bldg to current acceptable standards by Army Regulation.

SAL ZANGARI — AUTHORIZED REQUESTOR: (Type or Print)
6109749601 — Phone
SIGNATURE

PART B (To be completed by Regional Engineer Approving Official Only)

APPROVAL ACTION CODE: W
REQUIREMENT TYPE: OTR
APPROPRIATION: OMAR
PROGRAM INDICATOR CODE: X
SPECIAL INTEREST CODE: UTIL
DATE OF APPROVAL: YR / MO / DA

REMARKS:

ENVIRONMENTAL IMPACT YES	NO		WORK TO BE PERFORMED	WORK CLASS (AMSCO)	ESTIMATED COSTS Funded	Unfunded	SOURCE OF FUNDS
☐	☐	ENVIRONMENTAL CONSIDERATION	☐ DPW	K	$	$ $50,000	☐ DIRECT
☐	☐	EIS/EIA INITIATED	☐ SELF HELP		$	$	☐ AUTOMATIC REIMBURSEMENT
☐	☐	EIS/EIA COMPLETED	☐ CONTRACT		$	$	☐ FUNDED REIMBURSEMENT
			☐ TROOP		$	$	
			☐ OTHER	Total:	$	$ $50,000	OTHER FUND CITATION

COMMENTS:

APPROVAL FOR DESIGN	DATE YR	MO	DA	PROJECT APPROVAL AUTHORITY	APPROVAL ACTION	DATE YR	MO	DA
(Please type or print name)				(Please type or print name)	☐ APPROVED			
(Signature)				(Signature)	☐ DISAPPROVED			

FORM 4283

Date of Printing : 2001/11/30

USAR FACILITIES SUPPORT REQUEST

PART A (To be completed by requestor)	REQUESTOR ID CODE	REQUEST SERIAL NUMBER	FY	TYPE	SHORT DESCRIPTION OF REQUIREMENT (PRINT)	DATE INITIATED YR	MO	DA
	U40	12TC1	9	P	REPAIR HVAC	99	05	03

FACILITY ID CODE	BUILDING/FACILITY NUMBERS 1	2	3	4	5	6	7	8	9	10
PA099										

FACILITY NAME	POC NAME	POC PHONE NUMBER
WILKES-BARRIE USARC	SAL ZANGARI	6109749601

DESCRIPTION OF REQUIREMENT:

Repair HVAC. Replace boilers, chillers and compressors. Install new components and controls as necessary.

Air Conditioning is not required for the entire facility. Window air conditioning units can be installed if absolutely required in areas where full time staff occupy the building.

JUSTIFICATION FOR REQUIREMENT:

Bring bldg to current acceptable standards by Army Regulation. Hvac is over 20 yrs old.

Heating System has been recently upgraded.

SAL ZANGARI — AUTHORIZED REQUESTOR: (Type or Print)

6109749601 — Phone

SIGNATURE

PART B (To be completed by Regional Engineer Approving Official Only)

APPROVAL ACTION CODE: W

REQUIREMENT TYPE: OTR

APPROPRIATION: OMAR

PROGRAM INDICATOR CODE: X

SPECIAL INTEREST CODE: ENRG

DATE OF APPROVAL: YR / MO / DA

REMARKS:

ENVIRONMENTAL IMPACT YES	NO		WORK TO BE PERFORMED	WORK CLASS (AMSCO)	ESTIMATED COSTS Funded	Unfunded	SOURCE OF FUNDS
☐	☐	ENVIRONMENTAL CONSIDERATION	☐ DPW	K	$	$250,000	☐ DIRECT
☐	☐	EIS/EIA INITIATED	☐ SELF HELP		$	$ ~~$2,500~~	☐ AUTOMATIC REIMBURSEMENT
☐	☐	EIS/EIA COMPLETED	☐ CONTRACT		$	$	☐ FUNDED REIMBURSEMENT
			☐ TROOP		$	$	
			☐ OTHER		$	$	OTHER FUND CITATION
			COMMENTS:	Total:	$	$250,000	

APPROVAL FOR DESIGN	DATE YR	MO	DA	PROJECT APPROVAL AUTHORITY	APPROVAL ACTION	DATE YR	MO	DA
(Please type or print name)				(Please type or print name)	☐ APPROVED			
(Signature)				(Signature)	☐ DISAPPROVED			

FORM 4283

Date of Printing : 2001/11/30

USAR FACILITIES SUPPORT REQUEST

PART A (To be completed by requestor)	REQUESTOR ID CODE	REQUEST SERIAL NUMBER	FY	TYPE	SHORT DESCRIPTION OF REQUIREMENT (PRINT)	DATE INITIATED YR	MO	DA
	U 4 0	1 2 0 1 6	1	P	INSTALL ELEC CONTROL ENTRY SYS	0 1	0 3	1 6

FACILITY ID CODE	BUILDING/FACILITY NUMBERS 1	2	3	4	5	6	7	8	9	10
P A 0 9 9										

FACILITY NAME	POC NAME	POC PHONE NUMBER
WILKES-BARRIE USARC	SAL ZANGARI	6 1 0 9 7 4 9 6 0 1

DESCRIPTION OF REQUIREMENT:
INSTALL ELECTRONIC CONTROL ENTRY SYSTEM

JUSTIFICATION FOR REQUIREMENT:
SECURITY

SAL ZANGARI — AUTHORIZED REQUESTOR: (Type or Print)
6109749601 — Phone
SIGNATURE

PART B
(To be completed by Regional Engineer Approving Official Only)

APPROVAL ACTION CODE: W
REQUIREMENT TYPE: O T R
APPROPRIATION: O M A R

PROGRAM INDICATOR CODE: T
SPECIAL INTEREST CODE: C S U P
DATE OF APPROVAL: YR MO DA

REMARKS:

ENVIRONMENTAL IMPACT YES	NO	
☐	☐	ENVIRONMENTAL CONSIDERATION
☐	☐	EIS/EIA INITIATED
☐	☐	EIS/EIA COMPLETED

WORK TO BE PERFORMED
☐ DPW
☐ SELF HELP
☐ CONTRACT
☐ TROOP
☐ OTHER
COMMENTS:

WORK CLASS (AMSCO)	ESTIMATED COSTS Funded	Unfunded
L	$	$ $4,500
	$	$
	$	$
	$	$
Total:	$	$ $4,500

SOURCE OF FUNDS
☐ DIRECT
☐ AUTOMATIC REIMBURSEMENT
☐ FUNDED REIMBURSEMENT

OTHER FUND CITATION

APPROVAL FOR DESIGN	DATE YR	MO	DA	PROJECT APPROVAL AUTHORITY	APPROVAL ACTION	DATE YR	MO	DA
(Please type or print name)				(Please type or print name)	☐ APPROVED			
(Signature)				(Signature)	☐ DISAPPROVED			

FORM 4283

Date of Printing : 2001/11/30

ENCLOSURE D

DEPARTMENT OF THE ARMY
HEADQUARTERS, U.S. ARMY FACILITY ENGINEER GROUP (FEG)
10 S 100 South Frontage Road
Darien, IL 60561-1780

ARMS VAULT FACILITY STRUCTURAL CERTIFICATION

For

WILKES-BARRE UNITED STATES ARMY RESERVE CENTER

Wilkes-Barre, Pennsylvania
Facility I.D. No. PA099

Date of Visit: 6-7 December 2001

PREPARED BY:

U.S. ARMY FACILITY ENGINEER GROUP (FEG)
FACILITY ENGINEER CENTER - NORTHEAST

FORT INDIANTOWN GAP
FACILITY ENGINEER TEAM
Annville, Pennsylvania

SECTION 1: FACILITY IDENTIFICATION

INSTALLATION NAME: Wilkes-Barre USAR Center

INSTALLATION NUMBER: PA099 DATE: 7 December 2001

STREET ADDRESS: 1001 Highway 315 South
CITY/TOWN: Wilkes-Barre
STATE: Pennsylvania
ZIP CODE: 18701-6926

RSC/RSG: 99TH RSC; Oakdale, Pennsylvania

FACILITY TYPE:

A. USARC:	X	B. AFRC:	___	C. OMS:	X	D. FLIGHT:	___
E. DS/GS:	___	F. MED:	___	G. WET:	___	H. FLIGHT:	___
I. ECS:	___	J. CTF:	___	K. OTHER:	___		

ASSESSMENT PERFORMED BY: Fort Indiantown Gap FET

FACILITY ENGINEER TEAM INCLUDED:

MAJ JB Chadwick
SFC James Kilpatrick

REFER TO FOR INFORMATION: MAJ JB Chadwick
1976 Fischer Ave
Ft. Indiantown Gap
Annville, PA 17003
732-225-6040 (work phone)

PERSONNEL CONTACTED ON SITE:

NAME/GRADE	DUTY POSITION	PHONE NUMBER	E-MAIL
Mr. John Yonda	Facility Coordinator	(888)-249-8365	

ASSESSMENT CONDUCTED FROM: 6-7 DEC 2001

DATE OF LAST ASSESSMENT: 22-23 APR 1997

ENCLOSURE D

NOTE: (INSERT ARMS VAULT SECURITY CONSTRUTION STATEMENT MEMO)

DEPARTMENT OF THE ARMY
416TH ENGINEER COMMAND
ENGINEER SUPPORT GROUP - EAST
FORT INDIANTOWN GAP TEAM
FORT MEADE, MARYLAND 20755-5116

AFRC-ENIL-FE-E 1 June 2001

MEMORANDUM FOR: Mr. John Yando
1001 Highway 315 South.
Wilkes-Barre, PA 18701-6926

SUBJECT: Arms Vault Security Construction Statement

1. Enclosed for your information are two copies of DA Form 4604-R (Security Construction Statement) for the Arms Vault, which is required to be posted inside the vault. The facility is not in compliance with AR 190-11 dated 12 February 1998. The tumbler mechanism in the vault door must be repaired or replaced.

2. Once the tumbler mechanism has been repaired, the arms vault must be re-evaluated for compliance with AR 190-11 dated 12 February 1998.

2. One of the copies should be kept in the unit administrator's permanent files in the U.S. Army Reserve Center. The other copy should be mounted to either the interior wall of the arms vault or the interior vault door surface.

3. The DA Form 4604-R shall be reviewed during physical security surveys and inspections and revalidated by engineer personnel every five years as per paragraph 2-2d of AR 190-11.

4. Point of contact for this action is MAJ Chadwick, telephone: (732)-225-6040 ext 233 (work).

Encl

J-B Chadwick
MAJ, EN, USAR
Mechanical Engineer

CF: Director, 416th ENCOM, Engineer Support Group-East, Building 8543,
ATTN: AFRC-ENIL-FE-E, Fort Meade, MD, 20755-5116
99th RSC Provost Marshal's Office, 5 Lobaugh Street, Oakdale, PA 15071

SECURITY CONSTRUCTION STATEMENT

For use of this form, see AR 190-11; the proponent agency is ODCSOPS

INSTRUCTIONS

This form will be prepared in three copies. The original will be maintained permanently in the files of the individual signing the form. The first copy will be maintained in the using unit/organizational files. The second copy will be filed permanently in the arms/ammunition storage facility. All entries except item 7 will be typed written.

1. THE CONSTRUCTION OF THIS FACILITY CONFORMS TO THE CRITERIA OF AR 190-11 WHICH IS IN EFFECT ON THIS DATE EXCEPT AS INDICATED HEREON

IAW Paragraph 2.2.d of AR 190-11 dated 12 February 1998, the undersigned conducted a visual revalidation inspection of the arms vault. The arms vault of this facility does not meet the construction standards for Category II storage of arms, ammunition, and explosives.

The IDS of this facility meets the acceptable standards as outlined in Paragraph 3.6.a of AR 190-11, dated 12 February 1998.

Structural drawings were not available for review at the facility.

Equipment to determine concealed reinforcement size and spacing has not been provided to this unit conducting the inspection.

2. ROOM AND BUILDING NUMBER, STREET AND INSTALLATION ADDRESS

Arms Vault Wilkes-Barre USAR Center
1001 Highway 315 South
Wilkes-Barre, PA 18701-6926

3. THIS APPLIES TO

a. ☒ AN EXISTING STRUCTURE
b. ☐ CONSTRUCTION OF NEW FACILITY
c. ☐ MODIFICATION OF EXISTING FACILITY *(Explain)*

4. NAME OF OFFICIAL SIGNING IN ITEM 7 BELOW	GRADE	6. ADDRESS OF OFFICIAL
J-B Chadwick MAJ, EN, USAR	O-4	1976 Fischer Ave Ft. Indiantown Gap Annville, PA 17003
5. ORGANIZATION FT INDIANTOWN GAP TEAM 416TH FACILITY ENGINEER COMMAND-NE		
7. SIGNATURE		DATE SIGNED 7 DEC 02

DA FORM 4604-R, 1 MAR 77

NOTE: (INSERT PREVIOUS DA FORM 4604-R SECURITY CONSTRUCTION STATEMENT HERE)

ENCLOSURE D

ARMS VAULT CERTIFICATION CHECK LIST
Existing Construction

FACILITY: Wilkes-Barre United States Army Reserves Center
1001 Highway 315 South
Wilkes-Barre, Pennsylvania 18701-6926

POINT OF CONTACT: Mr. John Yonda, Facility Coordinator
Phone Number: (888) 249-8365

FLOORS		YES	NO
1. **	6-inch concrete slab on grade reinforced with 6-inch by 6-inch 4.0/4.0 WWF minimum or the equivalent reinforcing steel bars.	X*	___
2. **	6-inch minimum thickness concrete slab reinforced with # 4 bars or larger forming a grid pattern that does not exceed 96 square inches (where the floor forms the ceiling of an underlying room or area).	___	___
3.	**6-inch minimum thickness reinforced concrete slab (either WWF or rebar, no minimum size reinforcement or minimum spacing of reinforcement specified).**	___	___

* NOTE: No Structural Drawings were available for review; however, standard construction is 6-8" thick slab on grade with WWF – 6" X 6" – W4 X W4 reinforcing on drill hall floors.

WALLS*			
1. **	8-inch thick reinforced concrete with # 4 bars at 9 inches on center in each direction (vertical & horizontal).	___	___
2. **	8-inch thick concrete masonry with # 4 bars threaded through concrete masonry unit cavities (no spacing specified). Cells of concrete masonry unit cavities are filled with mortar or concrete. Horizontal joint reinforcement is provided at each course.	X*	___
3.	**8-inch thick reinforced solid brick wall; or**	___	___
4.	**8-inch thick reinforced concrete masonry with cells of concrete masonry unit cavities filled with concrete (no minimum size reinforcing or spacing specified); or**	___	___
5.	**The walls are constructed of 12-inch thick non-reinforced solid brick masonry.**	___	___
6.	Other: Steel reinforced mesh on inside walls.	X	___

* NOTE: No Structural Drawings were available for review.

CEILING	YES	NO
1. ** 6-inch minimum thickness concrete slab reinforced with # 4 bars or larger forming a grid pattern that does not exceed 96 square inches.	X	

* NOTE: No Structural Drawings were available for review. Vault is of a standard pre-cast construction.

Note: Items shown in **Bold** typeface are minimum mandatory standards. If the YES column entry can not be checked or one of the better standards is not met, the vault is not in compliance with AR 190-11 dated 12 February 1998, and can not be certified for the storage of Category II and III arms and ammunition.

** Indicates new facility construction criteria which is better than existing structure criteria.

2. **6-inch minimum thickness reinforced concrete (no minimum size or minimum spacing of reinforcement specified).**		
3. Concrete Pan Joists: Thinnest portion of the joist not less than 6-inches and the clear space between joists does not exceed 20-inches.		

DOORS

1. GSA approved Class 5 steel door (Fed. Spec. AA-D-600B) with a built in 3 position, dial type, changeable combination lock used in lieu of the door described below (not required).	X*	
2. Day Gate provided (not required).	X	
3. Pass through window provided within Day Gate (not required).	X	
4. ** Door is 1-3/4 inch thick solid core wood or laminated wood with 12-gauge metal plate securely attached to the outside face.		
5. ** Door is 1-3/4 inch thick hollow, metal industrial type construction with minimum 14-gauge skin plate thickness, internally reinforced vertically with continuous steel stiffeners spaced 6-inches maximum on center.		
6. Two doors provided to arms vault. One door as described in E4 or E5 above. (Double door protection is not required).		
7. **Door is 1-3/4 inch thick solid core wood with wood block cores; or**		
8. **Door is 1-3/4 inch thick hollow type construction with minimum 16-gauge skin plate thickness.**		

*NOTE: Tumbler mechanism is ready to fail

DOORS AND HARDWARE

1. ** Door bucks, frames and keepers are rigidly anchored and provided with antispread space filler reinforced to prevent disengagement of the lock bolt by prying or jacking the doorframe.	X	
2. ** Frames and locks for interior and exterior doors are so designed and installed as to prevent sufficient removal of the frame facing or the built in locking mechanism to allow disengagement of the lock bolt from the outside when the door is closed and locked.	X	

E. DOORS AND HARDWARE con't	YES	NO
3. ** Door hinges are fixed pin security type. Exposed hinge pins will be pinned, spot welded or otherwise secured to prevent removal, and Hinge-mounting screws are not exposed to the outside of the arms vault (except for Class 5 steel vault door hinges).	X	
4. Doorframes will be a minimum of 16-gauge steel; and	X	
5. Door hinges shall not be exposed to the outside of the arms storage area and hinge pins shall be secured to prevent removal; and		
6. Doors shall be secured with authorized padlocks [KEYS].		

Note: Items shown in **Bold** typeface are minimum mandatory standards. If the YES column entry can not be checked or one of the better standards is not met, the vault is not in compliance with AR 190-11 dated 12 February 1998, and can not be certified for the storage of Category II and III arms and ammunition.

** Indicates new facility construction criteria which is better than existing structure criteria.

F. WINDOWS AND OTHER OPENINGS	YES	NO
1. No openings existing in walls or ceilings.	X	
2. ** **All openings greater than 96 square inches are protected by rod-and-bar grid as required in Appendix G-1.e.**		

G. ARMS ROOM ANCHOR RINGS	YES	NO
1. Anchor rings provided in arms room floor or walls to secure arms racks.	X	

H. INTRUSION DETECTION SYSTEM (IDS)	YES	NO
1. **Intrusion detection system provided for vaults as required in AR 190-11, to include two types of sensors, one of which must be a volumetric sensor; and**	X	
2. **Alarms at local law enforcement/contract security alarm monitoring station; and [Local Police] (ADT)**	X	
3. **Is there a sign (constructed in accordance with Appendix F, AR 190-11) announcing the presence of the IDS prominently displayed at eye level on the exterior of each interior wall that contains an entrance to the vault; and**	X	
4. **The vault is designated and posted as a restricted area in accordance with AR 190-13.**	X	

I. SECURITY LIGHTING	YES	NO
1. Entrance door to arms vault is illuminated by lighting, or, when the vault is located within another room, the entrance door to the room is illuminated.	X	

J. MECHANICAL	YES	NO
1. Electrical Humidifier provided for vault humidifier control.		X
2. 3-inch floor drain provided for dehumidifier.		X

K. DA FORM 4604-R SECURITY CONSTRUCTION STATEMENT

1.	DA FORM 4604-R posted on an interior surface of the vault as required by AR190-11, Section 2.2.d.	X	___
2.	DA FORM 4604-R reviewed and revalidated by Engineer personnel within the last 5 years as required by AR190-11, Section 2.2.d.	X	___

L. SUMMARY

1.	This facility meets Class II storage requirements for weapons.	___	X

Note: Items shown in **Bold** typeface are minimum mandatory standards. If the YES column entry can not be checked or one of the better standards is not met, the vault is not in compliance with AR 190-11 dated 12 February 1998, and can not be certified for the storage of Category II and III arms and ammunition.

** Indicates new facility construction criteria which is better than existing structure criteria.

M. WAIVERS, UNUSUAL REQUIREMENTS AND ADDITIONAL FEATURES

- Arms Vault was constructed concurrently with the Installation
- Tumbler mechanism in main vault door is failing.

N. CERTIFICATION OF COMPLIANCE WITH CRITERIA SET FORTH IN AR 190-11

This facility meets the minimum structural criteria specified in Appendix G-2 of AR 109-11 dated 12 February 1998 for existing facilities located either on or off a military installation, and therefore meets the minimum structural standards for the storage of Category II and Category III arms. In addition, the storage of small quantities of Category II and Category III ammunition may be authorized by the commander to be stored in the vault with the weapons in accordance with the provisions of Section 5-8c.(1)(a) of AR 190-11. However, once the tumbler mechanism fails, opening the vault door may become impossible if the vault was locked, or it may be impossible to secure the vault door if the vault door was open during tumbler failure.

J. D. CHADWICK
MAJ, EN, USAR
Mechanical Engineer, U.S. Army FEG

Date: 7 December 2001

ENCLOSURE E

DEPARTMENT OF THE ARMY
UNITED STATES ARMY FACILITY ENGINEER GROUP
416TH ENGINEER COMMAND
TDA AUGMENTATION
10 South 100 Frontage Road
Darien, IL 60561-1780

INSTALLATION STATUS REPORT

For

Wilkes-Barre USAR Center

Wilkes-Barre, Pennsylvania
Facility I.D. No. PA099

Date of Visit: 6-7 December 2001

PREPARED BY:

FACILITY ENGINEER GROUP (416th ENCOM)
FACILITY ENGINEER CENTER - NORTHEAST

FORT INDIANTOWN GAP

FACILITY ENGINEERING TEAM
Annville, Pennsylvania

SECTION 1: EXECUTIVE SUMMARY (ISR)

INSTALLATION NAME: Wilkes-Barre United States Army Reserve Center

INSTALLATION NUMBER: PA099 DATE: 6-7 December 2001

1. The Fort Indiantown Gap Facility Engineer Team performed a site inspection on 6-7 December 2001 of the Wilkes-Barre U. S. Army Reserve Center.

2. The Installation Status Report (ISR) indicated the following "red" component for the Wilkes-Barre OMS using (Booklet #5): Building Exterior. Building exterior has seven subsets of which the gutters and downspouts, the roof, and the foundation are green. The red subsets are: lacks exterior signage, exterior walls severely cracked and damaged, and the roll up doors need to be replaced. Handicapped provisions were not evaluated at this time. Additionally the Large Maintenance Area was marked as green, and upon further evaluation was determined to be Red. Large Maintenance Area had 16 subsets evaluated. The seven Red items were as follows: Required bollards not installed, Lift equipment required but not installed, lightning rods and grounding cables required but not installed, Buildings interior set up so large vehicles can not pull completely into shop area, Floor drains not installed to waste water collection, ceiling extremely damaged and emergency lighting not installed. The Large Maintenance area is a critical component and therefore brings the overall status of the OMS from a Green to a Red.

3. The exterior signage for the OMS is non-existent. Appropriate signs for the OMS is less than $2,500 and could be purchased and installed using an impact card. The exterior wall was damaged by vehicle impact. The approximately 15 square feet of damaged cinderblocks could be replaced for less than $2,500. The major item for the building exterior is the roll up doors. These original wood roll up doors can no longer be properly secured and are showing extreme signs of age. The replacement of the doors is expected to cost approximately $23,750 utilizing RS Means estimating data.

4. The Large Maintenance Area requires some substantial work to bring it to Green. Protection bollards need to be installed around the OMS as well as around an existing fire hydrant, gas meter and the main building itself. Damage has already been done to the OMS because of the lack of bollards. The estimated cost for installing approximately 18 bollards is $10,276.88. Lifting equipment in a large maintenance area is a requirement, to install lifting equipment capable of lifting the type of vehicles currently part of the units should cost approximately $13,200 to install. Installation of lightning rods and grounding cables can be done for less than $2,500 and should be performed using the impact card. The current set up of cages inside the OMS restricts the size of vehicle permitted into the OMS. If the caging is a unit requirement, then the cages should be moved to fill up one of the four work bays. This will allow the three remaining bays to be used for large vehicles. The floor drains appear to feed directly to the storm water sewer line. Floor drains must be connected to the oil water separator and feed to the sanitary sewer. Currently there is no oil water separator. An oil water separator must be installed and connected to the sanitary sewer as part of the vehicle wash rack, and the floor drains must be connected to the oil water separator. The estimated cost for installing an oil water

separator, the sanitary sewer, and the OMS floor drains is approximately $25,906.25 utilizing RS Means estimating data. The ceiling in the OMS needs to have drywall installed over the existing wood supports. Fiberglass batting insulation in the wood eaves is falling out and the light reflection is poor. Additional lights should be installed at the same time to bring the lighting requirements from Amber to Green. This work will cost approximately $14,941.25. Emergency lighting must be installed in the OMS, this work is less than $2,500 and can be accomplished with the impact card.

5. The ISR indicated the following "red" component for the Wilkes-Barre USAR Center using (Booklet #10): Kitchen has seven components of which three were red. A combination ventilation hood and fire suppression system must be installed over the stove. This will cost approximately $ 6,750. The layout of the kitchen must be evaluated and made more efficient and functional. The cost estimate for this is a subject call and may cost upwards of $20,000. If a kitchen is not required, the kitchen equipment should be removed, and the area designated a break area and should not be evaluated as a kitchen during the next ISR

J-B Chadwick
MAJ, EN, USAR
Mechanical Engineer

SECTION 2: COST ESTIMATES AND SCOPES OF WORK

See Enclosure C Real Property Maintenance Activities & Project Documentation for cost estimates.

FINAL REPORT
LEAD ABATEMENT

US ARMY RESERVE CENTER
WILKES-BARRE, PA 18702-6926

CSM SP SERRENTI US ARC
SCRANTON, PA 18510-1994

NORTH PENN US ARMY RESERVE CENTER
WORCESTER, PA 19490-9999

HORSHAM MEMORIAL US ARC
HORSHAM, PA 19044-3399

BIOSPHERE

CONTENTS

Executive summary US ARC, Wilkes Barre ES-1
SAMPLE RESULTS
SAMPLE DATA FORMS
blue spacer
Executive summary US ARC,Scranton.....ES-2
SAMPLE RESULTS
SAMPLE DATA FORMS
blue spacer
Executive summary US ARC,North Penn.....ES-3
SAMPLE RESULTS
SAMPLE DATA FORMS
blue spacer
Executive summary US ARC, Horsham.....ES-4
SAMPLE RESULTS
SAMPLE DATA FORMS
blue spacer

HAZARDOUS WASTE OPERATIONS MANAGEMENT
ASBESTOS/ LEAD AIR MONITORING
RESPIRATOR FIT TESTING
EMPLOYEE TRAINING
OSHA MONITORING
LEAD-BASED PAINT TESTING
INDOOR AIR QUALITY STUDIES
ENVIRONMENTAL PHASE I,II,III ASSESSMENTS
BIOSPHERE

Industrial Hygiene Consultants
PAGE 215 305 9526 (24 hours)
FAX/ PHONE 215 265 2098 (8AM - 6PM)
935 Penn Circle Suite B 610 · King of Prussia, Pennsylvania 19406

LEAD ABATEMENT
PROJECT MONITORING
FINAL REPORT
US ARMY RESERVE CENTER
WILKES -BARRE, PA 18702-6926

EXECUTIVE SUMMARY

The following summary of project objectives was completed:

1) Movable items in range area and NBS storage were removed and decontaminated by HEPA vacuuming and/or wet wiping. In lieu of wipe sampling objective observation of dust on objects determined level of decontamination.
2) Steel bullet deflectors and lights were removed and disposed of as construction debris.
3) Particle board walls were partially removed. Difficulty in demolition and subsequent Army approval resulted in remaining wall left in place.
4) All surfaces in area were decontaminated by lead wash procedures.
5) Air testing during abatement and following abatement was conducted.
6) OSHA employee sampling was conducted to determine exposure levels.
7) Final clearance wipe samples and air samples were collected.
   The following results were noted:
   Round one wipe and air samples collected 11/16/93.as specified in ARMY SOP. See Samples WIL 11/16 01-12; 4 are above standard of 200ug/ft^2. Failed areas retested 11/23, see Samples WIL 11/23 01-05. Results are below standard of 200 ug/ft^2. Required samples for final clearance all pass following round two testing and recleaning of work area. Required air samples were below the standard of 10 ug/fy^2, see samples WIL 11/16 13-16. Based upon results of random wipe sampling and air sampling the work area is clear for coating/encapsulation.

   Employee Timed Wieghted averages during removal activities were below 50 ug/m^3. Outside air samples remained below 10ug/m^3 with the exception of sample collected in exhaust of HEPA, see WIL 11/11 03. Supervisor was informed and problem was corrected by checking seal of HEPA filter.

signed: Michael Hyder, PIH date: 5 JAN 94

CALI

CUMBERLAND ANALYTICAL LABORATORIES, INC.
56 North Second Street - Chambersburg, Pennsylvania 17201
PHONE: (717) 263-5943 **FAX: (717) 263-4117**

Plymouth Environmental Co., Inc.
2300 Butler Pike, Suite A
Plymouth Meeting, Pa. 19462

CC: Mike Hyder of Biosphere Environmental Services

PAT ID# 17201-002
DER Lab # 28-354
Laboratory Report No.: 93-1613-005 FINAL
Date Received: November 17, 1993
Date Completed: November 17, 1993 REVISION

All samples are dissolved and digested in nitric acid prior to final analysis by atomic absorption spectroscopy.

Sample: Job Site: Wilkes Barre Army National Guard Center
Collected 11//8-11/93

Sample	Sample Size liters	Date Collected	Total lead ug/filter	Lead ug/l	Lead ug/m³
11/8-01	777	11/0/93	14	0.018	18
11/9-01	240	11/9/93	5.1	0.021	21
11/9-02	2400	11/9/93	<4	<0.002	<2
11/10-01	325	11/10/93	<4	<0.013	<13
11/10-02	1600	11/10/93	12.4	0.008	8
11/10-03	120	11/10/93	8.5	0.071	71
11/11-01	272	11/11/93	500	1.838	1,838
11/11-02	1463	11/11/93	8.1	0.006	6
11/11-03	1200	11/11/93	583	0.486	486
11/11-04	87.4	11/11/93	<4	<0.004	<4

ug = micrograms

Results of wipe sample analyses will be completed on 11/18/93

Analyst
D.R.

Laboratory Director

Donald R. Richner Jr.

CUMBERLAND ANALYTICAL LABORATORIES, INC.
56 North Second Street - Chambersburg, Pennsylvania 17201
PHONE: (717) 263-5943 FAX: (717) 263-4117

Plymouth Environmental Co., Inc.
2300 Butler Pike, Suite A
Plymouth Meeting, Pa. 19462

CC: Mike Hyder of Biosphere Environmental Services

PAT ID# 17201-002
DER Lab # 28-354
Laboratory Report No.: 93-1613-004 FINAL
Date Received: November 17, 1993
Date Completed: November 18, 1993

Wipe Samples From Wilkes Barre Army National Guard Center

Description	Sample #	Total Lead ug/Ft²
WS-WIL-11/16-1	11/16/93	<20
WS-WIL-11/16-2	11/16/93	33
WS-WIL-11/16-3	11/16/93	<20
WS-WIL-11/16-4	11/16/93	78
WS-WIL-11/16-5	11/16/93	79
WS-WIL-11/16-6	11/16/93	357
WS-WIL-11/16-7	11/16/93	918
WS-WIL-11/16-8	11/16/93	1264
WS-WIL-11/16-9	11/16/93	100
WS-WIL-11/16-10	11/16/93	307
WS-WIL-11/16-11	11/16/93	<20
WS-WIL-11/16-12	11/16/93	<20

Current Hud guidelines have a limit of 200 ug/ft² for floors
500 ug/ft² for Sills
800 ug/ft² for Window Sill Wells

ANALYST
D.R.

Laboratory Director

Donald R. Richner Jr.

CALI

CUMBERLAND ANALYTICAL LABORATORIES, INC.
56 North Second Street - Chambersburg, Pennsylvania 17201
PHONE: (717) 263-5943 FAX: (717) 263-4117

Plymouth Environmental Co., Inc.
2300 Butler Pike, Suite A
Plymouth Meeting, Pa. 19462

CC: Mike Hyder of Biosphere Environmental Services

PAT ID# 17201-002
DER Lab # 28-354
Laboratory Report No.: 93-1613-006 Final
Date Received: November 24, 1993
Date Completed: November 29, 1993

Description	Sample #	Total Lead ug/Ft²
Wilkes Barre		
WIL-11/23-01	11/23/93	28
WIL-11/23-02	11/23/93	165
WIL-11/23-03	11/23/93	85
WIL-11/23-4	11/23/93	140
WIL-11/23-5	11/23/93	<20
Scranton		
SCR-11/23-01	11/23/93	80
SCR-11/23-02	11/23/93	50
SCR-11/23-03	11/23/93	998
SCR-11/23-04	11/23/93	906
SCR-11/23-05	11/23/93	6,440
SCR-11/23-06	11/23/93	190
SCR-11/23-07	11/23/93	1,945
SCR-11/23-08	11/23/93	34
SCR-11/23-09	11/23/93	227
SCR-11/23-10	11/23/93	296
SCR-11/23-11	11/23/93	466 *
SCR-11/23-15	11/23/93	<20

* A portion of this sample spilled after digestion, prior to final dilution, this is the best estimate possible based on the amount of sample lost and that remaining for analysis.

Current Hud guidelines have a limit of 200 ug/ft² for floors
500 ug/ft² for Sills
800 ug/ft² for Window Sill Wells

ANALYST
D.R.

Laboratory Director

Donald R. Richner Jr.

WIPE SAMPLING AND

AIR MONITORING DATA TABULATION
LEAD ANALYSIS
(NIOSH 7082)

BIOSPHERE

PROJECT NO. _____

CLIENT Plymouth

LOCATION Wilkes-Barre ANG, Second Fl.

FILTER LOT NO. P0-Mm36335

GILIBRATOR /ROTOMETER NO. MFR03

Biosphere Environmental Services
935 Penn Circle, Suite B610
King of Prussia, PA 19406

Subcontract Laboratory Cumberland Analytical (CA)

NIOSH PAT Lab I.D. _____

DATE	SAMPLE I.D. NO.	LOCATION DESCRIPTION (see diagram for exact location) person / location / work type	PUMP NO.	SAMPLING PERIOD (MILITARY TIME) START	STOP	SAMPLE TIME (MIN.)	CALIBRATION FLOW RATE L/MIN. PRE	POST	SAMPLE VOLUME (LITERS)	Wipe area result (µg/ft²)	AIRBORNE RESULT (µg/m³)	DETECTION LIMIT	M. Kelly SAMPLED BY	ANALYZED BY
11/16 93	WS-WIL 11/16 01	NBC rm Final wipe smpl, ceiling, 1ft²	✓							<20			MH	CA
	WS-WIL 11/16 02	Final wipe smpl, ceiling, 1ft²	✓							33				
	WS-WIL 11/16 03	Rear wall NBC rm " wall, 1ft²	✓							<20				
	WS-WIL 11/16 04	on warning sign " wall, 1ft²	✓							78				
	WS-WIL 11/16 05	at base wall " wall, 1ft²	✓					Not applicable		79				
	WS-WIL 11/16 06	7' up wall " wall, 1ft²	✓							*357				
	WS-WIL 11/16 07	at edge of pit 6 feet from E wall Final wipe smpl floor 1ft²	✓							*918				
	WS-WIL 11/16 08	30 feet from pit center rm " " 1ft²	✓							*1,264				
	WS-WIL 11/16 09	along wall 3/4 way to front " " 1ft²	✓							100				
	WS-WIL 11/16 10	Final wipe smpl outside floor of classroom 1ft²	✓							*307				
	WS-WIL 11/16 11	" 2' from wall outside floor, 1ft²	✓							<20				
	WS-WIL 11/16 12	" Blank	✓							<20			MH	
	WIL 11/16 13	Final air smpl. inside, front pit	18	1046	1222	96	11.0	11.0	1056	<10			MH	
	WIL 11/16 14	" inside at NBC rm	24	1029	1230	121	13.0	13.0	1573	<10			MH	
11/16 93	WIL 11/16 15	" outside rm 209	12	1030	1232	122	12.0	12.0	1464	<10			MH	CA

LOQ 5ng/m³

SAMPLE TYPE SUFFIX: B - Field Blank P - Pretest D - During C - Clearance NA - Not Analyzed, obscured due to heavy filter loading

WIPE SAMPLING AND
AIR MONITORING DATA TABULATION
LEAD ANALYSIS
(NIOSH 7082)

BIOSPHERE

PROJECT NO. _____

CLIENT Plymouth

LOCATION Wilkes-Barre ANG, Rifle Range

FILTER LOT NO. —

GILIBRATOR /ROTOMETER NO. —

Biosphere Environmental Services
935 Penn Circle, Suite B610
King of Prussia, PA 19406

Subcontract Laboratory (underhand Anal) (CA)

NIOSH PAT Lab I.D. _____

DATE	SAMPLE I.D. NO.	LOCATION DESCRIPTION person / location / work type	PUMP NO.	SAMPLING PERIOD (MILITARY TIME) START	SAMPLING PERIOD (MILITARY TIME) STOP	SAMPLE TIME (MIN.)	CALIBRATION FLOW RATE L/MIN. PRE	CALIBRATION FLOW RATE L/MIN. POST	SAMPLE VOLUME (LITERS)	wipe area result (µg/ft²)	AIRBORNE RESULT (µg/m³)	DETECTION LIMIT	173.52 SAMPLED BY	ANALYZED BY
11/23 93	WIK 11/23 01	equipment room floor (classroom) at clearway Final wipe tests found 2 failed areas.	1ft²							2			MH	CA
	02	center floor 25' from pit	1ft²							125			MH	CA
	03	edge pit floor center	1ft²							35			MH	CA
	04	wall at pit 7' up	1ft²							140			MH	CA
	05	blank								<20			MH	CA

SAMPLE TYPE SUFFIX: B - Field Blank P - Pretest D - During C - Clearance NA - Not Analyzed, obscured due to heavy filter loading

INDUSTRIAL HYGIENE SAMPLING DATA SHEET

PLANT	CODE	DATE SAMPLED	TEST NUMBER
Wilkes-Barre Army Natl Guard		11/08/93	WIL801

ADDRESS (STREET)	DEPARTMENT	CODE
(CITY) (STATE) (ZIP)	OPERATION	CODE

PROJECT DESCRIPTION/COMMENTS

Lead decontamination / removal decommissioned rifle range. Sampled at front of range at pit. Pre-test

SUBMITTED BY Michael Hyder DATE 11/10/93

INFORMATION

NAME	CLOCK NUMBER	SOCIAL SECURITY NUMBER

JOB TITLE	O.T. CODE
NA	

JOB DESCRIPTION

RESPIRATOR ISSUED	WORN	TRAINING	MFG/TYPE
☐ YES ☐ NO	☐ YES ☐ NO	☐ YES ☐ NO	

SAMPLE INFORMATION

PUMP NUMBER	CASSETTE NUMBER	SAMPLE MEDIA	DUAL OSHA SAMPLE
HF13	WIL01	25mm, .8µm MCE	☐ YES ☒ NO

PARAMETERS SAMPLED (TYPE/POSSIBLE INTERFERENCES)

Lead in air.

	TIME ON	24 HOUR CLOCK	TIME OFF	24 HOUR CLOCK	SAMPLE TIME
Pump	0905		1056		1 hours 51 minutes

Time Checks	0905	—	—	—	1056	—	—	—	—	—	ROTOMETER AVG.
Roto Setting	7	—	—	—	7	—	—	—	—	—	7

Ambient Conditions	TEMPERATURE	PRESSURE	RELATIVE HUMIDITY	AVERAGE FLOW RATE	SAMPLE TIME	TOTAL VOLUME SAMPLED
	25 °C	— mmHg	~40 %	7 LPM	111 Min.	777.4 cubic meters

LABORATORY RESULTS

PARAMETER	LAB RESULTS BLANK CORRECTED (specify units)	VOLUME SAMPLED (specify units)	CONCENTRATION (specify units)	OSHA STANDARD
Lead				50 /m3

COMMENTS (METHOD USED/SPECIAL CALCULATIONS/CONFIDENCE LEVEL)

NIOSH 7082, LOQ 5ug/m3 required.

results to: Mike Hyder
935 Penn Circle Apt B610
King of Prussia, PA 19406

FAX results to: 215 265 2098 on complete

APPROVED (LAB)	DATE

INDUSTRIAL HYGIENE SAMPLING DATA SHEET

PLANT	CODE	DATE SAMPLED	TEST NUMBER
WBANG		11/9/93	W1L 11191 01

ADDRESS (STREET)	DEPARTMENT	CODE
(CITY) (STATE) (ZIP)	OPERATION	CODE

PROJECT DESCRIPTION/COMMENTS

~~Steel~~ demolition

SUBMITTED BY	DATE

INFORMATION

NAME	CLOCK NUMBER	SOCIAL SECURITY NUMBER
John Coen		

JOB TITLE	O.T. CODE

JOB DESCRIPTION

RESPIRATOR ISSUED	WORN	TRAINING	MFG/TYPE
☑ YES ☐ NO	☑ YES ☐ NO	☑ YES ☐ NO	1/2 Face MSA

SAMPLE INFORMATION

PUMP NUMBER	CASSETTE NUMBER	SAMPLE MEDIA	DUAL OSHA SAMPLE
		18 nm, MCE	☐ YES ☐ NO

PARAMETERS SAMPLED (TYPE/POSSIBLE INTERFERENCES)

Lead in Air

	TIME ON (24 HOUR CLOCK)	TIME OFF (24 HOUR CLOCK)	SAMPLE TIME
Pump	0915	1115	hours 120 minutes

											ROTOMETER AVG.
Time Checks											
Roto Setting	2.0				2.0						2.0

Ambient Conditions	TEMPERATURE °C	PRESSURE mmHg	RELATIVE HUMIDITY %	AVERAGE FLOW RATE	SAMPLE TIME	TOTAL VOLUME SAMPLED
				2.0 LPM	120 Min.	240 L ~~cubic meters~~

LABORATORY RESULTS

PARAMETER	LAB RESULTS BLANK CORRECTED (specify units)	VOLUME SAMPLED (specify units)	CONCENTRATION (specify units)	OSHA STANDARD
Lead				

COMMENTS (METHOD USED/SPECIAL CALCULATIONS/CONFIDENCE LEVEL)

NIOSH 7082, 30 µg LOQ required

APPROVED (LAB)	DATE

INDUSTRIAL HYGIENE SAMPLING DATA SHEET

PLANT	CODE	DATE SAMPLED	TEST NUMBER
WBANG		11/9/93	W C 9 0 2

ADDRESS (STREET)	DEPARTMENT	CODE
(CITY) (STATE) (ZIP)	OPERATION	CODE

PROJECT DESCRIPTION/COMMENTS

Outside air sample at entrance to range area

SUBMITTED BY	DATE

INFORMATION

NAME	CLOCK NUMBER	SOCIAL SECURITY NUMBER
JOB TITLE		O.T. CODE
JOB DESCRIPTION		

RESPIRATOR ISSUED	WORN	TRAINING	MFG/TYPE
☑ YES ☐ NO	☑ YES ☐ NO	☑ YES ☐ NO	

SAMPLE INFORMATION

PUMP NUMBER	CASSETTE NUMBER	SAMPLE MEDIA	DUAL OSHA SAMPLE ☐ YES ☐ NO

PARAMETERS SAMPLED (TYPE/POSSIBLE INTERFERENCES)

lead in air

	TIME ON	24 HOUR CLOCK	TIME OFF	24 HOUR CLOCK	SAMPLE TIME
Pump	1005		1405		hours 240 minutes

Time Checks											ROTOMETER AVG.
Roto Setting	10.0				10.0						

Ambient Conditions	TEMPERATURE	PRESSURE	RELATIVE HUMIDITY	AVERAGE FLOW RATE	SAMPLE TIME	TOTAL VOLUME SAMPLED
	°C	mmHg	%	10.0 LPM	240 Min.	2400 L cubic ~~meters~~

LABORATORY RESULTS

PARAMETER	LAB RESULTS BLANK CORRECTED (specify units)	VOLUME SAMPLED (specify units)	CONCENTRATION (specify units)	OSHA STANDARD
Lead				

COMMENTS (METHOD USED/SPECIAL CALCULATIONS/CONFIDENCE LEVEL)

NIOSH 7082, LOQ 5 ug required

APPROVED (LAB)	DATE

INDUSTRIAL HYGIENE SAMPLING DATA SHEET

PLANT	CODE	DATE SAMPLED	TEST NUMBER
Wilkes Barre ANG			WILL 11/79 01

ADDRESS (STREET)	DEPARTMENT	CODE
(CITY) (STATE) (ZIP)	OPERATION	CODE

PROJECT DESCRIPTION/COMMENTS

SUBMITTED BY	DATE

INFORMATION

NAME	CLOCK NUMBER	SOCIAL SECURITY NUMBER
John Burns		

JOB TITLE	O.T. CODE

JOB DESCRIPTION: Demolition of wall ceiling with surf lead ~ 500 ug/ft²

RESPIRATOR ISSUED	WORN	TRAINING	MFG/TYPE
☑ YES ☐ NO	☑ YES ☐ NO	☑ YES ☐ NO	MSA ½ face

SAMPLE INFORMATION

PUMP NUMBER	CASSETTE NUMBER	SAMPLE MEDIA	DUAL OSHA SAMPLE
HF513	WILL 01		☑ YES ☐ NO

PARAMETERS SAMPLED (TYPE/POSSIBLE INTERFERENCES): Lead in air

	TIME ON	TIME OFF (24 HOUR CLOCK)	SAMPLE TIME
Pump	1021	1312	— hours 171 minutes

Time Checks	1021										ROTOMETER AVG.
Roto Setting	2.0	—	—	—	1.8						1.9

Ambient Conditions	TEMPERATURE	PRESSURE	RELATIVE HUMIDITY	AVERAGE FLOW RATE	SAMPLE TIME	TOTAL VOLUME SAMPLED
	°C	mmHg	%	1.9 LPM	171 Min.	325 L ~~cubic~~ meters

LABORATORY RESULTS

PARAMETER	LAB RESULTS BLANK CORRECTED (specify units)	VOLUME SAMPLED (specify units)	CONCENTRATION (specify units)	OSHA STANDARD
Lead			ug/m³	50 ug/m³

COMMENTS (METHOD USED/SPECIAL CALCULATIONS/CONFIDENCE LEVEL)

NIOSH 7082, LOQ 30 ug required

APPROVED (LAB)	DATE

INDUSTRIAL HYGIENE SAMPLING DATA SHEET

PLANT	CODE	DATE SAMPLED	TEST NUMBER
73 ANG		11/10/93	W1L1119 02

ADDRESS (STREET)	DEPARTMENT	CODE

CITY (STATE) (ZIP)	OPERATION	CODE

PROJECT DESCRIPTION/COMMENTS

Sample in hallway at Rm 209 door entrance, during mask removal (wall, ceiling acoustical tile) through hallway

SUBMITTED BY M Hydar — DATE 11/10/93

PERSONNEL INFORMATION

NAME	CLOCK NUMBER	SOCIAL SECURITY NUMBER

JOB TITLE	O.T. CODE

JOB DESCRIPTION

RESPIRATOR ISSUED	WORN	TRAINING	MFG/TYPE
☐ YES ☐ NO	☐ YES ☐ NO	☐ YES ☐ NO	

SAMPLE INFORMATION

PUMP NUMBER	CASSETTE NUMBER	SAMPLE MEDIA	DUAL OSHA SAMPLE
			☐ YES ☐ NO

PARAMETERS SAMPLED (TYPE/POSSIBLE INTERFERENCES)

Lead in air.

	TIME ON	24 HOUR CLOCK	TIME OFF	24 HOUR CLOCK	SAMPLE TIME
Pump	1047		1312		hours / 45 minutes

Time Checks	1047				1312						ROTOMETER AVG.
Roto Setting	11				11						11

Ambient Conditions	TEMPERATURE	PRESSURE	RELATIVE HUMIDITY	AVERAGE FLOW RATE	SAMPLE TIME	TOTAL VOLUME SAMPLED
	°C	mmHg	%	11 LPM	145 Min.	1600 < ~~cubic meters~~

LABORATORY RESULTS

PARAMETER	LAB RESULTS BLANK CORRECTED (specify units)	VOLUME SAMPLED (specify units)	CONCENTRATION (specify units)	OSHA STANDARD
Lead			ug/m3	

COMMENTS (METHOD USED/SPECIAL CALCULATIONS/CONFIDENCE LEVEL)

NIOSH 7082, LOQ ~~[illegible]~~ 5 ug required

APPROVED (LAB)	DATE

INDUSTRIAL HYGIENE SAMPLING DATA SHEET

PLANT	CODE	DATE SAMPLED	TEST NUMBER
WBANG		11/10/93	W1C1110 03

ADDRESS (STREET)	DEPARTMENT	CODE
(CITY) (STATE) (ZIP)	OPERATION	CODE

PROJECT DESCRIPTION/COMMENTS

Demolition Wall

SUBMITTED BY	DATE
MK	

EMPLOYEE INFORMATION

NAME	CLOCK NUMBER	SOCIAL SECURITY NUMBER
John Burns		

JOB TITLE	O.T. CODE

JOB DESCRIPTION

RESPIRATOR ISSUED	WORN	TRAINING	MFG/TYPE
☑ YES ☐ NO	☑ YES ☐ NO	☑ YES ☐ NO	1/2 Face HEPA

SAMPLE INFORMATION

PUMP NUMBER	CASSETTE NUMBER	SAMPLE MEDIA	DUAL OSHA SAMPLE
LF513		1.8um MCE, 25mm	☑ YES ☐ NO

PARAMETERS SAMPLED (TYPE/POSSIBLE INTERFERENCES)

Lead in air

	TIME ON (24 HOUR CLOCK)				TIME OFF (24 HOUR CLOCK)				SAMPLE TIME		ROTOMETER AVG.
Pump									hours	60 minutes	
Time Checks	1314				1414						
Roto Setting	2.0				2.0						2.0

Ambient Conditions	TEMPERATURE	PRESSURE	RELATIVE HUMIDITY	AVERAGE FLOW RATE	SAMPLE TIME	TOTAL VOLUME SAMPLED
	°C	mmHg	%	2.0 LPM	60 Min.	120 L ~~cubic meters~~

LABORATORY RESULTS

PARAMETER	LAB RESULTS BLANK CORRECTED (specify units)	VOLUME SAMPLED (specify units)	CONCENTRATION (specify units)	OSHA STANDARD
Lead				50 µg/m3

COMMENTS (METHOD USED/SPECIAL CALCULATIONS/CONFIDENCE LEVEL)

LOQ 30 µg/m3 required, NIOSH 7082

APPROVED (LAB)	DATE

NDUSTRIAL HYGIENE SAMPLING DATA SHEET

PLANT	CODE	DATE SAMPLED	TEST NUMBER
WBANG		11/11/93	W L 1 1 1 0 1

DDRESS (STREET)	DEPARTMENT	CODE

CITY) (STATE) (ZIP)	OPERATION	CODE

ROJECT DESCRIPTION/COMMENTS

bagging of sand.

SUBMITTED BY	DATE
M Hyder	

INFORMATION

NAME	CLOCK NUMBER	SOCIAL SECURITY NUMBER
John Coen		

JOB TITLE	O.T. CODE
worker	

JOB DESCRIPTION: bagging of Lead contaminated sand.

RESPIRATOR ISSUED	WORN	TRAINING	MFG/TYPE
☑ YES ☐ NO	☑ YES ☐ NO	☑ YES ☐ NO	MSA, 1/2 face

SAMPLE INFORMATION

PUMP NUMBER	CASSETTE NUMBER	SAMPLE MEDIA	DUAL OSHA SAMPLE
L F 5 3 2		25mm, 8mm MCE	☑ YES ☐ NO

PARAMETERS SAMPLED (TYPE/POSSIBLE INTERFERENCES): Lead in air

	TIME ON	24 HOUR CLOCK	TIME OFF	24 HOUR CLOCK	SAMPLE TIME
Pump	0924		1140		hours 136 minutes

Time Checks											ROTOMETER AVG.
Roto Setting											2.0

Ambient Conditions	TEMPERATURE	PRESSURE	RELATIVE HUMIDITY	AVERAGE FLOW RATE	SAMPLE TIME	TOTAL VOLUME SAMPLED
	25 °C	mmHg	50 %	2.0 LPM	136 Min.	272 L cubic meters

LABORATORY RESULTS

PARAMETER	LAB RESULTS BLANK CORRECTED (specify units)	VOLUME SAMPLED (specify units)	CONCENTRATION (specify units)	OSHA STANDARD
Lead				50 ug/m³

COMMENTS (METHOD USED/SPECIAL CALCULATIONS/CONFIDENCE LEVEL)

NIOSH 7082, 30 ug LOQ required

PPROVED (LAB)	DATE

INDUSTRIAL HYGIENE SAMPLING DATA SHEET

PLANT	CODE	DATE SAMPLED	TEST NUMBER
WDANG		11/11/93	W1 1 6 1 1 1 1 0 2

ADDRESS (STREET)	DEPARTMENT	CODE
(CITY) (STATE) (ZIP)	OPERATION	CODE

PROJECT DESCRIPTION/COMMENTS

area sample outside work area in hallway at Rm 209. During bag out of lead contaminated sand

SUBMITTED BY M. Hyder | DATE

INFORMATION

NAME | CLOCK NUMBER | SOCIAL SECURITY NUMBER

JOB TITLE | O.T. CODE

JOB DESCRIPTION bagging of sand

RESPIRATOR ISSUED	WORN	TRAINING	MFG/TYPE
☐ YES ☐ NO	☐ YES ☐ NO	☐ YES ☐ NO	

SAMPLE INFORMATION

PUMP NUMBER	CASSETTE NUMBER	SAMPLE MEDIA	DUAL OSHA SAMPLE
			☐ YES ☐ NO

PARAMETERS SAMPLED (TYPE/POSSIBLE INTERFERENCES)

Lead in air

	TIME ON			24 HOUR CLOCK	TIME OFF			24 HOUR CLOCK	SAMPLE TIME		
Pump									hours	133 minutes	
Time Checks	0927				1140						ROTOMETER AVG.
Roto Setting	11.0				11.0						11.0

Ambient Conditions	TEMPERATURE	PRESSURE	RELATIVE HUMIDITY	AVERAGE FLOW RATE	SAMPLE TIME	TOTAL VOLUME SAMPLED
	°C	mmHg	%	1.0 LPM	133 Min.	1463 L cubic meters

LABORATORY RESULTS

PARAMETER	LAB RESULTS BLANK CORRECTED (specify units)	VOLUME SAMPLED (specify units)	CONCENTRATION (specify units)	OSHA STANDARD
Lead				10 µg/m³

COMMENTS (METHOD USED/SPECIAL CALCULATIONS/CONFIDENCE LEVEL)

NIOSH 7082, 5 µg/m³ LOQ required

APPROVED (LAB) | DATE

INDUSTRIAL HYGIENE SAMPLING DATA SHEET

PLANT	CODE	DATE SAMPLED	TEST NUMBER
WBANG		11/11/93	W L 0 3

ADDRESS (STREET)	DEPARTMENT	CODE
(CITY) (STATE) (ZIP)	OPERATION	CODE

PROJECT DESCRIPTION/COMMENTS

Sample in exhaust stream of HEPA unit during removal/bagging of lead coat sand

SUBMITTED BY	DATE
M. Hyde	

INFORMATION

NAME	CLOCK NUMBER	SOCIAL SECURITY NUMBER
JOB TITLE		O.T. CODE
JOB DESCRIPTION		

RESPIRATOR ISSUED	WORN	TRAINING	MFG/TYPE
☐ YES ☐ NO	☐ YES ☐ NO	☐ YES ☐ NO	

SAMPLE INFORMATION

PUMP NUMBER	CASSETTE NUMBER	SAMPLE MEDIA	DUAL OSHA SAMPLE
H F		25mm, Pvn MCE	☐ YES ☒ NO

PARAMETERS SAMPLED (TYPE/POSSIBLE INTERFERENCES)

lead in air

	TIME ON	24 HOUR CLOCK	TIME OFF	24 HOUR CLOCK	SAMPLE TIME
Pump	0924		1124		hours 120 minutes

Time Checks											ROTOMETER AVG.
Roto Setting											10

Ambient Conditions	TEMPERATURE	PRESSURE	RELATIVE HUMIDITY	AVERAGE FLOW RATE	SAMPLE TIME	TOTAL VOLUME SAMPLED
	°C	mmHg	%	10.0 LPM	120 Min.	1200 L ~~cubic meters~~

LABORATORY RESULTS

PARAMETER	LAB RESULTS BLANK CORRECTED (specify units)	VOLUME SAMPLED (specify units)	CONCENTRATION (specify units)	OSHA STANDARD
Lead				10 µg/m³

COMMENTS (METHOD USED/SPECIAL CALCULATIONS/CONFIDENCE LEVEL)

NIOSH 7082, LOQ 5 µg/m³ requested

APPROVED (LAB)	DATE

NDUSTRIAL HYGIENE SAMPLING DATA SHEET

WK 11/1/94

PLANT	CODE	DATE SAMPLED	TEST NUMBER
WDANG			

ADDRESS (STREET)	DEPARTMENT	CODE

(CITY) (STATE) (ZIP)	OPERATION	CODE

PROJECT DESCRIPTION/COMMENTS
bagging of lead contaminated sand. ceiling exposure limit sample.

SUBMITTED BY	DATE
Myer	

INFORMATION

NAME	CLOCK NUMBER	SOCIAL SECURITY NUMBER
John Coen		

JOB TITLE	O.T. CODE
worker	

JOB DESCRIPTION
bagging of lead contaminated sand

RESPIRATOR ISSUED	WORN	TRAINING	MFG/TYPE
☑ YES ☐ NO	☑ YES ☐ NO	☑ YES ☐ NO	MSA, 1/2 face

SAMPLE INFORMATION

PUMP NUMBER	CASSETTE NUMBER	SAMPLE MEDIA	DUAL OSHA SAMPLE
			☐ YES ☐ NO

PARAMETERS SAMPLED (TYPE/POSSIBLE INTERFERENCES)
lead in air

	TIME ON	24 HOUR CLOCK	TIME OFF	24 HOUR CLOCK	SAMPLE TIME hours	minutes	
Pump	~~0834~~		~~1140~~				
Time Checks	1312		1358				ROTOMETER AVG.
Roto Setting							1.9

Ambient Conditions	TEMPERATURE °C	PRESSURE mmHg	RELATIVE HUMIDITY %	AVERAGE FLOW RATE LPM	SAMPLE TIME Min.	TOTAL VOLUME SAMPLED cubic ~~meters~~
						87.4 L

LABORATORY RESULTS

PARAMETER	LAB RESULTS BLANK CORRECTED (specify units)	VOLUME SAMPLED (specify units)	CONCENTRATION (specify units)	OSHA STANDARD
Lead				50 ug/m3

COMMENTS (METHOD USED/SPECIAL CALCULATIONS/CONFIDENCE LEVEL)

NIOSH 7082, LOQ 30 ug required

APPROVED (LAB)	DATE

HAZARDOUS WASTE OPERATIONS MANAGEMENT
ASBESTOS/ LEAD AIR MONITORING
RESPIRATOR FIT TESTING
EMPLOYEE TRAINING
OSHA MONITORING
LEAD-BASED PAINT TESTING
INDOOR AIR QUALITY STUDIES
ENVIRONMENTAL PHASE I,II,III ASSESSMENTS
BIOSPHERE
Industrial Hygiene Consultants
PAGE 215 305 9526 (24 hours)
FAX/ PHONE 215 265 2098 (8AM - 6PM)
935 Penn Circle Suite B 610 · King of Prussia, Pennsylvania 19406

LEAD ABATEMENT
PROJECT MONITORING
FINAL REPORT
CSM SP SERRENTI US ARC
SCRANTON, PA 18510-1994

EXECUTIVE SUMMARY

The following summary of project objectives was completed:

1) MOvable items in range area were removed and decontaminated by HEPA vacuuming and/or wet wiping. In lieu of wipe sampling objective observation of dust on objects determined level of decontamination.
2) Steel bullet deflectors and lights were removed and disposed of as construction debris. HVAC unit dismantled and disposed as constr. deb.
3) All surfaces in area were decontaminated by lead wash procedures.
4) Air testing before, during and following abatement was conducted.
5) OSHA employee sampling was conducted to determine exposure levels.
6) Recleaning of failed areas from wipe sampling was conducted.
7) Final clearance wipe samples and air samples were collected (4 wall, 3 floor, 2 ceiling, 2 outside wipe samples/ 3 inside air samples). The following results were noted:
   Round one wipe and air samples collected 11/23/93 as specified in ARMY SOP, see Samples SCR 11/23 01-15. Required air samples were below the standard of 10ug/m^3, see Samples SCR 11/23 12,13,14. 7 wipe samples were above standard of 200 ug/ft^2. Failed areas retested following recleaning 12/3/93; 3 areas were above standard. Remaining areas retested following recleaning on 12/13/93, see Samples SCR 12/3 01-08, SCR 12/13 1-5. Remaining areas all were below standard of 200 ug/ft^2. Based upon results of random wipe sampling and air sampling the work area is clear for coating/encapsulation.

   Employee Timed Weighted Averages during removal activities were below the OSHA permissible exposure limit of 50ug/m^3 as an 8 hour TWA. Outside air samples remained below 10ug/m^3.

signed: _____ date: 5 JAN 94
Michael Hyder, PIH

CALI

CUMBERLAND ANALYTICAL LABORATORIES, INC.
56 North Second Street - Chambersburg, Pennsylvania 17201
PHONE: (717) 263-5943 FAX: (717) 263-4117

Plymouth Environmental Co., Inc.
2300 Butler Pike, Suite A
Plymouth Meeting, Pa. 19462

CC: Mike Hyder of Biosphere Environmental Services

PAT ID# 17201-002
DER Lab # 28-354
Laboratory Report No.: 93-1613-006 Final
Date Received: November 24, 1993
Date Completed: November 29, 1993

Description	Sample #	Total Lead ug/Ft²
Wilkes Barre		
WIL-11/23-01	11/23/93	28
WIL-11/23-02	11/23/93	165
WIL-11/23-03	11/23/93	85
WIL-11/23-4	11/23/93	140
WIL-11/23-5	11/23/93	<20
Scranton		
SCR-11/23-01	11/23/93	80
SCR-11/23-02	11/23/93	50
SCR-11/23-03	11/23/93	998
SCR-11/23-04	11/23/93	906
SCR-11/23-05	11/23/93	6,440
SCR-11/23-06	11/23/93	190
SCR-11/23-07	11/23/93	1,945
SCR-11/23-08	11/23/93	34
SCR-11/23-09	11/23/93	227
SCR-11/23-10	11/23/93	296
SCR-11/23-11	11/23/93	466 *
SCR-11/23-15	11/23/93	<20

* A portion of this sample spilled after digestion, prior to final dilution, this is the best estimate possible based on the amount of sample lost and that remaining for analysis.

Current Hud guidelines have a limit of 200 ug/ft² for floors
500 ug/ft² for Sills
800 ug/ft² for Window Sill Wells

ANALYST
D.R.

Laboratory Director

Donald R. Richner Jr.

CALI

CUMBERLAND ANALYTICAL LABORATORIES, INC.
56 North Second Street - Chambersburg, Pennsylvania 17201
PHONE: (717) 263-5943 FAX: (717) 263-4117

Plymouth Environmental Co., Inc.
2300 Butler Pike. Suite A
Plymouth Meeting, Pa. 19462

CC: Mike Hyder of Biosphere Environmental Services

PAT ID# 17201-002
DER Lab # 28-354
Laboratory Report No.: 93-1613-004 FINAL
Date Received: November 17, 1993
Date Completed: November 17, 1993 REVISION

All samples are dissolved and digested in nitric acid prior to final analysis by atomic absorption spectroscopy.

Sample: Job Site: Scranton Army National Guard Center
Collected 11/15 - 11/16/93

Sample	Sample Size liters	Date Collected	Total lead ug/filter	Lead ug/l	Lead ug/m³
SCR-01	900	11/15/93	<5	<0.006	<6
SCR-02	770	11/15/93	<5	<0.006	<6
SCR-03	863	11/15/93	<5	<0.006	<6
SCR-01	266	11/16/93	13	0.049	49

Sample: Job Site: Wilkes Barre Army National Guard Center
Collected 11//16/93

Sample	Sample Size liters	Date Collected	Total lead ug/filter	Lead ug/l	Lead ug/m³
WIL-13	1056	11/16/93	<5	<0.005	<5
WIL-14	1573	11/16/93	<5	<0.004	<4
WIL-15	1464	11/16/93	<5	<0.004	<4
WIL-16	0	11/16/93	<5	-	-

ug = micrograms

Results of wipe sample analyses will be completed on 11/18/93

Analyst
D.R.

Laboratory Director

Donald R. Richner Jr.

CALI

CUMBERLAND ANALYTICAL LABORATORIES, INC.
56 North Second Street - Chambersburg, Pennsylvania 17201
PHONE: (717) 263-5943 FAX: (717) 263-4117

Plymouth Environmental Co., Inc.
2300 Butler Pike, Suite A
Plymouth Meeting, Pa. 19462

CC: Mike Hyder of Biosphere Environmental Services

PAT ID# 17201-002
DER Lab # 28-354
Laboratory Report No.: 93-1613-006 Final
Date Received: November 24, 1993
Date Completed: November 24, 1993 REVISION

All samples are dissolved and digested in nitric acid prior to final analysis by atomic absorption spectroscopy.

Sample: Job Site: Scranton Army National Guard Center
Collected 11//17-23/93

Sample	Sample Size liters	Date Collected	Total lead ug/filter	Lead ug/l	Lead ug/m³
11/17-01	480	11/17/93	<5	<0.010	<10
11/17-01	5670	11/17/93	5.5	<0.001	<1
11/17-03	6300	11/17/93	<5	<0.001	<1
11/17-04	420	11/17/93	250	0.595	595
11/17-05	2700	11/17/93	<5	<0.002	<2
11/18-01	720	11/18/93	<5	<0.007	<7
11/18-02	64	11/18/93	196	3.06	3,060
11/18-03	1865	11/18/93	11.4	0.011	11
11/18-04	720	11/18/93	<5	<0.007	<7
11/19-01	360	11/19/93	985	2.74	2,740
11/19-02	2430	11/19/93	995	0.409	409
11/19-03	1800	11/19/93	220	0.122	122
11/23-12	1200	11/23/93	7.3	0.006	6
11/23-13	1200	11/23/93	<5	<0.004	<4
11/23-14	1200	11/23/93	<5	<0.004	<4
11/23-16	- -	11/23/93	<5	- -	- -

ug = micrograms

Analyst
D.R.

Laboratory Director

Donald R. Richner Jr.

CALI

CUMBERLAND ANALYTICAL LABORATORIES, INC.
56 North Second Street - Chambersburg, Pennsylvania 17201
PHONE: (717) 263-5943 **FAX: (717) 263-4117**

Plymouth Environmental Co., Inc.
2300 Butler Pike, Suite A
Plymouth Meeting, Pa. 19462

CC: Mike Hyder of Biosphere Environmental Services

PAT ID# 17201-002
DER Lab # 23-354
Laboratory Report No.: 93-1613-007 Final
Date Received: December 7, 1993
Date Completed: December 8, 1993

Description	Sample # Date	Total Lead ug/Ft²
Scranton		
SCR-12/3-01	12/3/93	706
SCR-12/3-02	12/3/93	1,940
SCR-12/3-03	12/3/93	538
SCR-12/3-04	12/3/93	80
SCR-12/3-05	12/3/93	34
SCR-12/3-06	12/3/93	69
SCR-12/3-07	12/3/93	185
SCR-12/3-08 Blank	12/3/93	10

Current Hud guidelines have a limit of 200 ug/ft² for floors
500 ug/ft² for Sills
800 ug/ft² for Window Sill Wells

ANALYST
D.R.

Laboratory Director

Donald R. Richner Jr.

CALI

CUMBERLAND ANALYTICAL LABORATORIES, INC.
56 North Second Street - Chambersburg, Pennsylvania 17201
PHONE: (717) 263-5943 FAX: (717) 263-4117

Plymouth Environmental Co., Inc.
2300 Butler Pike, Suite A
Plymouth Meeting, Pa. 19462

CC: Mike Hyder of Biosphere Environmental Services

PAT ID# 17201-002
DER Lab # 28-354
Laboratory Report No.: 93-1613-009 Final
Date Received: December 15, 1993
Date Completed: December 17, 1993

Description	Sample Date	Total Lead ug/Ft²
Scranton		
SCR-12/13-1	12/13/93	186
SCR-12-13-2	12/13/93	96
SCR-12/13-3	12/13/93	32
SCR-12/13-4	12/13/93	48
SCR-12/13-5	12/13/93	18

Current Hud guidelines have a limit of 200 ug/ft² for floors
500 ug/ft² for Sills
800 ug/ft² for Window Sill Wells

ANALYST
D.R.

Laboratory Director

Donald R. Richner Jr.

AIR MONITORING DATA TABULATION
LEAD ANALYSIS
(NIOSH 7082)

BIOSPHERE

PROJECT NO. Scranton Army Nat'l Guard
CLIENT Plymouth
LOCATION Scranton (SCR) ANG, Dale Range
FILTER LOT NO. Roman 36325
GILIBRATOR/ROTOMETER NO. HF-03

Biosphere Environmental Services
935 Penn Circle, Suite B610
King of Prussia, PA 19406

Subcontract Laboratory Cumberland Analytical
NIOSH PAT Lab I.D.

DATE	SAMPLE I.D. NO.	LOCATION DESCRIPTION person / location / work type	PUMP NO.	SAMPLING PERIOD (MILITARY TIME) START	STOP	SAMPLE TIME (MIN)	CALIBRATION FLOW RATE L/MIN PRE	POST	SAMPLE VOLUME (LITERS)	WIPE AREA RESULT (µg/ft²)	AIRBORNE RESULT (µg/m³)	DETECTION LIMIT	SAMPLED BY (Initials/Signature)	ANALYZED BY
11/23 93	SCR 11/23 01	IWA Final wipe smpl, ceiling	✓							80			MH	Cd
	02	" ceiling	✓							50				
	03	" floor	✓							998				
	04	" floor	✓							906				
	05	" floor	✓							6,440				
	06	" wall 7' high	✓							190				
	07	" wall 2' high	✓							1,945				
	08	" wall 10' high	✓							34				
	09	" wall 5' high	✓							227				
	10	outside workarea at entrance Final wipe smpl, floor	✓							296				
	11	" floor at bike storage	✓							466				
	12	Final air smpl		0810	1010	120	10.0	10.0	1200	<10				
	13	"		0810	1010	120	10.0	10.0	1200	<10				
	14	"		0810	1010	120	10.0	10.0	1200	<10				
11/23 93	SCR 11/23 15	Final wipe blank	✓							<20			MH	Cd

SAMPLE TYPE SUFFIX: B - Field Blank P - Pretest D - During C - Clearance NA - Not Analyzed, obscured due to heavy filter loading

IWA = inside work area
OWA = outside work area

WIPE SAMPLING AND

AIR MONITORING DATA TABULATION
LEAD ANALYSIS
(NIOSH 7082)

BIOSPHERE

PROJECT NO. _____

CLIENT Plymouth

LOCATION Scituate Hub

FILTER LOT NO. 2011m3632T

GILIBRATOR /ROTOMETER NO. 11FR203

Biosphere Environmental Services
935 Penn Circle, Suite B610
King of Prussia, PA 19406

Subcontract Laboratory _____

NIOSH PAT Lab I.D. _____

DATE	SAMPLE I.D. NO.	LOCATION DESCRIPTION person / location / work type	PUMP NO.	SAMPLING PERIOD (MILITARY TIME) START	STOP	SAMPLE TIME (MIN.)	CALIBRATION FLOW RATE L/MIN. PRE	POST	SAMPLE VOLUME (LITERS)	wipe area result (µg/ft²)	AIRBORNE RESULT (µg/m³)	DETECTION LIMIT	SAMPLED BY	ANALYZED BY
11/79	SCR11/17 01	John Cocn, removal									<10		MM	
"	SCR11/17 02 P(Cd)	Outside work area at entrance									<1			
	SCR11/17 03	HEPA exhaust									<1			
	SCR11/17 04	John Cocn removal									595			
	SCR11/17 05	outside work area at door									<2		11/17	
11/18	SCR11/18 01	outside at door, removal									<7			
11/18	SCR11/18 02	John Burns removal									3,060		MM	
11/18	" 03	outside HEPA exhaust									11			
11/18	" 04	John Burns removal									<7			
11/19	SCR11/19 01	inside work area removal									3,740			
"	" 02	outside work area at door ~~[illegible]~~	Contractor informed								409			
	03	outside work area									122			
	[redacted]										[redacted]			
											[redacted]			
											[redacted]			

SAMPLE TYPE SUFFIX: B - Field Blank P - Pretest D - During C - Clearance NA - Not Analyzed, obscured due to heavy filter loading

WIPE SAMPLING AND

AIR MONITORING DATA TABULATION
LEAD ANALYSIS
(NIOSH 7082)

BIOSPHERE

PROJECT NO. _____

CLIENT _____

LOCATION Scrutinatric

FILTER LOT NO. _____

GILIBRATOR /ROTOMETER NO. _____

Biosphere Environmental Services
935 Penn Circle, Suite B610
King of Prussia, PA 19406

Subcontract Laboratory _____

NIOSH PAT Lab I.D. _____

DATE	SAMPLE I.D. NO.	LOCATION DESCRIPTION person / location / work type	PUMP NO.	SAMPLING PERIOD (MILITARY TIME) START	STOP	SAMPLE TIME (MIN.)	CALIBRATION FLOW RATE L/MIN. PRE	POST	SAMPLE VOLUME (LITERS)	wipe area ~~res~~ lt (µg/ft²)	AIRBORNE RESULT (µg/m³)	DETECTION LIMIT	SAMPLED BY	ANALYZED BY
12/3	SCR 12/3 01	pit ~~[illegible]~~ wall								706				
	02	edge pit floor								1940				
	03	3/4 up from pit								538				
	04	floor center								80				
	05	floor outside								34				
	06	floor outside								69				
	07	floor 15' pit								185				
	08	blank								10				

SAMPLE TYPE SUFFIX: B - Field Blank P - Pretest D - During C - Clearance NA - Not Analyzed, obscured due to heavy filter loading

WIPE SAMPLING AND

AIR MONITORING DATA TABULATION
LEAD ANALYSIS
(NIOSH 7082)

BIOSPHERE

PROJECT NO. _____

CLIENT _____

LOCATION _____

FILTER LOT NO. _____

GILIBRATOR /ROTOMETER NO. _____

Biosphere Environmental Services
935 Penn Circle, Suite B610
King of Prussia, PA 19406

Subcontract Laboratory _____

NIOSH PAT Lab I.D. _____

DATE	SAMPLE I.D. NO.	LOCATION DESCRIPTION person / location / work type	PUMP NO.	SAMPLING PERIOD (MILITARY TIME) START	SAMPLING PERIOD (MILITARY TIME) STOP	SAMPLE TIME (MIN.)	CALIBRATION FLOW RATE L/MIN. PRE	CALIBRATION FLOW RATE L/MIN. POST	SAMPLE VOLUME (LITERS)	wipe area result (µg/ft²)	AIRBORNE RESULT (µg/m³)	DETECTION LIMIT	SAMPLED BY	ANALYZED BY
	SCR 12/13 01	Fr pit 2' from floor ~~floor~~ wall								136			GR	CA
	SCR 12/13 02	edge pit floor								16			GR	CA
	SCR 12/13 03	15' from pit floor								32			GR	CA
	SCR 12/13 04	5/4 way up from pit ~~[illegible]~~ floor								4			GR	CA
	SCR 12/13 05	blank								1			GR	CA

SAMPLE TYPE SUFFIX: B - Field Blank P - Pretest D - During C - Clearance NA - Not Analyzed, obscured due to heavy filter loading

HAZARDOUS WASTE OPERATIONS MANAGEMENT
ASBESTOS/ LEAD AIR MONITORING
RESPIRATOR FIT TESTING
EMPLOYEE TRAINING
OSHA MONITORING
LEAD-BASED PAINT TESTING
INDOOR AIR QUALITY STUDIES
ENVIRONMENTAL PHASE I,II,III ASSESSMENTS
BIOSPHERE

Industrial Hygiene Consultants
PAGE 215 305 9526 (24 hours)
FAX/ PHONE 215 265 2098 (8AM - 6PM)
935 Penn Circle Suite B 610 · King of Prussia, Pennsylvania 19406

LEAD ABATEMENT
PROJECT MONITORING
NORTH PENN US ARMY RESERVE CENTER
WORCESTER, PA 19490-9999

EXECUTIVE SUMMARY

The following summary of project objectives were completed:

1) Movable items in range area were removed and decontaminated by HEPA vacuuming and/or wet wiping. In lieu of wipe sampling objective observation of dust on objects determined level of decontamination.
2) Steel bullet deflectors and lights were removed and disposed of as construction debris. HVAC unit dismantled and disposed as constr. deb.
3) All surfaces in area were decontaminated by lead wash procedures.
4) Air testing before, during and following abatement was conducted.
5) OSHA employee sampling was conducted to determine exposure levels.
6) Accoustical wall board was demolished and disposed of as construction debris.
7) Lead contaminated sand was removed and disposed of as hazardous waste.
8) Final clearance wipe samples and air samples were collected (4 wall, 3 floor, 2 ceiling, 2 outside wipe samples/ 3 inside air samples). The following results were noted:
   Round one wipe and air samples collected 12/6/93 as specified in ARMY SOP, see Samples WOR 12/6 01-15. Required air samples were below the standard of 10ug/m^3, see samples WOR 12/6 13,14,15. 4 wipe samples were above standard of 200ug/ft^2. Failed areas tested following recleaning of work area on 12/15/93, see samples WOR 12/15 01-05. 2 areas were above standard. Remaining areas retested following recleaning of work area on 12/21/93, see samples WOR 12/21 01.02. Remaining areas were below the standard of 200 ug/ft^2. Based upon results of random wipe sampling and air sampling the work area is clear for coating/encapsulation.

signed: Michael Hyder, PIH date: 5 JAN 94

CALI

CUMBERLAND ANALYTICAL LABORATORIES, INC.
56 North Second Street - Chambersburg, Pennsylvania 17201
PHONE: (717) 263-5943 FAX: (717) 263-4117

Plymouth Environmental Co., Inc.
2300 Butler Pike, Suite A
Plymouth Meeting, Pa. 19462

CC: Mike Hyder of Biosphere Environmental Services

PAT ID# 17201-002
DER Lab # 28-354
Laboratory Report No.: 93-1613-008 Partial
Date Received: December 7, 1993
Date Completed: December 7, 1993 REVISION

All samples are dissolved and digested in nitric acid prior to final analysis by atomic absorption spectroscopy.

Sample: Job Site: Worcester Army National Guard Center
Collected 12/6/93

Sample	Sample Size liters	Date Collected	Total lead ug/filter	Lead ug/l	Lead ug/m^3
12/6-13	1,200	12/6/93	<5	<0.004	<4
12/6-14	1,200	12/6/93	<5	<0.004	<4
12/6-15	1,200	12/6/93	<5	<0.004	<4

ug = micrograms

Analyst
D.R.

Laboratory Director

Donald R. Richner Jr.

CALI

CUMBERLAND ANALYTICAL LABORATORIES, INC.
56 North Second Street - Chambersburg, Pennsylvania 17201
PHONE: (717) 263-5943 **FAX: (717) 263-4117**

Plymouth Environmental Co., Inc.
2300 Butler Pike, Suite A
Plymouth Meeting, Pa. 19462

CC: Mike Hyder of Biosphere Environmental Services

PAT ID# 17201-002
DER Lab # 28-354
Laboratory Report No.: 93-1613-010 Final
Date Received: December 16, 1993
Date Completed: December 17, 1993

Description	Sample Date	Total Lead ug/Ft²
Horsham		
HOR-12/15-1	12/15/93	24
HOR-12/15-2	12/15/93	58
HOR-12/15-3	12/15/93	272
HOR-12/15-4	12/15/93	410
HOR-12/15-5	12/15/93	160
HOR-12/15-6	12/15/93	34
HOR-12/15-7	12/15/93	49
HOR-12/15-8	12/15/93	41
HOR-12/15-9	12/15/93	120
HOR-12/15-10	12/15/93	59
HOR-12/15-11	12/15/93	552
HOR-12/15-12 BLANK	12/15/93	<10
/		
Worcester		
WOR-12/15-1	12/15/93	148
WOR-12/15-2	12/15/93	212
WOR-12/15-3	12/15/93	796
WOR-12/15-4	12/15/93	40
WOR-12/15-5	12/15/93	<10

Current Hud guidelines have a limit of 200 ug/ft² for floors
500 ug/ft² for Sills
800 ug/ft² for Window Sill Wells

ANALYST
D.R.

Laboratory Director

Donald R. Richner Jr.

CUMBERLAND ANALYTICAL LABORATORIES, INC.
56 North Second Street - Chambersburg, Pennsylvania 17201
PHONE: (717) 263-5943 **FAX: (717) 263-4117**

Plymouth Environmental Co., Inc.
2300 Butler Pike, Suite A
Plymouth Meeting, Pa. 19462

CC: Mike Hyder of Biosphere Environmental Services

PAT ID# 17201-002
DER Lab # 28-354
Laboratory Report No.: 93-1613-011 **Final**
Date Received: December 23, 1993
Date Completed: December 27, 1993

Description	Sample Date	Total Lead ug/Ft²
Horsham		
HOR-12/21-01	12/21/93	354
HOR-12/21-02	12/21/93	22
HOR-12/21-03	12/21/93	95
Worcester		
WOR-12/21-01	12/21/93	38
WOR-12/21-02	12/21/93	48

Current Hud guidelines have a limit of 200 ug/ft² for floors
500 ug/ft² for Sills
800 ug/ft² for Window Sill Wells

ANALYST
D.R.

Laboratory Director

Donald R. Richner Jr.

WIPE SAMPLING AND

AIR MONITORING DATA TABULATION
LEAD ANALYSIS
(NIOSH 7082)

BIOSPHERE

PROJECT NO. _____

CLIENT Plymouth

LOCATION North Penn Army Nat'l Guard

FILTER LOT NO. Romm 36325

GILIBRATOR /ROTOMETER NO. HF903

Biosphere Environmental Services
935 Penn Circle, Suite B610
King of Prussia, PA 19406

Subcontract Laboratory Cumberland Analytical

NIOSH PAT Lab I.D. _____

DATE	SAMPLE I.D. NO.	LOCATION DESCRIPTION person / location / work type	PUMP NO.	SAMPLING PERIOD (MILITARY TIME) START	STOP	SAMPLE TIME (MIN.)	CALIBRATION FLOW RATE L/MIN. PRE	POST	SAMPLE VOLUME (LITERS)	wipe area result (µg/ft²)	AIRBORNE RESULT (µg/m³)	DETECTION LIMIT	SAMPLED BY	ANALYZED BY
12/6 93	WOR 12/6 01	Floor center wipe								*291			MH	CK
	02	Floor at pit "								*207				
	03	Floor 20' from pit "								148				
	04	Wall E. 7' up "								<10				
	05	Wall W at pit by exit "								*766				
	06	Wall S. at decon 2' up "								38				
	07	Wall N under window 8' up "								91				
	08	Ceiling at louvers								*338				
	09	Ceiling edge pit center								96				
	10	outside work area								42				
	11	outside work area								52				
	12	blank wipe								<10				
	WOR 12/6 13	Final Air at pit	HF18	0910	1110	120	10.0	10.0	1200		<.004		MH	CK
	WOR 12/6 14	Final Air at pit	HF22	0910	1110	120	10.0	10.0	1200		<.004		MH	CK
12/6 93	WOR 12/6 15	Final Air near decon	HF04	0910	1110	120	10.0	10.0	1200		<.004		MH	CK

SAMPLE TYPE SUFFIX: B - Field Blank P - Pretest D - During C - Clearance NA - Not Analyzed, obscured due to heavy filter loading

WIPE SAMPLING AND

AIR MONITORING DATA TABULATION
LEAD ANALYSIS
(NIOSH 7082)

BIOSPHERE

PROJECT NO. _____

CLIENT _____

LOCATION ~~Hoe~~ Worcester ANG

FILTER LOT NO. _____

GILIBRATOR /ROTOMETER NO. _____

Biosphere Environmental Services
935 Penn Circle, Suite B610
King of Prussia, PA 19406

Subcontract Laboratory _____

NIOSH PAT Lab I.D. _____

DATE	SAMPLE I.D. NO.	LOCATION DESCRIPTION person / location / work type	PUMP NO.	SAMPLING PERIOD (MILITARY TIME) START	STOP	SAMPLE TIME (MIN.)	CALIBRATION FLOW RATE L/MIN. PRE	POST	SAMPLE VOLUME (LITERS)	Wipe area result (µg/ft²)	AIRBORNE RESULT (µg/m³)	DETECTION LIMIT	SAMPLED BY	ANALYZED BY
	WOR 12/15 01	Floor center								148				
	02	Floor at pit								212				
	03	Wall at exit 7' up								796				
	04	Ceiling at lowers								40				
	05	Hank								<10				

WIPE SAMPLING AND

AIR MONITORING DATA TABULATION
LEAD ANALYSIS
(NIOSH 7082)

BIOSPHERE

PROJECT NO. _____

CLIENT _____

LOCATION _____

FILTER LOT NO. _____

GILIBRATOR /ROTOMETER NO. _____

Biosphere Environmental Services
935 Penn Circle, Suite B610
King of Prussia, PA 19406

Subcontract Laboratory _____

NIOSH PAT Lab I.D. _____

DATE	SAMPLE I.D. NO.	LOCATION DESCRIPTION person / location / work type	PUMP NO.	SAMPLING PERIOD (MILITARY TIME) START	STOP	SAMPLE TIME (MIN.)	CALIBRATION FLOW RATE L/MIN. PRE	POST	SAMPLE VOLUME (LITERS)	wipe area result (µg/ft²)	AIRBORNE RESULT (µg/m³)	DETECTION LIMIT	SAMPLED BY	ANALYZED BY
12/21	HOR 12/21 01	Floor inside entrance								559				
	HOR 12/21 02	rear wall 1/2 way up								77				
	HOR 12/21 03	outside floor at rear exit								[illegible]				
	WOR 12/21 01	Floor at pit								54				
	02	Wall at exit 7' up								46				

SAMPLE TYPE SUFFIX: B - Field Blank P - Pretest D - During C - Clearance NA - Not Analyzed, obscured due to heavy filter loading

HAZARDOUS WASTE OPERATIONS MANAGEMENT
ASBESTOS/ LEAD AIR MONITORING
RESPIRATOR FIT TESTING
EMPLOYEE TRAINING
OSHA MONITORING
LEAD-BASED PAINT TESTING
INDOOR AIR QUALITY STUDIES
ENVIRONMENTAL PHASE I,II,III ASSESSMENTS
BIOSPHERE

Industrial Hygiene Consultants
PAGE 215 305 9526 (24 hours)
FAX/ PHONE 215 265 2098 (8AM - 6PM)
935 Penn Circle Suite B 610 · King of Prussia, Pennsylvania 19406

LEAD ABATEMENT
PROJECT MONITORING
HORSHAM MEMORIAL US ARMY RESERVE CENTER
HORSHAM, PA 19044-3399

EXECUTIVE SUMMARY

The following summary of project objectives were completed:

1) Movable items in range area were removed and decontaminated by HEPA vacuuming and/or wet wiping. In lieu of wipe sampling objective observation of dust on objects determined level of decontamination.
2) Steel bullet deflectors and lights were removed and disposed of as construction debris.
3) All surfaces in area were decontaminated by lead wash procedures.
4) Air testing before, during and after abatement was conducted inside and outside work area.
5) OSHA employee sampling was conducted to determine exposure levels.
6) Lead contaminated sand was removed and disposed of as hazardous waste.
7) Final clearance wipe and air samples were collected (4 wall, 3 floor, 2 ceiling, 2 outside wipe samples/ 3 inside air samples).
   The following results were noted:
   Round one wipe and air samples were collected 12/15/93 as specified in ARMY SOP following abatement, see samples HOR 12/15 1-15. Required air samples were below the standard of 10 ug/m^3, see samples HOR 12/15 13,14,15. 3 wipe samples are above standard of 200 ug/ft^2, see samples HOR 12/15 3,4,11. Failed areas retested following recleaning of work area on 12/21, see samples HOR 12/21 01-03. 1 sample was above standard, see sample HOR 12/21 01. The remaining area was retested following recleaning on 12/29/93, see sample HOR 12/29 01. Remaining sample was below the standard of 200 ug/ft^2. Based upon results of random wipe and air sampling the work area is clear for coating/encapsulation.

signed: Michael Hyder, PIH date: 5 JAN 94

CALI

CUMBERLAND ANALYTICAL LABORATORIES, INC.
56 North Second Street - Chambersburg, Pennsylvania 17201
PHONE: (717) 263-5943 FAX: (717) 263-4117

Plymouth Environmental Co., Inc.
2300 Butler Pike, Suite A
Plymouth Meeting, Pa. 19462

CC: Mike Hyder of Biosphere Environmental Services

PAT ID# 17201-002
DER Lab # 28-354
Laboratory Report No.: 93-1613-010 Final
Date Received: December 16, 1993
Date Completed: December 17, 1993

Description	Sample Date	Total Lead ug/Ft²
Horsham		
HOR-12/15-1	12/15/93	24
HOR-12/15-2	12/15/93	58
HOR-12/15-3	12/15/93	272
HOR-12/15-4	12/15/93	410
HOR-12/15-5	12/15/93	160
HOR-12/15-6	12/15/93	34
HOR-12/15-7	12/15/93	49
HOR-12/15-8	12/15/93	41
HOR-12/15-9	12/15/93	120
HOR-12/15-10	12/15/93	59
HOR-12/15-11	12/15/93	552
HOR-12/15-12 BLANK	12/15/93	<10
/		
Worcester		
WOR-12/15-1	12/15/93	148
WOR-12/15-2	12/15/93	212
WOR-12/15-3	12/15/93	796
WOR-12/15-4	12/15/93	40
WOR-12/15-5	12/15/93	<10

Current Hud guidelines have a limit of 200 ug/ft² for floors
500 ug/ft² for Sills
800 ug/ft² for Window Sill Wells

ANALYST
D.R.

Laboratory Director

Donald R. Richner Jr.

CALI

CUMBERLAND ANALYTICAL LABORATORIES, INC.
56 North Second Street - Chambersburg, Pennsylvania 17201
PHONE: (717) 263-5943 FAX: (717) 263-4117

Plymouth Environmental Co., Inc.
2300 Butler Pike, Suite A
Plymouth Meeting, Pa. 19462

CC: Mike Hyder of Biosphere Environmental Services

PAT ID# 17201-002
DER Lab # 28-354
Laboratory Report No.: 93-1613-010 Final
Date Received: December 16, 1993
Date Completed: December 17, 1993 REVISION

All samples are dissolved and digested in nitric acid prior to final analysis by atomic absorption spectroscopy.

Sample: Job Site: Horsham Army National Guard Center
Collected 12/15/93

Sample	Sample Size liters	Date Collected	Total lead ug/filter	Lead ug/l	Lead ug/m³
12/15-13	650	12/15/93	<5	<0.008	<8
12/15-14	650	12/15/93	<5	<0.008	<8
12/15-15	650	12/15/93	<5	<0.008	<8

ug = micrograms

Analyst
D.R.

Laboratory Director

Donald R. Richner Jr.

CUMBERLAND ANALYTICAL LABORATORIES, INC.
56 North Second Street - Chambersburg, Pennsylvania 17201
PHONE: (717) 263-5943 **FAX: (717) 263-4117**

Plymouth Environmental Co., Inc.
2300 Butler Pike, Suite A
Plymouth Meeting, Pa. 19462

CC: Mike Hyder of Biosphere Environmental Services

PAT ID# 17201-002
DER Lab # 28-354
Laboratory Report No.: 93-1613-011 Final
Date Received: December 23, 1993
Date Completed: December 27, 1993

Description	Sample Date	Total Lead ug/Ft²
Horsham		
HOR-12/21-01	12/21/93	354
HOR-12/21-02	12/21/93	22
HOR-12/21-03	12/21/93	95
Worcester		
WOR-12/21-01	12/21/93	38
WOR-12/21-02	12/21/93	48

Current Hud guidelines have a limit of 200 ug/ft² for floors
500 ug/ft² for Sills
800 ug/ft² for Window Sill Wells

ANALYST
D.R.

Laboratory Director

Donald R. Richner Jr.

CALI

CUMBERLAND ANALYTICAL LABORATORIES, INC.
56 North Second Street - Chambersburg, Pennsylvania 17201
PHONE: (717) 263-5943 **FAX: (717) 263-4117**

Plymouth Environmental Co., Inc.
2300 Butler Pike, Suite A
Plymouth Meeting, Pa. 19462

CC: Mike Hyder of Biosphere Environmental Services

PAT ID# 17201-002
DER Lab # 28-354
Laboratory Report No.: 94-1613-001 Final
Date Received: January 12, 1994
Date Completed: January 12, 1994

Description	Sample Date	Total Lead ug/Ft²
Horsham		
Floor Inside Work Area HOR-12/29-01	12/29/93	54
Blank HOR-12/29-02	12/29/93	<10

Current Hud guidelines have a limit of 200 ug/ft² for floors
500 ug/ft² for Sills
800 ug/ft² for Window Sill Wells

ANALYST
D.R.

Laboratory Director

Donald R. Richner Jr.

WIPE SAMPLING AND

AIR MONITORING DATA TABULATION
LEAD ANALYSIS
(NIOSH 7082)

BIOSPHERE

PROJECT NO. _____

CLIENT _____

LOCATION Horsham

FILTER LOT NO. _____

CALIBRATOR /ROTOMETER NO. _____

Biosphere Environmental Services
935 Penn Circle, Suite B610
King of Prussia, PA 19406

Subcontract Laboratory _____

NIOSH PAT Lab I.D. _____

DATE	SAMPLE I.D. NO.	LOCATION DESCRIPTION person / location / work type	PUMP NO.	SAMPLING PERIOD (MILITARY TIME) START	STOP	SAMPLE TIME (MIN.)	CALIBRATION FLOW RATE L/MIN. PRE	POST	SAMPLE VOLUME (LITERS)	Wipe area result (µg/ft²)	AIRBORNE RESULT (µg/m³)	DETECTION LIMIT	SAMPLED BY	ANALYZED BY
	HOR 12/15 01	Floor at edge pit (Center of Room 5 steps out)								24			GR	
	02	Floor 1/2 way								58			GR	
	03	Floor OUTSIDE ENTRANCE							*	272			GR	
	04	wall REAR WALL AT PIT (1/2 way up on Rear)							*	410			GR	
	05	wall Rt side Next to Copper Pipes (Shoulder ht)								160			GR	
	06	wall Lt side 1/2 way (Below Elec. outlet)								34			GR	
	07	wall ABOVE DOORWAY (Backwall)								49			GR	
	08	ceiling Center of Room								41			GR	
	09	ceiling NR PIT Lt Side								120			GR	
	10	outside Floor outside Ent.								59			GR	
	11	outside Floor AT AIR Exh.							*	552			GR	
	12	blank								<10			GR	
	13	inside work area air AT PIT		0835	0940	65				~~410~~	410		GR	
	14	inside work area air Lt Side		0835	0940	65				~~410~~	410		GR	
	15	inside work area air Rt SIDE		0835	0940	65					410		GR	

SAMPLE TYPE SUFFIX: B - Field Blank P - Pretest D - During C - Clearance NA - Not Analyzed, obscured due to heavy filter loading

WIPE SAMPLING AND

AIR MONITORING DATA TABULATION
LEAD ANALYSIS
(NIOSH 7082)

PROJECT NO. _____

CLIENT _____

LOCATION _____

FILTER LOT NO. _____

GILIBRATOR /ROTOMETER NO. _____

Biosphere Environmental Services
935 Penn Circle, Suite B610
King of Prussia, PA 19406

BIOSPHERE

Subcontract Laboratory _____

NIOSH PAT Lab I.D. _____

DATE	SAMPLE I.D. NO.	LOCATION DESCRIPTION person / location / work type	PUMP NO.	SAMPLING PERIOD (MILITARY TIME) START	STOP	SAMPLE TIME (MIN.)	CALIBRATION FLOW RATE L/MIN. PRE	POST	SAMPLE VOLUME (LITERS)	wipe area result (µg/ft²)	AIRBORNE RESULT (µg/m³)	DETECTION LIMIT	SAMPLED BY	ANALYZED BY
12/21	HOR12/21 01	Floor inside entrance								354				
	HOR12/21 02	rear wall 1/2 way up								72				
	HOR12/21 03	outside floor at rear exit								95				
	WOR 12/21 01	floor at pit								38				
	02	Wall at exit 7' up								48				

SAMPLE TYPE SUFFIX: B - Field Blank P - Pretest D - During C - Clearance NA - Not Analyzed, obscured due to heavy filter loading

LOCATION Horsham Army Nat'l Guard

FILTER LOT NO.

GILIBRATOR /ROTOMETER NO.

BIOSPHERE INC.
935 Penn Circle, Suite B610
King of Prussia, PA 19406

Subcontract Laboratory

NIOSH PAT Lab I.D.

DATE	SAMPLE I.D. NO.	LOCATION DESCRIPTION person / location / work type	PUMP NO.	SAMPLING PERIOD (MILITARY TIME) START	SAMPLING PERIOD (MILITARY TIME) STOP	SAMPLE TIME (MIN.)	CALIBRATION FLOW RATE L/MIN. PRE	CALIBRATION FLOW RATE L/MIN. POST	SAMPLE VOLUME (LITERS)	wipe area result (µg/ft²)	AIRBORNE RESULT (µg/m³)	DETECTION LIMIT	SAMPLED BY	ANALYZED BY
12/29	HOR12/29 01	Floor IWA								54				
	HOR14 29 03	Blank								<10				

SAMPLE TYPE SUFFIX: B - Field Blank P - Pretest D - During C - Clearance NA - Not Analyzed, obscured due to heavy filter loading

WIPE SAMPLING AND
AIR MONITORING DATA TABULATION
AND ANALYSIS

BIOSPHERE

US Army Corps
of Engineers
Baltimore District

79th Army Reserve Command Cultural Resource Management Plan

Prepared for:	79th Army Reserve Command
Prepared under contract to:	U.S. Army Corps of Engineers, Baltimore District (Contract No. DACW31-89-D-0054) Delivery Order No. 32
Prepared by:	KFS Historic Preservation Group Kise Franks & Straw Inc. Philadelphia, Pennsylvania
In Association with:	Hunter Research, Inc. Trenton, New Jersey

July 1995

IV. INVENTORY

A. Introduction

This chapter describes the process by which historic architectural resources and archeological site potential were identified and evaluated. Background research and site visits were conducted for each of the thirty-two facilities. The information derived from these tasks is presented on the facility data forms in Appendix C. Data entered on the forms include a research checklist of records examined, information on previous assessments, results of the current survey, and a summary description of the facility and its surroundings. The site visits were divided among three organizations: the Army Corps of Engineers, Baltimore District (ACOE), Hunter Research, Inc. (HRI), and Kise Franks & Straw (KFS).

B. Historic Architectural Resources

No historic architectural resources were identified at any of the thirty-two facilities. Facility construction dates range from 1951 to 1994. A large percentage of the facilities consist of two buildings, the reserve center and maintenance shop. Facility architecture is utilitarian, consisting of, for the most part, one and two-story rectangular brick and/or concrete block buildings with metal windows and built-up roofing. Architectural resources should be evaluated for the National Register when they attain fifty years of age.

Three of the facilities (Bristol, Edgemont, and Worcester) were established on the site of former Nike missile facilities. Most of the buildings and structures associated with the missile program were removed after the Nike program was terminated in the 1960s. In general, the only vestiges of the Nike tenancy at the facilities are underground storage silos, sewage treatment plants, and utility systems, such as sanitary sewer, storm sewer, electrical lines, water lines, and water well. In some instances, the storage silos have been converted to fire protection water storage or have been backfilled with building demolition debris. The large loss of buildings precludes these facilities from being considered significant as representatives of the Nike program. Nevertheless, the Pennsylvania SHPO only considers resources that are fifty years or older, thereby precluding resources related to the Cold War, such as the Nike missile program.[1]

Although there are no eligible or potentially eligible resources on the facilities, there are adjacent or surrounding resources, namely buildings and districts, that may fall within an undertaking's area of potential effects. Adjacent resources at Bellefonte, Edgemont, and Gettysburg were previously listed on the National Register of Historic Places. In the course of field survey for the preparation of this plan, potentially eligible resources were identified neighboring the Chester and Harrisburg facilities. Facility managers should be cognizant of these issues when planning an undertaking. The specific resources are the following:

Bellefonte: Bellefonte Armory, located east of the facility, is listed on the National Register of Historic Places (NRHP).

Chester: Bell Mansion, located northeast of the facility, appears potentially eligible for the NRHP.

---

[1]U.S. Department of Defense, Legacy Cold War Project, *Coming in from the Cold; Military Heritage in the Cold War* (Washington, 1994), 59.

Edgemont: Ridley Creek State Park Historic District, located south of the facility, is listed on the NRHP.

Gettysburg: Facility is located in the Gettysburg Historic District, listed on the NRHP.

Harrisburg: Facility is located in a residential district that appears potentially eligible for the NRHP.

C. Archeological Site Potential

Background research at the Bureau for Historic Preservation (BHP) in Harrisburg and pedestrian reconnaissance surveys of the thirty-two facilities revealed that eight of the facilities appear to have archeological site potential. Seven of the facilities are considered to have low archeological potential: Ashley, Edgemont, Gettysburg, Schuylkill Haven, State College, West Hazleton, Williamsport. Greencastle is considered to have high archeological potential. All of the facilities except Schuylkill Haven are considered to have prehistoric archeological potential. Schuylkill Haven, Greencastle and Gettysburg are considered to have historic archeological potential.

Phase 1b testing should be undertaken at facilities considered to have archeological site potential. The Phase 1b survey constitutes the next step in the determination of eligibility process. The Phase 1b results will determine if the specific location appears eligible for inclusion in the National Register of Historic Places. Appendix E contains archeological procedures for reference if archeological resources are discovered at any of the facilities, including those considered to have no potential.

The following summaries provide a fuller description of the nature of archeological potential at the facilities. The facilities are arranged by study units and references to quadrangle maps refer to archeological maps on file at the BHP.

<u>Pennsylvania Study Unit I-- Piedmont and Coastal Plain</u>:

Bristol: No archeological sites have been identified in the vicinity of the facility. A Phase I archeological survey (G on the U.S.G.S. Beverly quadrangle map) has been undertaken, and no archeological sites were found.

Chester: Survey records maintained by the Bureau for Historic Preservation in Harrisburg indicate that an archeological site (36DE30) containing 19th and 20th century artifacts is located near the facility.

Edgemont: Archeological site survey records maintained by the Bureau for Historic Preservation in Harrisburg indicate that three prehistoric sites in Delaware County (36DE15, 16 and 17) and two undefined sites in Chester County (36CH120 and 276) lie in the vicinity of the facility. The Delaware County sites yielded lithics and ceramics, the latter indicative of Woodland occupation. An 18th-century farmstead is located to the north of the facility. The facility is considered to have low archeological potential.

Germantown: Two archeological sites -- the Gardette Site (36PH50) and the Atwater Kent Factory Site (36PH51) -- are located in the vicinity of the facility.

Gettysburg: No archeological sites are known in the immediate vicinity, but an area of medium potential for prehistoric occupation was identified near wetlands in the southwest corner of the facility. Since the facility occupies a portion of the site of the Battle of

Gettysburg, the presence of Civil War artifacts within the property boundaries seems likely. The facility is considered to have low archeological potential.

Horsham: No archeological sites have been identified in the vicinity of the facility. An 18th-century structure stands to the south.

Lancaster: Archeological site survey records indicate that numerous prehistoric sites may be found in the vicinity of the facility. The sites (36LA421-423, 36LA655-680) are open-air loci yielding lithic artifacts.

Marcus Hook: No archeological sites have been identified in the vicinity of the facility. Since the entire site was constructed on fill placed along the Delaware River bank after 1870, no archeological sites are present within this fill. It should be noted, however, that deep excavations may encounter old river bottom with the potential for prehistoric and historic maritime artifacts.

Norristown: No archeological sites have been identified in the vicinity of the facility.

Willow Grove: No archeological sites have been identified in the vicinity of the facility.

Philadelphia (Woodhaven): No archeological sites have been identified in the vicinity of the facility.

Worcester: No archeological sites have been identified in the vicinity of the facility.

York: No archeological sites have been identified in the vicinity of the facility.

Pennsylvania Study Unit II-- Ridge and Valley:

Ashley: No archeological sites have been identified within the immediate vicinity of the facility. The presence of a wetland to the west of the facility suggests that evidence of prehistoric occupation could be found, but grading and filling throughout most of the facility have probably removed most of that potential. The facility is considered to have low archeological potential.

Bellefonte: No archeological sites have been identified in the immediate vicinity of the facility.

Bethlehem: No archeological sites have been identified in the vicinity of the Bethlehem facility.

Bloomsburg: No archeological sites have been identified in the vicinity of the facility. An archeological survey (D on the U.S.G.S. Bloomsburg quadrangle map) has been undertaken, but the report which described that survey was not available for study at the Bureau for Historic Preservation in Harrisburg.

Chambersburg: No archeological sites have been located in the vicinity of the facility.

Greencastle: A review of the Pennsylvania Archeological Site Survey files in Harrisburg indicates that numerous prehistoric sites (36FR205-222) may be found in the general vicinity of the facility. These sites date from the Early Archaic to the Late Woodland periods and have yielded lithic projectile points and other tools, ceramics, pipe fragments, a shell bead, and possibly human bone. The occupants of these sites utilized the local rhyolite outcrops for lithic raw material almost exclusively.

The northern fenced portion of the facility appears to be completely disturbed, but the southern wooded portion contains rhyolite outcrops, and one shovel test excavation yielded a prehistoric rhyolite flake. A surface scatter of historic artifacts is also present in the southern portion. The facility is considered to have high archeological potential.

Harrisburg: No archeological sites have been located in the vicinity of the facility.

Lewisburg: The Pennsylvania SHPO has previously determined the Lewisburg facility contained no archeological potential and did not warrant archeological survey (see Appendix B).

Lewistown: No archeological sites have been located in the immediate vicinity of the facility.

New Cumberland: One prehistoric archeological site is located north of the facility on the Susquehanna River. There are no archeological sites in the general vicinity of the reserve center.

Reading: The Pennsylvania SHPO has previously determined the Reading facility contained no archeological potential and did not warrant archeological survey (see Appendix B).

Schuylkill Haven: The facility is located on or near the site of a late 19th-early 20th century almshouse. The site of a cemetery associated with the almshouse is reportedly immediately beyond the western boundary fence of the facility. No archeological sites are indicated in the vicinity of the facility. The facility is considered to have low archeological potential.

Scranton: A series of prehistoric rock shelters (36LW008) are located in the general vicinity of the facility. No specific temporal affiliations were indicated in the Pennsylvania Archeological Site Survey files.

State College: Three prehistoric sites (36CE281, 336 and 337) are located in the immediate vicinity of the facility. The sites, ranging in date from Early to Late Archaic, contain jasper flakes and chert projectile points. The proximity of these sites suggests evidence of prehistoric occupation may have existed within the boundaries of the facility, although construction associated with the buildings and parking areas have resulted in a certain degree of disturbance. The facility is considered to have low archeological potential.

West Hazleton: Pennsylvania Archeological Site Survey records in Harrisburg record that a prehistoric shell midden with associated pottery indicative of Woodland occupation (36LU175) is located near the facility. A historic site related to a 19th-20th century building (36LU126) is also located in the vicinity. The facility is considered to have low archeological potential.

Wilkes-Barre (Highway 315): No archeological sites have been recorded for the immediate vicinity of the facility.

Wilkes-Barre (AMSA #32, 100 Stephens Road): No archeological sites have been recorded for the immediate vicinity of the facility.

Williamsport: No archeological sites have been reported for the vicinity of the facility. The proximity of Miller's Run Creek, which forms the northern and eastern boundary of the facility, suggests that evidence of prehistoric occupation may be found within the grounds of the facility. The facility is considered to have low archeological potential.

Pennsylvania Study Unit III-- Appalachian Plateau:

Lock Haven: The Pennsylvania SHPO has previously determined the Lock Haven facility contained no archeological potential and did not warrant archeological survey (see Appendix B).

U.S. Army Reserve
Integrated Cultural Resources Management Plan
Historic Properties Component
99th Regional Support Command
Pennsylvania

PREFACE:

ACKNOWLEDGEMENTS

Project ID:	**F44650-99-D-005**
HQ USAR POC:	**Mr. George Gricius**
HQ USAR Technical POC:	**Ms. Carrie Walker**
HQ USAR Native American Coordination Technical POC:	**Mr. Dell Greek**
USACE Mobile District Technical Manager:	**Mr. Ernie Seckinger**
Developed by:	**Conservation Branch**
Environmental Quality Division	
Aberdeen Proving Grounds, MD	
RSC POC:	**Mr. Bruce Kish**
Compiled by Parsons, Inc.:	**Brian Crane**
	Susan Bupp
	Julie Abell Horn
	Emily Williamson

This Integrated Cultural Resources Management Plan (ICRMP) was developed under a project initiated by LTC Michael Hlady in 2000 while he served as the USARC Environmental Chief. The aim of the project was to develop ICRMPs that were consistent across all of the USAR installations and Regional Support Commands. LTC Hlady's perseverance in large measure made this project possible.

TABLE OF CONTENTS

PREFACE: ACKNOWLEDGEMENTS i
TABLE OF CONTENTS ii
HISTORIC PROPERTIES COMPONENT 1
1.0 OVERVIEW 1
2.0 99TH RSC MISSION(S) AND EFFECTS 2
2.1 Past Missions 2
2.2 Present Mission 2
3.0 PLANNING LEVEL SURVEY (PLS) 5
3.1 Methods 6
3.2 Installation Contexts for Physical Environment 6
3.3 Past Research and Data Quality 28
3.4 Historic Properties Inventory 31
3.5 Historical Contexts 34
3.6 Cultural Resources Sensitivity Assessments and Predictive Models 52
3.7 Cultural Resource Program Development Schedule 53
3.8 Consulting and Interested Parties 54
4.0 CATEGORIZED UNDERTAKINGS 55
4.1 Summary of Undertaking Categories 55
4.2 Proposed Individual Undertakings 56
5.0 EXEMPT UNDERTAKINGS 56
6.0 EMERGENCY ACTIONS FOR IN-PLACE ORDNANCE DISPOSAL 57
7.0 NHPA SECTION 106 COMPLIANCE 57
7.1 Overview 58
8.0 SECTION 106 PROCESS 60
8.1 Section 106 Review Policy 60
8.2 Section 106 Review Procedures 61

HPC SOP 1: IDENTIFYING UNDERTAKINGS AND DEFINING APE(S) 65
HPC SOP 2: PLANNING STAGE ACTIVITIES 67
HPC SOP 3: IDENTIFYING HISTORIC PROPERTIES 68
HPC SOP 4: EVALUATING HISTORIC PROPERTIES 75
HPC SOP 5: SECTION 106 ANNUAL REPORTING PROCEDURES 91
HPC SOP 6: REPORTING DAMAGE TO HISTORIC PROPERTIES 93
HPC SOP 7: ASSESSING ADVERSE EFFECTS 94
HPC SOP 8: REVIEW OF ALTERNATIVES FOR UNDERTAKINGS THAT WOULD ADVERSELY AFFECT HISTORIC PROPERTIES IF IMPLEMENTED 96
HPC SOP 9: MITIGATION PROCEDURES 101
HPC SOP 10: PROTECTION OF ARCHAEOLOGICAL SITES 106
HPC SOP 11: INADVERTENT DISCOVERY OF ARCHAEOLOGICAL DEPOSITS 107
HPC SOP 12: SECTION 106 PROCEDURES FOR NATIONAL HISTORIC LANDMARKS 110

HPC APPENDIX A: ARCHAEOLOGICAL SITES AND SITE ATTRIBUTES 114
HPC APPENDIX B: PROPERTIES OF TRADITIONAL, RELIGIOUS AND CULTURAL SIGNIFICANCE 116
HPC APPENDIX C: SAMPLE DOCUMENTS 117
Letter Documenting That Historic Properties Have Been Found 117
"Two-Party" Memorandum Of Agreement For Data Recovery 118
Nhpa Section 106 (36 Cfr 800) Recommended Approach For Consultation On Recovery Of Significant Information From Archaeological Sites 126
Memorandum Of Understanding Regarding Inadvertent Discovery And Intentional Excavation Of Archaeological Material 131
Scope Of Services 136
Letter Reporting No Historic Properties Affected 150
Letter Notifying Shpo Of Proposed Project In Accordance With Section 106 151

Sample Tribe Notification Letter 152
Annual Report Example 153
HPC APPENDIX D: SECRETARY OF INTERIOR'S STANDARDS FOR TREATMENT OF HISTORIC STRUCTURES 154
HPC APPENDIX E: HPC BIBLIOGRAPHY 158
HPC APPENDIX F: TOPOGRAPHIC MAPS 166
HPC APPENDIX G: GLOSSARY 232
HPC APPENDIX H: DRAFT ICRMP ENVIRONMENTAL ASSESSMENT, FINDING OF NO SIGNIFICANT IMPACT, AND SCOPING LETTER 240

LIST OF TABLES

Table 3.2-1: Locational Information for 99th RSC Facilities within Pennsylvania 8
Table 3.4-1: List of Buildings, Structures, and Objects at 99th RSC Facilities in Pennsylvania 33
Table 3.7-1: Schedule of Anticipated Archaeological Investigations 53
Table 3.8-1: Contact Information for Consulting Parties 54
Table 4.2-1: List of Proposed Individual Undertakings 56

LIST OF FIGURES

Figure 3.2-1 Location of 99th RSC Facilities in Pennsylvania 15
Figure 3.2-2 Geology, Pennsylvania 17
Figure 3.2-3 Natural Regions of Pennsylvania 20
Figure 3.2-4 Major Regions and Soil Associations in Pennsylvania 22
Figure 3.2-5 Land Cover and Watersheds in Pennsylvania 27

HISTORIC PROPERTIES COMPONENT

1.0 OVERVIEW

The Historic Properties Component (HPC) is the portion of the Integrated Cultural Resources Management Plan (ICRMP) that relates to compliance with Section 106 of the National Historic Preservation Act (NHPA). Section 106 of the NHPA requires Federal agencies to take into account the effects of their undertakings on historic properties and afford the Advisory Council on Historic Preservation (ACHP) a reasonable opportunity to comment on such undertakings. The Section 106 process seeks to accommodate historic preservation concerns with the needs of Federal undertakings through consultation between the Army and Section 106 participants. The HPC sets standards and guidelines that the 99th Regional Support Command (RSC) will follow in its management of historic properties and provides procedures for determining and resolving the effects of undertakings on such properties. The purpose of the HPC of this ICRMP is to enable compliance with Section 106 on a programmatic, as opposed to case-by-case basis. As the only section of the ICRMP that is subject to outside regulatory review and approval, the HPC is designed in both format and content to be reviewed as a stand-alone document, separate from the body of the ICRMP.

The HPC is composed of three organizational elements: background data, standard operating procedures and appendices. The background data includes: discussions related to the 99th RSC's mission and activities; a body of information that is referred to as the "Planning Level Survey (PLS);" and an outline of the entire Section 106 process. The PLS presents what is presently known about the 99th RSC's natural and cultural environment and forms the basis for management decisions concerning historic properties. The Section 106 process is discussed in both general terms, and in outline format with references at various steps to Standard Operating Procedures (SOPs) that provide more detail. The appendices contain sensitive documents such as lists of historic properties, and elaborative materials such as sample letters and documents.

SOPs are the systematic actions that the 99th RSC will follow to consider the effects of its activities on historic properties and to manage them responsibly. The following is a list of the SOPs included within the HPC followed by a description of what the SOP accomplishes and when it will be used.

HPC SOP 1: Identifying Undertakings and Defining Area of Potential Effect(s) APE(s). This SOP provides a method to determine whether a project qualifies as an undertaking and to define its area of potential effect.

HPC SOP 2: Planning Stage Activities. This SOP will be used to determine whether an identification survey is required for an APE.

HPC SOP 3: Identifying Historic Properties. This SOP contains procedures for qualified professionals to use in the identification of historic properties with specific methods for identifying archaeological sites, historic buildings and properties of traditional, religious and cultural importance.

HPC SOP 4: Evaluating Historic Properties. This SOP contains procedures for qualified professionals to use in the evaluation of historic properties, with specific methods for evaluating archaeological sites, historic buildings and properties of traditional, religious and cultural importance.

HPC SOP 5: Annual Reporting Procedures. The Programmatic Agreement (PA) implementing this HPC specifies that an annual report covering all routine cultural resources activities will be sent to the Pennsylvania Historical and Museum Commission (PHMC), Bureau for Historic Preservation (BHP) (which functions as the State Historic Preservation Office, or SHPO), replacing previous case-by-case documentation. This SOP provides details and procedures for preparing the annual report.

HPC SOP 6: Reporting Damage to Historic Properties. When historic properties are damaged or destroyed through failure of routine administrative controls or proper monitoring of project activities, this SOP provides a mechanism for reporting the damage to the PHMC (SHPO).

Table 3.2-1: Locational Information for 99th RSC Facilities within Pennsylvania

Facility ID	Facility Name and Location	County	Region	No. of Bldgs	Square feet	Area	Ownership	Date**
PA002	North Hills USARC 9225 Peebles Road Allison Park, PA 15101-1926	Allegheny	Appalachian Plateau	4	16,733	11.15 acres	USAR	1955
PA003	CPL Harry R. Harr USARC/S-S 3001 Pleasant Valley Boulevard Altoona, PA 16602-4499	Blair	Ridge and Valley	3	26,667	3 acres	USAR	1959
PA004	Chaplain LJ Sabalis Memorial USARC 140 Stewart Road Ashley, PA 18706-1463	Luzerne	Ridge and Valley	2	48,293	19.91 acres	USAR	1979
PA005	Beaver Falls AFRC 150 Janet Street Beaver Falls, PA 15010-1004	Beaver	Appalachian Plateau	2	10,088 for one, other N/A		Permit	1987
PA007	SGT Paul Beck AFRC 987 East Bishop Street Bellefonte, PA 16823-2399	Centre	Ridge and Valley	2	20,811	3.53 acres	USAR	1960
PA008	Wilson-Kramer USARC 2940 Airport Road Bethlehem, PA 18017-2166	Lehigh	Ridge and Valley	3	29,124	5 acres	USAR	1961
PA009	Bloomsburg USARC 1469 Old Berwick Road Bloomsburg, PA 17815-3027	Columbia	Ridge and Valley	2	5,721	2 acres	USAR	1965
PA010	Bristol Veterans Memorial USARC 2501 Ford Road Bristol, PA 19007-6898	Bucks	Coastal Plain	2	39,049	16.46 acres	USAR	1974
PA011	Brookville Memorial USARC 20 Spruce Street Brookville, PA 15825-1630	Jefferson	Appalachian Plateau	3	28,023	3.56 acres	USAR	1959
PA012	Brownsville USARC 1300 6th Street Hiller, PA 15444-9999	Fayette	Appalachian Plateau	2	16,941	14 acres	USAR	1963
PA013	Butler USARC/S-S 360 Evans City Road Butler, PA 16001-2799	Butler	Appalachian Plateau	3	29,264	6.84 acres	USAR, lease	1960
PA014	Frank M. Parker USARC 721 South 6th Street Chambersburg, PA 17201-3696	Franklin	Ridge and Valley	2	19,238	3 acres	USAR	1958
PA015	James W. Reese USARC 500 W. 24th Street (Upland) Chester, PA 19013-4999	Delaware	Coastal Plain	3	28,129	5 acres	USAR	1958

Table 3.2-1: Locational Information for 99th RSC Facilities within Pennsylvania								
Facility ID	**Facility Name and Location**	**County**	**Region**	**No. of Bldgs**	**Square feet**	**Area**	**Ownership**	**Date****
PA017	PFC Melvin L. Brown USARC/S-S RR 2 Box 314 Clearfield, PA 16830-9109	Clearfield	Appalachian Plateau	2	18,678	4.5 acres	USAR	1959
PA018	LTA Clinton Cork Brocktown Road Clinton, PA 15026-9802	Beaver	Appalachian Plateau	3	4,686	191.2 acres	USAR, lease	1957
PA020	Blommen-Russell USARC 4th Avenue and Hillcrest Street Dubois, PA 15801-2399	Clearfield	Appalachian Plateau	3	14,395	5 acres	USAR	1959
PA021	AMSA #31 (G) 2101 S. Delchester Road Newton Square, PA 19073-5098	Delaware	Piedmont	1	5,145		USAR	1976
PA022	Edgemont USARC 2101 S. Delchester Road Edgemont, PA 19028-5099	Delaware	Piedmont	4	46,450	48.84 acres	USAR	1976
PA025	Erie AFRC/S-S 3938 Old French Road Erie, PA 16504-2098	Erie	Central Lowlands	2	N/A		Permit	
PA026	Erie USARC #2 1107 Payne Avenue Erie, PA 16503-1791	Erie	Central Lowlands	1	21,888		Lease	
PA027	Pendel-Caminiti USARC 950 New Castle Road Farrell, PA 16121-1266	Mercer	Appalachian Plateau	2	32,692	5 acres	USAR	1959
PA029	SGT Marlin L. Gahres USARC 191 Fisher Avenue, Building 19-1 Ft. Indiantown Gap, PA 17003-5045	Lebanon	Ridge and Valley	2	25,980	13 acres	USAR, Lease	1974
PA030	USAR Garrison USARC Building 19-76 Ft. Indiantown Gap, PA 17003-5016	Lebanon	Ridge and Valley	1	N/A		Installation	
PA031	ECS/AMSA #24 (G) Building 10-83/16-149 Ft. Indiantown Gap, PA 17003-5015	Lebanon	Ridge and Valley	2	N/A		Installation	
PA032	USARC #2 Building 4-19 Ft. Indiantown Gap, PA 17003-5011	Lebanon	Ridge and Valley	1	N/A		Installation	Ca. 1937
PA034	FIG USARC #2 Building 3-50 Ft. Indiantown Gap, PA 17003-1944	Lebanon	Ridge and Valley	1	N/A		Installation	Ca. 1937

Table 3.2-1: Locational Information for 99th RSC Facilities within Pennsylvania

Facility ID	Facility Name and Location	County	Region	No. of Bldgs	Square feet	Area	Ownership	Date**
PA035	Franklin USARC 1545 Airport Road Franklin, PA 16323-1999	Venango	Appalachian Plateau	4	13,689	5 acres	USAR	1959
PA038	LTA-Keystone RD 3, 6467 Mike Wood Boulevard Conneaut Lake, PA 16316	Crawford	Appalachian Plateau	5	3,379	510 acres	USAR	1989
PA039	Adams County Memorial USARC 1200 Fairfield Road Gettysburg, PA 17325-7237	Adams	Piedmont	3	14,441	4 acres	USAR	1962
PA041	Greencastle USARC/AMSA 113 389 Pensinger Road Greencastle, PA 17225-9567	Franklin	Ridge and Valley	6	39,455	27 acres	USAR	1953
PA042	Greensburg USARC 900 Armory Drive Greensburg, PA 15601-5297	Westmoreland	Appalachian Plateau	4	19,972	5 acres	USAR	1957
PA043	AMSA #104 (G) 2150 Hunter Road Greensburg, PA 15601-4998	Westmoreland	Appalachian Plateau	1	15,800		Lease	
PA044	Harrisburg AFRC 2997 North 2nd Street Harrisburg, PA 17110-1297	Dauphin	Ridge and Valley	4	72,634	7 acres	USAR	1955
PA046	Horsham Memorial USARC 936 Easton Road Horsham, PA 19044-3399	Montgomery	Piedmont	2	28,751	7 acres	USAR	1960
PA048	Land for future USARC/OMS #2 South Park Manor Huntingdon, PA 16652-3200	Huntingdon	Ridge and Valley	0	N/A	7.55 acres	USAR	N/A
PA050	Indiana County Memorial USARC 443 Route 119 North Indiana, PA 15701-1296	Indiana	Appalachian Plateau	2	15,906	3 acres	USAR	1960
PA051	Johnstown ASF 292 Aviation Road Johnstown, PA 15902-7201; Johnstown Air Traffic Control Tower Aviation Road, Johnstown, PA 15904; USMC Reserve Training Center Aviation Road, Johnstown, PA 15902	Cambria	Appalachian Plateau	4	162,380	69.27 acres	USAR, Lease	1997
PA052	Johnstown USARC #2 1300 Saint Clair Road Johnstown, PA 15905-1498	Cambria	Appalachian Plateau	2	19,665	5 acres	USAR	1981

Table 3.2-1: Locational Information for 99th RSC Facilities within Pennsylvania

Facility ID	Facility Name and Location	County	Region	No. of Bldgs	Square feet	Area	Ownership	Date**
PA053	Johnstown USARC #1/S-S 295 Goucher Street Johnstown, PA 15905-3492	Cambria	Appalachian Plateau	2	13,561	3.37 acres	USAR	1993
PA055	Kittanning USARC RD 8 Box 282A Kittanning, PA 16201-0982	Armstrong	Appalachian Plateau	2	14,228	5.97 acres	USAR	1984
PA056	Lancaster USARC 1135 Ranck Mill Road Lancaster, PA 17602-2594	Lancaster	Piedmont	2	30,697	4 acres	USAR	1957
PA057	Greensburg USARC Storage Building D-13 Center Drive Latrobe, PA 15650	Westmoreland	Appalachian Plateau	1	14,125		Lease	1993
PA058	Lewisburg USARC Hafer and JPM Roads Lewisburg, PA 17837-9714	Union	Ridge and Valley	2	11,921	5 acres	USAR	1988
PA059	Mifflin County USARC RD #1, Box 157 Lewistown, PA 17044-9710	Mifflin	Ridge and Valley	2	17,865	5.77 acres	USAR	1987
PA060	Lock Haven USARC RD 60 Lock Haven, PA 17745-9742	Clinton	Ridge and Valley	2	24,339	11 acres	USAR	1985
PA062	Crawford County Memorial USARC 1151 Morgan Street Extension Meadville, PA 16335-2729	Crawford	Appalachian Plateau	3	14,643	5 acres	USAR	1961
PA063	Lawrence County Veterans Memorial USARC 410 Miller Avenue New Castle, PA 16101-1451	Lawrence	Appalachian Plateau	2	15,652	3.41 acres	USAR	1962
PA065	AMSA #110 (G) 2313 West State Street New Castle, PA 16101-1197	Lawrence	Appalachian Plateau	1	12,800		Lease	1987
PA067	New Kensington Memorial USARC/S-S 2450 Leechburg Road New Kensington, PA 15068-4697	Westmoreland	Appalachian Plateau	2	19,698	4 acres	USAR	1959
PA068	1LT Ray S. Musselman Memorial USARC 1020 Sandy Hill Road Norristown, PA 19401-4151	Montgomery	Piedmont	2	39,346	3.45 acres	USAR	1956
PA070	SGT Charles E. Kelly USARC #2 Buildings S-20, 21, Kelly Support Fac. Oakdale, PA 15071-5001	Allegheny	Appalachian Plateau	2	N/A		Installation	1961

Table 3.2-1: Locational Information for 99th RSC Facilities within Pennsylvania

Facility ID	Facility Name and Location	County	Region	No. of Bldgs	Square feet	Area	Ownership	Date**
PA071	SGT Charles E. Kelly USARC #1 Building S-5, Kelly Support Fac. Oakdale, PA 15071-5001	Allegheny	Appalachian Plateau	1	3,000		Installation	1961
PA072	AMSA #105 (G) Building S-16, Kelly Support Fac. Oakdale, PA 15071-5009	Allegheny	Appalachian Plateau	1	N/A		Installation	1960
PA073	William E. Copley USARC 206 Park Ave., Hassen Heights Oil City, PA 16301-2092	Venango	Appalachian Plateau	3	14,516	5 acres	USAR	1960
PA074	Philadelphia Memorial AFRC 2828-98 Woodhaven Road Philadelphia, PA 19154-1634	Philadelphia	Atlantic Coastal Plain	2	88,780	9 acres	USAR	1965
PA076	Germantown USARC 5200 Wissahickon Avenue Philadelphia, PA 19144-4095	Philadelphia	Piedmont	3	38,783	5 acres	USAR	1955
PA077	LTG Malcolm Hay USARC (CLOSED) 950 Saw Mill Run Boulevard Pittsburgh, PA 15226-1194	Allegheny	Appalachian Plateau	1	31,124	3.14 acres	USAR, lease	1952
PA078	COL Harold E. Steele USARC 6482 Aurelia Street Pittsburgh, PA 15206-4036	Allegheny	Appalachian Plateau	2	36,776	1.4 acres	USAR	1952
PA079	PVT S.L. Morelock USARC/S-S 7100 Leech Farm Road Pittsburgh, PA 15206-1293	Allegheny	Appalachian Plateau	2	42,602	5.73 acres	USAR	1964
PA080	MAJ Charles D. Stoops USARC 215 Center Street Punxsutawney, PA 15767-1295	Jefferson	Appalachian Plateau	2	18,271	6 acres	USAR	1958
PA081	AMSA #106 (G) South Gilpin Street Extension Punxsutawney, PA 15767-1999	Jefferson	Appalachian Plateau	1	12,420		Lease	1987
PA085	Reading USARC (old) 1800 North 12th Street Reading, PA 19607	Berks	Ridge and Valley	1	47,050	2 acres	USAR	1923
PA086	Reading USARC 547 Philadelphia Avenue Reading, PA 19607-2798	Berks	Ridge and Valley	1	23,308	8.61 acres	USAR	1987
PA087	Elks County Memorial USARC 500 North Saint Marys Road Saint Marys, PA 15857-0558	Elk	Appalachian Plateau	4	15,257	7 acres	USAR	1961

Table 3.2-1: Locational Information for 99th RSC Facilities within Pennsylvania								
Facility ID	**Facility Name and Location**	**County**	**Region**	**No. of Bldgs**	**Square feet**	**Area**	**Ownership**	**Date****
PA088	Robert E. Roeder USARC 101 Route 61 South Schuylkill Haven, PA 17972-1099	Schuylkill	Ridge and Valley	2	27,404	4.81 acres	USAR	1960
PA089	SGM Samuel P. Serrenti Memorial USARC Pine Street and Colfax Avenue Scranton, PA 18510-1994	Lackawanna	Ridge and Valley	3	26,947	2.65 acres	USAR, Lease	1951
PA090	Centre County Veterans Memorial USARC 1250 Fox Hollow Road State College, PA 16803-6796	Centre	Ridge and Valley	2	16,108	3.97 acres	USAR, Lease	1963
PA094	Monroe County Memorial USARC Building 103 - Tobyhanna Army Depot Tobyhanna, PA 18466-5084	Monroe	Appalachian Plateau	2	N/A	4.01 acres	USAR	1995
PA095	Uniontown USARC/S-S 254 McClellantown Road Uniontown, PA 15401-3182	Fayette	Appalachian Plateau	5	19,821	7.18 acres	USAR	1961
PA096	Washington USARC 10 Scenic Drive Washington, PA 15301-9211	Washington	Appalachian Plateau	3	27,560	5 acres	USAR	1956
PA097	SGT George Lenkalis USARC Washington Avenue and Warren Street West Hazleton, PA 18201-1124	Luzerne	Ridge and Valley	2	14,153	3.1 acres	USAR	1958
PA099	Wilkes-Barre USARC 1001 Highway 315 South Wilkes-Barre, PA 18701-6926	Luzerne	Ridge and Valley	3	25,303	4 acres	USAR	1955
PA107	New Cumberland USARC/OMS 18th Street and J Avenue New Cumberland, PA 17070-5009	York	Piedmont	2	35,494		Lease	1994
PA118	AMSA 103, ECS 103 6467 Mike Wood Boulevard Conneaut Lake, PA 16316-6661	Crawford	Appalachian Plateau	2	56,181		USAR	1999
PA126	Parking for Malcolm Hay USARC (PA077) - McKinley Park Extension Pittsburgh, PA 15226-1148	Allegheny	Appalachian Plateau	0	N/A		USAR	N/A
PA135	York Memorial USARC 605 Arsenal Road York, PA 17402-2135	York	Piedmont	2	14,224	7 acres	USAR	1958
PA137	MG J. Wurts Memorial USARC Building 176, NAS Willow Grove, PA 19090-5110	Montgomery	Piedmont	1	52,143	3 acres	USAR, Permit	1977

Table 3.2-1: Locational Information for 99th RSC Facilities within Pennsylvania

Facility ID	Facility Name and Location	County	Region	No. of Bldgs	Square feet	Area	Ownership	Date**
PA138	AMSA #23 (G) Building 178, NAS Willow Grove, PA 19090-5011	Montgomery	Piedmont	1	N/A		USAR	1977
PA139	North Penn USARC 1625 Berks Road Norristown, PA 19403-4815	Montgomery	Piedmont	6	53,436	19 acres	USAR	1974
PA143	ASF #28 Building 177, NAS Willow Grove, PA 19090-5011	Montgomery	Piedmont	1	N/A		Permit	
PA147	AMSA #116 (G) 547 Philadelphia Avenue Reading, PA 19607-2798	Berks	Ridge and Valley	1	9,225	2 acres	USAR	1987
PA148	Lycoming Memorial USARC 1605 Four Mile Drive Williamsport, PA 17701-1989	Lycoming	Ridge and Valley	2	27,742	6.59 acres	USAR	1960
PA152	AMSA #32 (G) 100 Stephens Road Wilkes-Barre, PA 18702-6726	Luzerne	Ridge and Valley	1	14,600	1.4 acres	Lease	1966
PA159	AMSA #112 (G) RD 1, Box 453-A Lock Haven, PA 17745-9742	Clinton	Ridge and Valley	1	N/A		USAR	1981
PA166	99th RSC HQ (NEW) Moon Township, PA 15108	Allegheny	Appalachian Plateau	0	N/A	25 acres	Lease	Under construct.
PA171	Consolidated AMSA Aviation Road Johnstown, PA 15902-7201	Cambria	Appalachian Plateau	0	N/A	9.73 acres	USAR, Lease	Under construct.
PA173	F1G Wash/Screen Plant TNG Area Ft. Indiantown Gap, PA	Lebanon	Ridge and Valley	0	N/A	17 acres	Installation	Under construct.

* Square footage for buildings generally available only for facilities owned by USAR.

** Date of Construction is date when first building on facility was constructed, not always available for leased/permitted facilities or facilities on installations.

Geology

Human occupation of a particular area is influenced by a number of environmental parameters, including geology. The composition and structural attributes of the underlying bedrock of a region affects the location and morphology of drainage patterns; the depth, composition, and productivity of soil formations; the general topography (mountains, valleys, sinkholes, caves, etc.); and the occurrence of lithic resources (outcrops, river-transported cobbles, etc.). The following text was written by Bill Sevon of the Pennsylvania Geological Survey, Department of Conservation and Natural Resources in Harrisburg, Pennsylvania. It is undated. A generalized map showing the geology of Pennsylvania is provided in Figure 3.2-2.

The geology of Pennsylvania is diverse and is shown today by a variety of rocks and landforms. The Geologic Map of Pennsylvania has 195 rock units and the Landform Map of Pennsylvania has 653 subdivisions. The history of some of the rocks goes back billions of years, but the focus here starts about 550 million years ago. At that time the western part of Pennsylvania was a low landmass, part of the Laurentian continental crustal block, and the eastern part was a shallow sea in which sand and carbonates were deposited. About 425 million years ago, in the Ordovician Period, mountain-building activity east of Pennsylvania caused a large sea to develop across all of Pennsylvania. This sea, the Appalachian Basin, existed for over 200 million years and was the site of deposition of thousands of feet of sediments eroded from the eastern mountains. These sediments were deposited in a variety of different environments, from marine to fluvial, and were eventually consolidated into the rocks that exist today.

About 260 million years ago, in the Permian Period, the continents of Africa and North America collided. The collision created a large mountain range in eastern Pennsylvania, folded rocks in the central part of the state into anticlines and synclines, and created mainly systematic fractures in the western and northeastern parts of the state. Erosion of the mountains started during their development, and eroded materials were deposited in central and western Pennsylvania by westward-flowing streams. About 210 million years ago, in the Late Triassic, the continents separated and a narrow basin formed in southeastern Pennsylvania in which red sediments were deposited and diabase was intruded. Since the end of deposition in that basin, continued erosion has produced the landscape and drainage system that exists today. Parts of Pennsylvania were glaciated during the Pleistocene, in last 2 million years, and areas beyond the limits of glacial ice were affected by a periglacial climate.

The detailed geology of Pennsylvania is related to provinces that contain similar bedrock and landscape. These provinces occur as bands extending more or less northeast-southwest across the state and are, from southeast to northwest, the Atlantic Coastal Plain, Piedmont, New England, Ridge and Valley, Appalachian Plateaus, and Central Lowlands.

The southeastern province, the Atlantic Coastal Plain, is a narrow, linear, relatively flat, low-elevation area paralleling the Delaware River between Trenton, New Jersey and Maryland. It underlies Philadelphia and environs, and consists of sand and gravel overlying complexly folded metamorphic rocks. Its southeastern boundary is the Delaware River. Its northwestern boundary is a low, poorly defined escarpment and the northwestern margin of the sand and gravel.

The Piedmont extends in a wide band across southeastern Pennsylvania and includes all or parts of Adams, York, Lancaster, Chester, Montgomery, and Bucks Counties. The Piedmont is divided into three distinctive parts. A southeastern upland consists of rolling to flat-topped hills that are underlain by complexly folded and faulted schist, gneiss, and quartzite. A central, very low relief, karstic lowland is underlain by limestone and dolomite. A northern, slightly higher lowland consists of rolling hills that are underlain by red sandstone and siltstone of Triassic age and higher hills composed of diabase.

The New England Province occurs in Berks, Lehigh, and Northampton Counties. The province consists of circular to linear, rounded hills composed of granitic gneiss, granodiorite, and quartzite. The hills are up to several hundred feet high and rise abruptly from surrounding lowlands.

The Ridge and Valley covers all or parts of 28 counties from Northampton to Lycoming to Bedford to Adams. Its southern boundary is the hills of the New England Province and the red rocks of the Piedmont. The northwest boundary from Williamsport to Maryland is a distinct escarpment. East of Williamsport the boundary is arbitrary. Sedimentary rocks in the Ridge and Valley include limestone, dolomite, siltstone, sandstone, conglomerate, and anthracite. These rocks range in age from Cambrian to Pennsylvanian. The southeast part of the province, called the Great Valley, is a wide lowland underlain by limestone and dolomite on the south side and shale on the north side. Rocks in the remainder of the province are folded into numerous anticlines and synclines. Rocks in these folds generally have steep dips and erosion has created long, linear ridges composed of erosion resistant sandstone. These ridges are separated by broad to narrow valleys that are underlain by erosion-susceptible siltstone, shale, limestone, and dolomite. An upland centering on Schuylkill County contains abundant anthracite as does the valley occupied by Scranton and Wilkes-Barre. The section of linear ridges and valleys is separated from the Anthracite area by a lowland surrounding the Susquehanna River.

The Appalachian Plateaus Province comprises the largest geologic province of Pennsylvania and covers all or parts of 39 counties from Pike to Centre to Bedford to Erie. The province is underlain by a variety of basically flat-lying rocks that consist of shale, siltstone, sandstone, conglomerate, and bituminous coal. These rocks range in age from Late Devonian to Permian. The landscape is varied, but for the most part consists of rounded hills, flat uplands, and narrow moderately deep valleys. The northwestern and northeastern parts have been glaciated at least three different times within the last 800,000 years and unconsolidated glacial deposits occur in those areas. Distinctly different landscape occurs in Washington and Greene Counties where narrow-crested, steep-sloped hills and short narrow steep-gradient valleys show evidence of much landslide activity. An area in north-central Pennsylvania centered on Clinton, Cameron, Potter, and McKean Counties has many relatively narrow steep-sloped flat-floored valleys that are hundreds of feet deep and are separated by broad to narrow uplands. In addition to the widespread bituminous coal deposits in the western and north-central parts of this province, oil and gas has been produced in the western part for nearly 150 years.

The Central Lowlands Province consists of a narrow band of land adjacent to Lake Erie. The bedrock is shale of Late Devonian age. The shale is overlain locally by unconsolidated glacial and lake deposits. The whole area slopes gently toward Lake Erie. Serron n.d.

Geomorphology

Just as the underlying bedrock in a region influences human settlement patterns and land use, so does the nature and distribution of landforms (e.g., hills, valleys, terraces, dunes, islands, barrier reefs). Slight changes in regional topography can produce significant variations in the concentrations of floral and faunal resources, while differences in elevation can encourage specific land use patterns (high ground is used for defense and/or tracking of resources; low areas provide good agricultural lands). In addition, the study of landforms and their distribution can provide information on the relative age and stability of living surfaces within a region and thus, can provide information on the preservation of cultural deposits within an area. For all of these reasons, geomorphology is an important aspect of any cultural resource investigation. Accordingly, a brief discussion of Pennsylvania's physical geography and geomorphology is provided below. The following text is adapted from Paul A. Raber's 1985 publication, *A Comprehensive State Plan for the Conservation of Archaeological Resources, Volume II*, published by the PHMC.

The United States as a whole may be divided into major physical or topographic regions; Pennsylvania falls primarily within the Eastern Highlands region with its southeastern portion within the Coastal Plain region. The physiographic provinces into which, following F.N. Fenneman (1938), geographers divide Pennsylvania are 1) the Coastal Plain province (Embayed Section); 2) the Piedmont Province (both Upland and Lowland Sections); 3) the Ridge and Valley Province (Middle Section) with which the Reading Prong of the New England-Arcadian Province may be included, 4) the Appalachian Plateau Province (including both the Glaciated and Unglaciated Allegheny Plateau) and 5) the Central Lowland Province (Great Lake section) (Powers 1966). Figure 3.2-3 illustrates the physiographic provinces of Pennsylvania.

The Coastal Plain occupies only a narrow strip in extreme southeastern Pennsylvania in the vicinity of Philadelphia. Topography in this region is characterized by a nearly level terrace surface incised by shallow valleys that lays within the Delaware River floodplain. A matrix of folded and faulted schists, gneiss, and other metamorphic rocks is overlain by poorly consolidated sand and gravel. Elevation ranges from sea level to 200 feet. To the northwest the Fall Line divides the Coastal Plain from the Piedmont (Sevon 2000; Van Diver 1990).

Gently sloping toward the coast, the Piedmont region contains some of the most agriculturally productive land in Pennsylvania and now, as in previous periods, is a favored area for settlement. Elevation ranges from 20 to 1355 feet. The region is bounded on the east by the Fall Line, which parallels the course of the Delaware River in southern Pennsylvania, demarcating the geological and topographic break between coastal plain and piedmont. To the west, it is bounded by the Ridge and Valley province. The terrain exhibits moderately dissected valleys separated by broad low, often flat to round-topped hills. The underlying bedrock comprised of schist gneiss, and quartzite in areas, dominated by shale, sandstone and siltstone in others, is complexly folded and faulted (Sevon 2000)

The erosional history of the Ridge and Valley Province, including the northern tip of the Blue Ridge province (South Mountain) and the Reading Prong and Great Valley, is the subject of a debate that focuses on the irregular drainage patterns and the flat ridge elevations, which characterize the area. The spine of the Appalachian Mountains, the province reaches its greatest width in central Pennsylvania, lying to the northwest of the Piedmont and southeast of the Appalachian Plateau, where it emerges as series of long, linear summits that twist back on themselves, separated by wide, nearly level valleys. The heights of the mountains average between 800 and 1000 feet. The ridges rest on a base of resistant sandstone, conglomerate, and quartzite interspersed with less resistant shales, siltstones, limestone and dolostone. Included in the province is the topographically distinct Great Valley, exhibiting more extensive faulting and folding than the rest of the region (Van Diver 1990).

The Appalachian Plateau Province consisting, in Pennsylvania, of both the glaciated and unglaciated regions of the Allegheny Plateau and the Allegheny Mountains, flanks the Appalachian Mountains on the west. Its southeastern boundary is marked by the sharp rise of the Allegheny Front, overlooking the last valley of the Ridge and Valley region. In contrast to that province, valley bottoms are narrow with steep walls and smooth floors. Local relief may vary from 500 to 1,000 feet. In addition to the major rivers – the Susquehanna, Delaware, Allegheny, and Monongahela and their tributaries, which rise in the Plateau and drain it – there is a dendritic pattern of streams which have deeply dissected the surface of the moderately sloping plateau, further modified by glacial activity. The glaciated portions to the northwest are higher in elevation (ca. 2000 feet) with extensive level areas and many swampy areas or small lakes (Van Diver 1990).

The Central Lowland Province, represented by the Lake Erie Plain in Pennsylvania, occupies a narrow strip (ca. 2 to 5 miles wide) along the lakeshore. Lying to the northwest of the plateau, the area's topography has been substantially formed by glacial scouring during the Pleistocene advances and by post-Pleistocene changes in the shoreline of Lake Erie resulting in low, fairly flat terrain, underlain by horizontal beds of shale and siltstone. The elevation ranges from a low of about 570 feet to a high of 800 feet at the base of the Erie scarp (Sevon 2000;Van Diver 1990).

Soils

Soils are an important variable in understanding human settlement patterns and land use for several reasons. Clearly, the properties of a given soil type exert a strong influence over what plants will grow in an area, the abundance and diversity of plants that can be supported, and the overall health of the plant community. These factors in turn influence the diversity and health of the faunal community as well the region's potential for supporting human settlement. An understanding of the properties and distribution of the various soils within a region, thus, provides insight into the range of activities that could be undertaken there and can be used to develop models predicting past land use patterns. In addition, a knowledge of soils provides information on the probability of encountering cultural deposits across the landscape and their potential state of preservation (i.e., strongly acid soils are associated with poor preservation of organic materials; deposition of materials in highly erodable soils will result in transportation of materials away from their primary context; identification of a source for ceramic clays will increase the probability of encountering associated sites). The following text is excerpted from An Introduction to Soils of Pennsylvania (Blumberg and Cunningham 1982). A more detailed soils map, published by the Natural Resource Conservation Service (NRCS) is provided in Figure 3.2-4.

Bedrock and Topography - Pennsylvania soils are the product of the general forces of weathering, vegetation, climate, and time working on the particular parent material and topography of the region. Many different types of bedrock underlie Pennsylvania. Bedrock and its weathering characteristics are not only responsible for the nature of the developing soil, but also influence the topography of the landscape. Bedrock and topography generally correspond across the state.

At the southeastern and northwestern edges of Pennsylvania, soils are not derived from massive rock, but from sands deposited when this land was once seashore. Coastal deposits like these are found on flat open lowlands. The sands weather and accumulate organic matter to become soil. The Williamson soils of Erie County were formed from coastal deposits.

In the southeastern part of the state, a band of very old metamorphic rock lies under the soil. This bedrock – schist, gneiss, and quartzite – is the oldest outcrop in the state. Formed in the pre-Cambrian era more than 600 million years ago, it is the remnant of mountains once higher than the Rockies. These great mountains weathered away very slowly to form the rolling topography found in Montgomery County today. Where siltstone occurs in southeastern Pennsylvania, it contains veins of very hard igneous rock. These intrusions weather more slowly than the siltstone, leaving rocky deposits, which interfere with agriculture.

Underlying the rest of the state is sedimentary rock – shale, sandstone, and limestone – formed from material deposited in lakes and seas once present in Pennsylvania. Low mountain ridges and valleys run northeast and southwest across central Pennsylvania. This topography is the result of a series of geologic events, which occurred after the shale, sandstone, and limestone sediments formed. Horizontal layers of rock were upturned, wrinkled, and folded. Subsequent erosion of this convoluted surface exposed the upturned layers, creating the landscape we see today.

Pennsylvania's ridges and valleys are evidence of the differential rates of weathering of the layers. Sandstone, the hardest and most chemically resistant sedimentary rock, forms the ridge caps. Limestone, the least resistant, forms the valleys. Shale, of intermediate resistance, underlies the slopes.

Parent Material - When bedrock becomes the parent material for the soils developing in it, it is the source of important soil properties. For example, sandstone soils, which tend to be coarse, dry out so fast that they do not support many crops. Limestone soils in the valleys are generally fertile and productive – the best agricultural soils in Pennsylvania, such as the Hagerstown and Duffield soils in Lancaster County, are limestone soils. Shale soils are fine-textured and tend to be acidic and low in nutrients – with large additions of fertilizer, they are farmed. On mountainsides, they often support mixed forests. Much of the land overlying shale deposits has been ruined by strip mining, because shale contains Pennsylvania's rich coal beds.

Parent material can be classified according to its history, as transported or residual. Residual soils have formed in their present location. On gently rolling uplands, residual soil is likely to be well developed and productive, as is the Chester soil of Chester County, which produces corn and tobacco. However, while residual soils formed on steep slopes are deep, they are not suitable for cultivation with modern equipment. In Pennsylvania, vast forests represent the best use of steep mountainsides because they provide a cover that minimizes erosion.

The forces of ice, water, wind, and gravity carry small particles as well as rocks across the landscape. Soil forms in this transported material deposited over the original soil or bedrock. Transported parent material can be glacial, aeolian, colluvial, or alluvial in origin.

The once glaciated northern corners of Pennsylvania have glacial features superimposed on older topography. Glacial till deposits consist of rock material of all kinds and sizes, from boulders to clay, brought in by the ice and left where it stands today. Outwash features, made of material carried and sorted by water flowing from the melting glacier, are found on relatively open topography. Because they have very compacted firm subsoil,

glacial till soils generally have drainage problems. They are not well suited to row-crop agriculture, but make good pasture and hayland. The Volusia soils of Tioga County are glacial till soils.

Parent material deposited by the wind is called aeolian, or loess, material. Chalfont soil, found in Bucks County and largely used for row crops, is an example. Loess soils are not widespread in Pennsylvania, but in the Midwest, the great grasslands developed in loess soils. The loess, which provides the optimum soil texture, combined with the effects of growing grasses over time, created some of the richest agricultural soil on earth.

While transported parent materials such as aeolian or glacial deposits cover large regions, others are only transported locally. Footslopes of the mountains in Pennsylvania are often created by rock, which has tumbled down from above. Such loose rock material is called colluvium. The forested Buchanan soil of Centre County is formed from sandstone colluvium. Because colluvial soils have a problematic feature called fragipans, they are often used for pastures rather than for development. Fragipans, also found in glacial till soils, are subsoil layers of exceptionally dense material, which may be a few inches to several feet thick. They are relatively impermeable to water and impenetrable to plant roots; hence the soil above them is often waterlogged.

In river and stream valleys, alluvium – sediment carried by flowing water – is deposited during floods. New parent materials are continually added to existing deposits. This new material keeps these soils fertile as well as pedologically young. Alluvial soils, while good for farming, are generally hazardous for building because they are subject to flooding. The Linden soils along the Susquehanna, periodically the site of devastating floods, are an example.

Soil Associations - Soils have been classified into orders, suborders, great groups, subgroups, and families. Pedological age, temperature and water regimes, and special features such as fragipans, are some of the characteristics on which the system is based. A local soil has a combination of traits unique to it, such as parent material, texture, drainage characteristics, horizon sequence, and landscape position. A given soil is likely to be found over a limited geographic region wherever the same bedrock and landscape position are found. It is ordinarily associated with other local soils on associated bedrock and landscape positions.

An individual soil has its own name and is called a soil series. Groups of soil series commonly found together are called a soil association. In Pennsylvania, soil associations are grouped by bedrock and parent material. The following are the soil associations for the state (Blumberg and Cunningham 1982)

Soils Formed from Unconsolidated Sediments
Conotton-Birdsall and Howell-Pope.

Soils Formed from Glacial Till
Sheffield-Platea, Erie-Langford, Venango-Cambridge, Ravenna-Canfield, Hanover-Alvira, Volusia-Morris, and Lordstown-Oquaga.

Soils Formed Primarily from Shale
Gilpin-Wharton, Cavode-Cookport, Leck Kill-Meckesville, Berks-Leck Kill, Berks-Weikert, Penn-Lewisberry, and Abbottstown-Readington.

Soils Formed Primarily from Sandstone and Quartzite
Hazleton-Cookport, Hazleton-Laidig, Morrison-Vanderlip, and Edgemont-Highfield.

Soils Formed Primarily from Limestone and Shale
Hagerstown-Edom, Hagerstown-Duffield, Duffield-Conestoga, and Guernsey-Culleoka.

Soils Formed from Igneous and Metamorphic Rocks
Chester-Glenelg and Neshaminy-Lehigh.

Hydrology

Hydrology, or the study of surface and near surface water systems, is important to the study of settlement patterns and land use for two primary reasons: (1) people need water to live and so will settle in the vicinity of water sources, and (2) the abundance and types of water sources in an area will strongly influence the intensity of settlement and the diversity of land uses within a region. Rivers and lakes serve as power sources for industry, as transportation routes for people and goods, and as sources of fish, waterfowl, and shellfish. Springs provide sources of potable water in otherwise arid landscapes. Aquifers permit development of wells, while high groundwater tables may result in frequent flooding of an area. Accordingly, a knowledge of the abundance and type of water in Pennsylvania is considered to be an important element in reconstructing past land use. A summary of Pennsylvania's hydrology is provided below. Pennsylvania watersheds and landcover are shown in Figure 3.2-5.

Figure 3.2-5 divides the state into 13 major watersheds: the Upper Delaware, Lower Delaware, Upper Susquehanna, West Branch Susquehanna, Lower Susquehanna, Upper Chesapeake, Potomac, Southern Lake Erie, Eastern Lake Erie, Southwestern Lake Ontario, Allegheny, Monongahela, and the Upper Ohio/Beaver. The three most important river systems are the Ohio, Susquehanna, and Delaware, which drain the overwhelming majority of the state. Western Pennsylvania is drained by the Monongahela and Allegheny rivers which meet at Pittsburgh to form the Ohio. The central part of the state is drained by the Susquehanna, and eastern Pennsylvania is drained by the Delaware. Erie County, in the northwestern corner of the state, is drained by small streams that flow into Lake Erie. A small portion of Potter County in north central Pennsylvania is drained by the Genesee River, which flows into Lake Ontario. In south-central Pennsylvania, areas of Bedford, Franklin, Fulton and Adams counties drain into tributaries of the Potomac River (USGS 2002, ESRI 1998).

The Delaware River marks the eastern border of Pennsylvania. The lower portion of the river is a tidal estuary. The Susquehanna River contains two main branches. The North Branch begins in New York, entering Pennsylvania's northeast corner and flowing south. The West Branch originates in the Allegheny Mountains and flows east, to meet the North Branch at Sunbury in Northumberland County, after which the river flows south to the Chesapeake Bay. The Susquehanna's principal tributary is the Juniata River, which joins the main river upstream from Harrisburg. The Allegheny River begins in the northwest part of the state, and flows south, while the Monongahela River begins in West Virginia and flows north. The two rivers join at Pittsburgh to form the Ohio River, which flows west to meet the Mississippi River. Both the Ohio River and Delaware River are major commercial arteries that have played a significant role in the state's history. Significant lakes are found primarily in the northern parts of Pennsylvania that once contained glaciers. The state's largest natural lake is Conneaut Lake, which covers over 900 acres in Crawford County (ESRI 1998).

Ecosystem

Climate, vegetation, and faunal diversity represent the final variables influencing human settlement and land use in a region. Climate data are used to indicate any restrictions on settlement and land use (e.g., drought conditions, frequent catastrophic storm events) as well as to aid in interpretation of other sources of data such as tree ring growth rates, rates of sedimentation in lakes and land surfaces, and apparent erosional gaps in a depositional sequence. Vegetation and faunal diversity data, in contrast, provide information on the available resource base in the region. Information on both past and present conditions is required, in order to provide as detailed a reconstruction of the ecosystem of the region through time. A discussion of past climate, vegetation, and faunal diversity is provided in Section 3.5 below. The following paragraphs provide a summary of modern conditions in Pennsylvania.

Pennsylvania's climate can be described as temperate continental and is characterized by a distinct summer and winter. Climatic variations result from the range of altitudes in the state. In the Northern Piedmont region annual precipitation averages 900 to 1,150 mm with maximum precipitation occurring in spring and early in summer although the area is prone to droughts in mid-summer. Average annual temperature ranges from 10 to 14 C. Average freeze-free period is from 160 to 200 days. In the Allegheny Plateau average annual precipitation ranges from 750 to 1,025 mm. Precipitation occurs mostly in the form of snow. Annual temperature ranges from 8 to 10 C. region receives less precipitation in the fall. Precipitation averages 550 to 825 mm during the growing season

lasting from 110 to 160 days with shorter seasons at the higher elevations and in the north. The average snowfall ranges from 90 cm in the south to more than 227 cm in the north. Temperature averages from 7 to 11 C. The extreme northwest corner of the state receives an average annual precipitation of 900 to 1,025 mm, with slightly more in spring and summer than winter. Precipitation in winter is mostly snow. The average annual temperature is about 10 C with a growing period of around 160 days (USDA 1981).

In the northern end of the state, the northeastern hardwood forest, composed of birch, beech, maple, elm, red oak, and basswood, with an admixture of hemlock and white pine occurs to the north of the Appalachian oak forest, comprised of both black and white species of the tree. Hardwoods such as oak, elm, maple, hickory, ash, walnut, sycamore, yellow poplar, aspen, and birch, grow in the low-lying hills and valleys of southeastern and southwestern Pennsylvania (USDA 1981).

The black bear occurs quite commonly throughout the Appalachian mountains and surrounding areas. The white-tailed deer is very common to the area. Smaller animals include the rabbit, squirrel, woodchuck, beaver, raccoon, opossum, muskrat, coyote, gray and red fox, skunk, ermine, and weasel. Birds in the state include the robin, oriole, cardinal, song sparrow, mourning dove, mockingbird, and bobolink. At higher elevations in extensions of boreal forest, red-breasted nuthatches, black-throated green warblers, golden-crowned warblers, golden-crowned kinglets, and northern juncos are common. Wild turkeys, partridge, ruffed grouse (the state bird), and geese are common game birds. The region is home to several types of salamanders and other amphibians, reptiles, and fish. The state contains many harmless snakes, and a few poisonous varieties such as copperheads and rattlesnakes. Trout, perch, pike, bass, pickerel, and catfish are abundant in the various lakes and streams (USDA 1981).

3.3 Past Research and Data Quality

Documentary and Archival Data Sources

Documentary and archival data sources consulted during preparation of the PLS include the following:

- Archaeological site and survey files, housed at the PHMC, BHP, Harrisburg, PA.
- Architectural structure and survey files, housed at the housed at the PHMC, BHP, Harrisburg, PA.
- NRHP files, housed at the housed at the PHMC, BHP, Harrisburg, PA.
- Selected 99th RSC cultural resources investigations reports, available at the 99th RSC CRP, Oakdale
- 99th RSC facility maps, reports, and real estate data, available at the 99th RSC Real Estate Office, Oakdale

Regional Level Research

Regional level research can be found in academic or contract investigation reports housed at the PHMC in Harrisburg, as well as regional syntheses, undertaken with grant money from the PHMC in the early 1980s, and in journals such as the *Pennsylvania Archaeologist*, *The Archaeology of Eastern North America*, the *Journal of Middle Atlantic Archaeology*, and the PHMC publication series. Selected regional syntheses include Cowin 1981, 1982; Hay et al. 1980; Hay 1981, 1982; Herbstritt 1982; Cox 1984; Raber 1985, 1995; Custer 1986, 1992; George 1992; Kent 1996; and Carr 1998.

The most heavily investigated regions of Pennsylvania include the state's river valleys and urban centers, as well as road corridors in central and western Pennsylvania investigated for highway construction projects. Prehistoric site frequency is highest in the southwest, the Erie Coastal Plain, and the southeastern portions of the state (Carr and Keller 1998).

Facility Level Research

There has been no systematic archaeological or historic structures inventory undertaken for 99th RSC facilities in Pennsylvania. Rather, facilities have been subjected to cultural resources investigations as new construction, expansion, or disposal has warranted. The following is a discussion of cultural resources investigations conducted on 99th RSC facilities as of FY2001.

In 1994, the United States Army Corps of Engineers (USACE), Baltimore District, submitted locations of seven 99th RSC facilities in Pennsylvania slated for future expansion and construction activities to the PHMC for review. These facilities were ECS/AMSA #24 (G) (PA031) and USARC #2 (PA032) at Fort Indiantown Gap; LTA Keystone (PA038); Lewisburg USARC (PA058); Lock Haven USARC (PA060) and AMSA #112 (G) (PA159); and Reading USARC (PA085). PHMC staff evaluated the locations and recommended that no archaeological investigations were necessary at facilities PA031, PA032, PA058, PA060/PA159, and PA085. However, the PHMC required a Phase I archaeological investigation at the proposed AMSA 103/ ECS 103 facility (now PA118) due to a high probability for the recovery of prehistoric and historic archaeological resources.

The USACE, Baltimore District, conducted an initial Phase I survey of the proposed PA118 facility in June 1995. The survey covered an area of ca. 17 acres, and resulted in the discovery of a prehistoric site (the Watson Site, or site 36Cw413) requiring Phase II evaluation. In October 1995, Archaeological and Historical Consultants, Inc. conducted the Phase II evaluation of the Watson Site, as well as additional Phase I survey of portions of the property containing a wetlands mitigation site and an area slated for additional construction, consisting of 17.7 acres. Since the USACE Phase I results had not been submitted to the PHMC for review prior to Phase II evaluation, Archaeological and Historical Consultants combined the Phase I and Phase II results into a single document. The two Phase I investigations together consisted of 511 shovel tests over the 34.7 acre property, and revealed one prehistoric site (the Watson Site, or site 36Cw413), two isolated prehistoric finds, and a low density of historic and recent artifacts representing field scatter or casual discard. At the Watson Site, Phase II evaluation consisted of the excavation of 17 test units and the examination of selected test unit profiles by the project soil scientist. Artifacts were found only in plow zone contexts, and no cultural features were identified. Based upon these results, the archaeologists concluded that the site was not eligible for inclusion in the NRHP, and recommended no further archaeological work (Diamanti 1996). The PHMC concurred with this finding.

In 1994, the USACE, Baltimore District, performed archaeological and architectural historic research (consisting of documentary research and review, field survey, data analysis and resource evaluation) of the Reading USARC (PA085) and adjacent properties. Based on the high level of disturbance to the property from prior construction, the USACE concluded that the archaeological potential on the facility was low. As described above, the PHMC concurred with this finding. The architectural research on the property revealed that the USARC itself is the former Noe-Equal Hosiery Mill, built in 1923 and used during World War II by the United States Army for parachute production. After the war, the Bowers Battery and Spark Plug factory purchased the building. The Army Reserve acquired the structure in 1951, and utilized it until 1987, when a new facility was constructed in Reading. The building has been vacant since that time. In February 1995, the Keeper of the National Register of Historic Places determined the building eligible for listing in the NRHP due to its historical association with the textile production industry in Reading and for its reuse during World War II as a parachute manufacturing plant (99th RSC 2000). As of FY 2001, the building has not been listed formally on the NRHP. The 99th RSC is in the process of disposing of this facility. As transfer of title to a non-Federal agency constitutes an adverse impact to the property as described in 36 CFR 800.9 (b)(5), the 99th RSC, in consultation with the PHMC, has implemented a deed restriction requiring the future end-user to coordinate with the PHMC prior to undertaking an action that would physically alter the structure (99th RSC 2000).

In 1998, prior to construction of a new parking lot at the Brownsville USARC (PA012), archaeologists at the California University of Pennsylvania conducted a Phase I/II archaeological investigation of a Late Prehistoric Monongahela site, the Hiller Reservoir Site (36Fa7), first documented in the 1930s. The archaeological investigation, which consisted of 60 shovel tests placed over 1.48 acres, revealed a low density of prehistoric artifacts and evidence of substantial disturbance to the property due to previous construction of the Army Reserve facility. Based upon these factors, the archaeologists recommended no further investigations at this facility (Cunning et al. 2000). The PHMC concurred with this recommendation. Artifacts recovered from these investigations are curated at the California University of Pennsylvania.

A number of 99th RSC facilities in Pennsylvania are located on other military installations, and have been included in cultural resources investigations associated with those installations. At Fort Indiantown Gap (which contains facilities PA029, PA030, PA031, PA032, PA034, and PA173), the installation had a Cultural Resources Management Plan (CRMP) completed in 1995 (KFS Historic Preservation Group 1995). The study identified 172 potential historic archaeological resources dating from the late 18th to early 20th centuries, 42 of which had been previously destroyed. The remaining 130 resources were considered potentially eligible until further evaluation

could be conducted. None of these archaeological resources is located on or adjacent to 99th RSC facilities. Additionally, the CRMP inventoried all historic structures on the installation constructed before 1950. One of the 99th RSC buildings (facilities PA032/PA034 in building 3-50) predates 1950. According to the CRMP, it was constructed in ca. 1937 and originally was used as a Mess Hall. The building was not evaluated as part of the CRMP.

The Tobyhanna Army Depot (which contains facility PA094) had a Phase I Cultural Resources Investigation completed in 1995 by the USACE, Baltimore District. Since PA094 was not constructed until 1995, the facility was not included in the study, although archaeological testing across the street to the west of the future facility site revealed no buried cultural resources. The only archaeological resources identified on the installation were associated with the Sherman Farm complex, located across the street to the north of the future facility site (USACE 1995). A Phase II archaeological evaluation was undertaken at the Sherman Farm site, and the site was determined not eligible for inclusion to the NRHP. The PHMC concurred with this recommendation. The boundaries of the Sherman Farm site do not intrude into the PA094 facility property.

The New Cumberland Army Depot (which contains PA107) had an Archaeological Overview and Management Plan performed in 1984 (The Pennsylvania State University and Envirosphere Company 1984). At the time of the investigation, PA107 had not been built, and so was not covered in the study. However, the area that would later support the facility (labeled GDA-19 and identified as the Susquehanna River drainage area) was deemed relatively undisturbed and considered a good location for the recovery of archaeological resources. Two prehistoric archaeological sites (sites 36Yo261 and 36Yo337) have been recorded on the installation along the river's edge, in similar topographic settings to the PA107 location. The 1984 study recommended archaeological survey and testing in this portion of the installation. However, there are no records on file at the PHMC or the 99th RSC to indicate any archaeological testing occurred in advance of the facility's erection in 1994.

Cultural Resources investigations recently began at the SGT Charles E. Kelly Support Facility (which contains PA070, PA071, and PA072). In 2000, Parsons Engineering Science completed an architectural assessment of the installation. The assessment identified a potentially eligible Cold War era military historic district built from 1955-1969, comprising 35 structures on the Main Post, including the 99th RSC facilities (Parsons Engineering Science 2000). As of FY2001, this assessment has not yet been reviewed by the PHMC. Additionally, Parsons Engineering Science is conducting a Phase 1a archaeological assessment of the installation, to be completed in FY2001.

Two 99th RSC facilities are located adjacent to roadways included in archaeological investigations. At facility PA008, 50 feet on either side of Airport Road was subjected to a Phase I archaeological survey in advance of road widening, including part of the facility property. However, only a ground inspection of the facility property was included and archaeologists did not perform any subsurface testing within this part of the road-widening footprint. No further archaeological investigations were recommended (Kratzner, Tabachnick and Basalik 1991).

Additionally, the new headquarters for the 99th RSC (PA166), located north of the Greater Pittsburgh International Airport, are adjacent to several roadways that had been surveyed for cultural resources previously. None of the studies identified any archaeological resources or historic structures on or adjacent to the future facility. A letter from the PHMC indicates no archaeological investigations were necessary prior to construction of the facility, and the "Greater Pittsburgh Airport Boiler House," located adjacent to the property, was not eligible for listing in the NRHP.

Last, the 99th RSC CRP has contracted Bregman & Company, Inc., through the USACE, Norfolk District, to conduct background deed searches for all of its facilities, as an initial step in compiling cultural resources data for the properties in all five states under its command. The information is being presented in stand-alone reports for each individual facility. As of FY2001, the majority of the draft deed research reports for the Pennsylvania facilities have been completed and are under review by the 99th RSC CRP.

Evaluation of Documentary Data Sources and Past Research

Within the past 20 years, investigations completed in support of Federal and State undertakings have greatly outnumbered academic investigations, and have significantly increased survey coverage within the state. With the exception of those surveys conducted on military installations, along highway corridors, or within areas previously

subjected to extensive regional survey, such as major river valleys, the results of compliance surveys within a region are synthesized only rarely. The primary source of such syntheses, apart from the statewide context discussed below, are articles published by the *Pennsylvania Archaeologist*, *The Archaeology of Eastern North America*, and the PHMC, in a series of thematic studies.

In 1985, the PHMC published a two-volume report entitled "*A Comprehensive State Plan for the Conservation of Archaeological Resources,*" the second volume of which continues to serve as the statewide cultural context for archaeology (Raber 1985). Additionally, in July 1991, the PHMC issued a document entitled "*Cultural Resource Management in Pennsylvania: Guidelines for Archaeological Investigations*". The PHMC curation guidelines, found within this document, were revised in 1999. Prehistoric archaeological investigations within Pennsylvania have focused primarily on elucidating settlement patterns, more frequently along rivers than on uplands or other settings. The PHMC issued a document in 1998 entitled "*The Development of Prehistoric Settlement Pattern Research Priorities in Pennsylvania*," in which authors Kurt W. Carr and Jenny Keller set as their goal "to develop an explicit set of archaeological survey priorities for the state wide management of one class of archaeological site: upland, plow disturbed, prehistoric, multi-component sites (sometimes termed lithic scatters)." The purpose of the study was to find a means to reduce the number of state-funded Phase I archaeological surveys, following the passage of Pennsylvania Act 70 in 1995, which shifted the burden and funding of archaeological protection from developers and other State-permit applicants to the PHMC. Their research suggested 19 watersheds within the state where upland prehistoric sites frequencies were highest, and consequently where the PHMC would not recommend further Phase I archaeological surveys in upland settings. This policy began implementation in 1996. As of FY2001, the PHMC does not have a similar priority plan for historical archaeological resources.

For architectural resources, the PHMC represents the primary agency conducting and/or compiling data on architectural resources and NRHP properties within the state, both through their own survey efforts and through their program of grants to local communities. Many of the counties in the state have been subjected to countywide architectural surveys during the past 25 years, although only 18 of the 67 counties have been completed. However, it should be noted that countywide surveys are conducted primarily from public roads and include only those resources that can be viewed in sufficient detail from public property. Architectural surveys on military installations and in urban areas are periodically conducted for compliance with Federal and State legislation; otherwise, much of the data housed within this institution comes from State or NRPH nominations of historic structures, districts, or multiple property thematic documentations. The PHMC has commissioned several state wide thematic surveys, including the "Commonwealth Bridge Survey," the "Department of Installations Survey," the Pennsylvania Bureau of State Parks Survey," the Pennsylvania National Guard Armories Survey," and the "Pennsylvania Save Outdoor Sculpture! Survey." Publications available at the PHMC dealing with statewide architectural and historical contexts include topics such as historical industries (Bomberger and Sisson 1991), coal and coke resources (DiCiccio 1997), and historic highway bridges (PHMC 1986).

3.4 Historic Properties Inventory

The historic properties inventory includes:

1. a physical examination of all 99th RSC lands within the Commonwealth of Pennsylvania with a reasonable potential for historic properties, excluding such localities as impact areas or safety hazard zones.

2. the verification of the presence or absence of archaeological resources in all areas controlled by the 99th RSC within the Commonwealth of Pennsylvania that might be adversely impacted by military activities.

3. an existing database or list of documented historic properties.

During an inventory, historic properties are identified and evaluated sufficient to assess site eligibility for listing in the NRHP. As of FY2001, the Pennsylvania 99th RSC historic properties inventory has yet to be undertaken, although several individual facilities have been subjected to cultural resources investigations or have been included in larger studies (see Section 3.3, above). Potential historic properties located on the 99th RSC property within the Commonwealth of Pennsylvania, fall into the following principal categories: archaeological sites (subsurface cultural features and artifacts); buildings, structures and objects; and properties having traditional,

religious or cultural significance. Groups within any one category of historic properties may form a district (e.g. a group of historic buildings forms a historic building district). NHLs may fall under any category of historic property, e.g. archaeological site, historic building, etc. and are always included in the NRHP. By definition, historic properties have been formally determined eligible for listing in the NRHP through written consensus agreements with the SHPO, or by written determination of the Keeper of the National Register, National Park Service (NPS).

The development of an archaeological predictive model will enable the 99th RSC to limit future inventory activities that are related to the identification of archaeological sites to those areas identified as high sensitivity areas. In addition to excluding impact areas or safety hazard zones from inventory procedures, areas of significant recent disturbance and steep slopes will also be excluded from such investigations since the likelihood of intact deposits in these areas is negligible.

[NOTE: A property of traditional, religious, and cultural significance may be defined generally as a place that is eligible for inclusion in the NRHP because of its association with cultural practices or beliefs of a living community that (a) are rooted in that community's history, and (b) are important in maintaining the continuing cultural identity of the community (National Register Bulletin 38:1). Properties of traditional, religious, and cultural significance are most often eligible for the NRHP under National Register criterion A [36 CFR § 60.4(a)], because of their association with important events, or patterns of events, in a community's traditional history and culture. American Indian sacred sites fall within the definition of properties of traditional, religious, and cultural significance. The NHPA provides very specifically that certain kinds of properties of traditional, religious, and cultural significance -- American Indian sacred sites -- can be eligible for the NRHP, and that federal agencies have to consult with American Indian groups that may value such sites [16 U.S.C. 470a(d)(6)(B)].]

99th RSC Historic Properties

Historic properties in the Pennsylvania 99th RSC inventory are presented below. For convenience, they are grouped into the following property types: archaeological sites; historic buildings, structures, and objects; and properties of traditional, religious and cultural significance. NHLs are included in the appropriate category. Annual updates to the inventory of historic properties are included as part of the five-year plan for the Cultural Resource Program (CRP).

Archaeological Sites

Archaeological historic properties in the Pennsylvania 99th RSC inventory are listed in Appendix A of this HPC. The list includes site locational information, site-specific eligibility assessments and current site condition. As site locational information is sensitive and distribution has the potential to jeopardize either the historic property or the confidentiality concerns of federally recognized American Indian tribes that information is not included as part of this document. General information regarding the number, eligibility status and current condition of the archaeological sites is provided below.

As described in Section 3.3, as of FY2001 only two archaeological sites have been recorded on 99th RSC facilities in Pennsylvania. These are sites 36Fa7, on facility PA012; and site 36Cw413, on facility PA118. Both of these prehistoric sites were subjected to Phase I and Phase II archaeological investigations (Cunning et al. 2000; Diamanti 1996). Neither site was recommended eligible for listing in the NRHP, findings with which the PHMC concurred. No additional archaeological investigations are required at either facility.

[NOTE: All archaeological sites within 99th RSC facility boundaries are subject to Federal laws and regulations governing their evaluation and preservation. However, those archaeological collections, including artifacts and documentation that may have been recovered from 99th RSC facilities prior to 99th RSC assumption of control of that property, are considered the responsibility of the previous landowner, not the 99th RSC.

Buildings, Structures and Objects

Buildings, structures and objects that are considered eligible for the NRHP or require evaluation for such determination are listed below. The location of each property is provided as well as its current condition and eligibility status.

A review of the historic buildings and structures files and the NRHP files maintained at the PHMC in Harrisburg indicates that, with the exception of the three architectural resources outlined in Section 3.3 above (PA032/PA034 at Fort Indiantown Gap, PA070/PA071/PA072 at SGT Charles E. Kelly Support Facility, and PA085 at the old Reading USARC), no previously recorded historic buildings or structures lie within the facilities owned or leased by the 99th RSC in Pennsylvania. The SGT Paul Beck AFRC (PA007) is adjacent to a NRHP property, the Bellefont Gunnery; undertakings will require evaluation for impact on the historic property. Activities in at the Adams County Memorial USARC (PA 039) will also require assessment due to its within a Gettysburg Historic District, despite that it is not a contributing asset. However, it should be noted that the file of previously recorded buildings and structures consists almost entirely of those structures recorded as a result of county-level architectural surveys; specifically, structures that were readily visible from public roads. A number of counties in Pennsylvania have never been subjected to a county-level architectural survey, and many of the surveys are incomplete. Based on this observation, it is likely that the majority of the buildings and structures owned or leased by the 99th RSC in Pennsylvania have never been subjected to architectural survey or evaluation by outside agencies.

Accordingly, Table 3.4-1 below provides a list of those buildings and structures owned or leased by the 99th RSC in Pennsylvania that have been determined eligible for listing on the NRHP, have been listed on the NRHP, and those that by virtue of being constructed prior to 1955 will require evaluation as part of the five-year plan.

Table 3.4-1: List of Buildings, Structures, and Objects at 99th RSC Facilities in Pennsylvania

Facility ID	Facility Name and Location	Building No.	Condition	Eligibility Status
PA032 PA034	USARC #2/FIG USARC #2 Service Road Fort Indiantown Gap, PA 17003	Bldg. 3-50	Unknown	Unevaluated, constructed in 1937
PA070	SGT Charles E. Kelly USARC #2 5 Lobaugh Street Oakdale, PA 15071-5001	Bldgs. S-20, 21	Good	Part of potentially eligible historic district, constructed 1961
PA071	SGT Charles E. Kelly USARC #1 Kelly Spt. Fac. Oakdale, PA 15071-5001	Bldg. S-5	Good	Part of potentially eligible historic district, constructed 1961
PA072	AMSA 105(G) Kelly Spt. Fac. Oakdale, PA 15071-5001	Bldg. S-16	Good	Part of potentially eligible historic district, constructed 1960
PA077	LTG Malcolm Hay USARC (closed) 950 Saw Mill Run Blvd. Pittsburgh, PA 15226-1194		Poor	Unevaluated, constructed 1952
PA078	COL Harold E. Steele USARC 6482 Aurelia St. Pittsburgh, PA 15206-4036		Unknown	Unevaluated, constructed 1952
PA085	Reading USARC (old) 1800 N. 12th St. Reading, PA 19607		Good	Eligible, constructed 1923
PA089	SGM Samuel P. Serrenti Memorial USARC 1801 Pine St., Scranton, PA 18510		Unknown	Unevaluated, constructed 1951

Properties of Traditional, Religious and Cultural Significance

All historic properties within this category are listed in Appendix B of this HPC. The list includes site locational information, site-specific eligibility assessments and current site condition. As site locational information is sensitive and distribution has the potential to jeopardize either the historic property or the confidentiality concerns of federally recognized American Indian tribes that information is not included as part of this document. General information regarding the number, eligibility status and current condition of these sites is provided below.

The PHMC does not identify any properties of Traditional, Religious, or Cultural significance within the state as of FY2001. It is recommended that such properties be identified in consultation with the appropriate American Indian tribal associations as part of the five-year plan.

Inventoried Areas with No Historic Properties

The following areas have been inventoried for historic properties but none were identified. Consequently, undertakings in these areas are unrestricted. There is however, always the possibility that deeply buried or otherwise obscured archaeological materials and features may have escaped detection by standard archaeological procedures. Should such materials be identified during the course of the undertaking, the procedures outlined in HPC SOP 11, "Inadvertent Discovery," should be followed.

As noted above, based on data provided by the 99th RSC, two archaeological investigations (at facilities PA012 and PA118) have been commissioned by the USAR on RSC owned properties within the Commonwealth of Pennsylvania. Both facilities contain prehistoric sites that were determined not eligible for listing in the NRHP. Additionally, the USAR commissioned an architectural assessment of facility PA085, which was determined eligible for listing in the NRHP. As of FY2001 the 99th RSC is in the process of excessing this facility. Other 99th RSC properties located on larger military installations (such as Fort Indiantown Gap, Tobyhanna Army Depot, New Cumberland Army Depot, and SGT Charles E. Kelly Support Facility) have been included in cultural resources investigations undertaken by those installations, as described in Section 3.3.

Several 99th RSC facility locations were evaluated by the PHMC in advance of construction activities, and were determined not to require any archaeological investigations. These facilities are PA031, PA032, PA038, PA058, PA060, and PA159. Facility PA166, also evaluated by the PHMC, was determined not to require any archaeological or historic structures survey prior to new construction.

3.5 Historical Contexts

The following discussion serves as a synthesis of various sources regarding the known prehistory and history of the region. A review of specific regional information is used to provide a framework within which the problem of cultural resources significance may be addressed, as well as suggesting research questions that may be formulated based on the extant material cultural of the installation. The review of literature describing the cultural resources of the Commonwealth of Pennsylvania provides an informative background against which research problems and hypotheses may be developed to aid in achieving an appropriate fit between research questions, the 99th RSC Pennsylvania historic properties database, and the physical parameters of the 99th RSC facilities.

Historical contexts are defined as "the patterns, themes or trends in history by which a specific occurrence, property or site is understood and its meaning (and ultimately its significance) within prehistory or history is made clear." At a minimum, an historical context is a body of information about past events and historic processes organized by a theme, place, and time. In a broader sense, an historical context is a unit of organized information about our prehistory and history according to the stages of development occurring at various times and places (NPS 1985). Such contexts identify areas of current research interests as well as gaps in recorded knowledge of prehistoric environments and cultures. In most instances, if research contexts are well-defined, it is possible to identify those sites that have NRHP significance at the time of discovery, rather than wait for a formal evaluation to assess significance. The significance of military landscapes must be evaluated in the context of the broader national and military history associated with their development.

Historical contexts are developed by:

- identifying the concept, time period, and geographic limits for the context;
- collecting and assessing existing information about these limits;
- identifying locations, patterns, and current conditions of the associated property types;
- synthesizing the information in a written narrative; and
- identifying information needs.

[NOTE: Summary historical contexts are available from the U.S. Army Environmental Center (AEC) at Aberdeen Proving Ground, Maryland. These documents should be used by the 99th RSC to evaluate cultural resources, although more specific historical contexts applicable to the state or facility may be necessary. Contexts are located on the AEC home page, [http://apgea.army.mil/usaec/conservation/cultural01.html (2001)], and include (1) National Historical Context for Department of Defense (DoD) Installations, 1790-1940, (2) Cold War Context, (3) Historic Context for DoD Installations World War II Permanent Construction, and (4) Historic Context for Quartermaster Corps Standardized Building Plans. The 99th RSC should utilize these resources by downloading available files from the AEC website.]

"Property types" are groupings of individual sites or properties based on common physical and associative characteristics; they serve to link the concepts presented in the historical contexts with properties illustrating those ideas (NPS 1983).

A summary of an area's history can be developed from a set of historical contexts. The formulation of contexts is a logical first step in the design of any historic properties survey. It is also crucial to the evaluation of individual properties in the absence of a comprehensive survey of a region (NPS 1983:9). The result is an approach that structures information collection and analyses. This approach further ties work tasks to the types and levels of information required to identify and evaluate potentially important cultural resources.

The historical contexts, developed specifically for the Commonwealth of Pennsylvania are presented below. As part of the long-term management goals of this ICRMP, GIS maps will be developed for each of the historical contexts, depicting the cultural landscape at that time. The maps will illustrate spatial patterning of cultural features and suggest expected property types and archaeological resources that are associated with each context. The potential research value and significance of the existing and expected archaeological resources and existing architectural resources identified within the boundaries of the 99th RSC properties within the Commonwealth of Pennsylvania, should be evaluated in terms of the historical contexts.

Prehistoric Climate

The following reconstructions of vegetation and climate trends since the last period of full glaciation are taken almost entirely from Jonathan Adams' compilation of North American vegetation and climate history for the last 150,000 years (Adams 1999). Adams' compilation is based on a number of recent pollen and isotope studies and features a number of time slice reconstructions of vegetation distributions across North America. The compilation, complete with links to the time slice maps and other data sources, is available on the Oak Ridge National Laboratory (TN) website: http://www.esd.ornl.gov/projects/qen/nercNORTHAMERICA/html (Adams 1999).

Full Glacial (ca. 21,000 to 14,000 years B.P.) - During the full extent of the Wisconsin glacial, an ice sheet measuring thousands of feet in thickness covered most of Canada and much of the northern United States. Colder and often drier-than-present conditions predominated across most of the United States during this entire time period, with conditions becoming warmer and moister only in the extreme northwest (Alaska, Beringia) ca. 16,000 years B.P. Much of the southeastern United States was wooded or forested, almost as far north as the edge of the ice sheet. In general, this forest cover seems to have been more open than today, especially on the Atlantic coastal plain, and it also thinned out westward, giving way to forest-steppe and then, open dry steppe in the mid-west. To the east of the Appalachians, there was a high proportion of cool climate pines and often the presence of prairie herbs amongst the trees (e.g., Brook and Nickmann 1996). On the Atlantic coastal plain, there are indications of shifting sand dune activity that, together with the predominance of jack pine, suggests that the woodland was fairly open (Wells 1992). In general, it seems from the pollen profiles that the climate in the eastern United States was drier than most boreal forest in Canada or Siberia exists under at present (Jackson et al. 1997). Spruce (*Picea*; possibly including an extinct warm temperate species) was common and may have formed dense stands in places, including the Gulf of Mexico coastal plain. Mixed in with the mainly coniferous forests, and extending quite far north, were temperate tree taxa (e.g. *Juglans, Acer, Quercus, Fagus*) occurring at low densities but perhaps locally abundant on moist soils (Delcourt et al. 1980, Jackson et al. 1997).

The 'Younger Dryas' (ca. 13,000 to 12,200 years B.P.) - Beginning approximately 14,000 years B.P., in response to the retreat of the ice sheets northwards, temperate tree species began to spread and increase in abundance through the forests and open woodlands of the eastern United States, although the vegetation remained

US Army Corps
of Engineers
Baltimore District

CONCEPT DESIGN/STUDY RESERVE CENTER VEHICLE WASH SITES

79th ARCOM
GREENCASTLE, PA
WILKES-BARRE, PA
PEDRICKTOWN, NJ

30% SUBMISSION

JUNE 1995

Table of Contents

Part 1 Background and Scope 1

Part 2 General Considerations 1

A. Type of Waste 1

B. Disposal Alternatives 1

C. Miscellaneous Items 2

Part 3 Site-Specific Considerations and Recommendations . . . 5

A. Greencastle, PA. 5

B. Wilkes Barre, PA. 8

C. Pedricktown, NJ. 11

Appendices

A. Oil Separators and Grit Tanks

B. Wash Pad Details

C. Canopy Data

D. Recycle System

E. Greencastle, PA - Site Plans and Recommendations

F. Wilkes-Barre, PA - Site Plans and Recommendations

G. Pedricktown, NJ (Building 404) - Site Plans and Recommendations

H. Pedricktown, NJ (Building 506) - Site Plans and Recommendations

I. Cost Estimates

Part 1 - Background and Scope

The scope of work for this project is to upgrade four vehicle wash facilities at three reserve centers in the 79th ARCOM unit. Two of the reserve centers are located in Greencastle and Wilkes Barre, PA; each location has one vehicle wash site. The third location is in Pedricktown, NJ which has two wash sites; one at building 404 and another at building 506.

With the exception of building 506, all of the above wash facilities were built in the 1950-60's era when environmental concerns were very relaxed. It is not surprising that these facilities discharge untreated water directly into the storm drainage system which was common practice at that time. In their present condition, none of these facilities are legally operable as they do not comply with the most current environmental regulations or practices.

The building 506 wash site constructed in 1978 has a legally acceptable discharge into the sanitary system, but is inoperable due to a clogged oil-water separator.

Based on the above conditions, the intent of this 30% concept design/study is to evaluate and recommend feasible, and environmentally acceptable upgrades at each of the four sites.

Part 2 - General Considerations

A. Type of Waste:

At reserve centers, vehicle wash water usually contains minor amounts of grit, engine oil/grease residue, and cleaning detergents. Typical detergents are biodegradable and non-emulsifying. This type of discharge is classified as industrial, since it contains hydrocarbons and organic compounds.

B. Disposal Alternatives:

There are four alternatives for disposal listed in order of increasing preference:

- Point source discharge
- Holding tanks
- Recycle system
- Public sewer

1. Point source discharge. Any discharge to a natural drainage course. It requires an NPDES permit that is specific to

the quantity and composition of the generated waste. The state normally requires an economic justification to preclude all other alternatives, making this a last resort disposal option. Before issuance of a permit, the proposed discharge point is modeled, waste characteristics are defined, and the degree of treatment is established.

System operation involves flow monitoring and monthly sampling of the treated effluent. The generator is responsible for all record keeping and sampling. Also, the permit is only valid for a limited time (usually 5 years) and must be renewed. The renewed permit may have more stringent treatment levels.

Wash facilities for this project are very small in size. For the reasons stated above, a point source discharge is <u>not</u> considered a practical alternative.

2. <u>Holding tanks.</u> Underground holding tanks would store wash water and be pumped out periodically. Because of the volume of waste involved, holding tanks are not considered feasible for this project. Additionally, a canopy over the wash pad would be needed to keep out stormwater.

3. <u>Recycle system.</u> Basically this is a closed system in which wash water is treated and recycled without any discharge to the environment. The system, consists of a specially designed wash pad with grit trap, package type treatment system, holding tank, and recirculation pumps. Again, a canopy is needed to keep stormwater out.

A recycle system was considered for Greencastle, but not recommended for reasons stated under Part 3 - Site-Specific Considerations. Construction permit from PENNDER would be required.

4. <u>Public sewer.</u> This is the most desirable alternative. Approval is needed from the municipal authority. Usually some form of pretreatment for solids and oil removal is required. Sometimes a canopy over the wash area for exclusion of rainwater is mandated by the municipal authority. A public tie-in is possible at all locations.

C. Miscellaneous Items:

1. <u>Grit tanks.</u> Amount of solids anticipated is light to moderate, since vehicles are wheeled type and appear to have limited off road use. It is expected that vehicles will not be driven extensively through sticky clay type soils, and that accumulation of dirt on the chassis should not be heavy.

For heavy dirt, steam cleaning is generally used.

Heavily soiled vehicles are normally taken to a nearby AMSA for cleaning and maintenance. Extensive washing of heavily soiled vehicles will require more frequent cleaning/pumpout of the grit tanks.

Based on previous experience for similar installations, tanks are sized for a 20 minute retention time at peak flow. Tanks are rectangular in shape and baffled to optimize solids removal. Tank size of 4' minimum width by 6'-8' long with 4 foot static water depth will allow ample retention time and storage for one foot of settelable solids.

Sizing calculations and details are shown in Appendix A.

2. Oil-water separators. There are two types: prefabricated equipment available from AFL or McTighe Industries, and the baffled concrete type. Prefab units employ slanted coalescing plates to improve removal efficiency; concrete units rely solely on gravity for removal, and are longer than prefabricated units. Concrete separators are chosen for the following reasons:

- Least prone to solids clogging due to the absence of coalescing plates.

- Oil concentrations and flow are low, so high efficiency of prefab units is not required.

- Concrete separator is easier to maintain and clean because of its open interior construction and simplicity of operation.

- Cost is expected to be less than a prefab unit, especially when an extension is required to raise it to grade.

- Prefab units hold less oil and need to be cleaned more frequently.

Oil water separators for this project are designed on gravity separation principles based on Stokes Law. Guidelines from the American Petroleum Institute (API) Publication 421-Design and Operation of Oil/Water Separators are used.

Sizing calculations for required length are based on temperature, flow, density of wastewater, and oil. API calculations are based on a 150 micron oil globule. Typically winter conditions govern due to a slower rate of rise caused by higher densities. A temperature of 35 degree F is assumed for winter operation.

Oil weights are classified by a numerical API rating system. A value of 20 corresponds to a heavy oil, 25 to a mixture of

light and heavy oil and 40 to a hydrocarbon product a little lighter than diesel fuel. For gravity separation, the heavy API 20 oil governs and is used for all sizing calculations. Removal to 50 ppm or less can be expected from an API designed separator.

Oil and grease passing through the unit is diluted with piped flow to the municipal wastewater plant. Fats, oils, and grease in municipal wastewater is treatable down to 20-50 ppm. Hydrocarbon based oils and grease are low in municipal wastewater due mainly to removal at the source.

Sizing calculations and details for oil-water separators are shown in Appendix A.

3. Tank access. The entire top area of grit and oil tanks is above grade. Aluminum access covers are hinged and placed in sections to allow convenient inspection and cleaning on a periodic basis. Removal of accumulated oil and solids are easily accomplished by a local disposal service having a vacuum operated pumpout truck. Federal regulations do not classify oils and grease as hazardous waste.

4. Wash pads. Wash pads should be curbed to direct runoff around the pad. However, any rain falling directly on the pad will drain through downstream removal devices, if the pad is not covered. Run off rates for a 3 inch/hr storm based on the rational method are as follows:

- 20' x 36' pad (proposed for Greencastle, Wilkes-Barre, and Pedricktown Building 404): 20 gpm

- 30' x 60' pad (existing at Pedricktown Building 506): 50 gpm

It is unlikely that vehicles will be washed during an intense storm, so runoff is not included in the peak flow rates used to design downstream removal devices. If the pad is hosed down after each use, oil and grease concentrations should be very low during rainy periods.

Wash pad details are shown in Appendix B. For Pedricktown Building 506 site, the existing pad will be reused. It lacks any curbing, however, and the addition of one around the pad is recommended.

5. Stormwater diversion.

a. Canopy option. Protective covering or canopy over the wash area has been mentioned numerous times. If the local authority doesn't require one, then it can be omitted. It is good practice however, to keep rainwater out, since it contributes an undesirable load to the receiving wastewater plant.

Catalog cuts of canopies are included in Appendix C. They are sized to cover the wash area, and offer a vehicle clearance height of 15 feet. Canopies are pre-engineered steel columns with roof deck.

Three types of roof decks are considered: 1) wood deck and laminated beams with shingles and downspouts as manufactured by RCP Shelters, Inc. 2) All steel fabrication as manufactured by RCP Shelters, Inc. and 3) Extruded aluminum deck as manufactured by Dittmer.

In-place costs for pre-engineered wood, steel or aluminum decked canopies are included as a separate item, since it is uncertain whether they will be required at all of the sites. See Appendix I.

b. Valve option. Another option for diversion of rainwater is a valved connection to the storm drain. When the pad is not used, the sanitary sewer valve is shut and the storm drain valve is open. This option is not recommended for the following reasons:

- Failure of personnel to properly operate the valves.

- Failure of the valves to properly shut due to resultant wear or sediment/debris causing improper seating.

-Interconnection creates a potential for industrial waste discharge to the storm sewer which violates the Clean Water Act.

- Municipal authority is not confident that personnel will operate the valves.

6. Topographic survey. Upon approval to proceed with recommended improvements, arrangements for a topographic survey of each site will be initiated.

Part 3 - Site-Specific Considerations and Recommendations

A. Greencastle USARC/AMSA-113, PA:

1. General. Reserve center and AMSA built in the mid 1940's. Water is supplied from an on-site well and elevated tank. Sewage disposal is on-site septic tank-tile field. The site was visited by Baltimore District personnel on 3/22/95.

2. Site conditions.

a. Site is flat with mild slope draining away from

buildings. During wet periods, runoff from asphalt and gravel surfaces ponds near the entrance gate. Remaining areas drain towards surrounding farmland. There is no stormwater detention pond.

b. Presently, no vehicles are being washed. Vehicles were previously washed on a gravel lot near the maintenance shop. Drainage is to a clogged inlet near the wash area. A 3/4-inch post hydrant and steam generator hookup pad further define the wash area, which is essentially part of the large gravel lot used for vehicle storage.

c. Subsurface conditions: Locations and boring logs of any subsurface investigations that may have been performed at this site are not available. However, due to the limited lateral extent and shallow nature of any excavations which may be performed on the USARC for the completion of this project, this should not prove a significant disadvantage. The subsurface condition which has the greatest potential impact on this project is the shallow bedrock at this site. This condition is readily apparent from the many rock outcrops which can be seen in this area. This feature will influence this project's cost if rock trenching becomes a project requirement. Due to the unavailability of boring logs, the groundwater conditions at this site are not known. However, given the limited topographic relief at this site, a need for dewatering during construction should be anticipated.

d. Facility is surrounded by private property except for access from Pensinger Road about 0.6 miles south. There is potential for development of adjacent areas. Selected disposal method should consider environmental impacts on surrounding property. Property line map and up-to-date site plans were not available.

3. Vehicle information. Only wheeled vehicles are on the premises. Estimated vehicle weight is 5-6 tons. Based on size of observed vehicles and input from user, a 20' x 36' wash area should be adequate.

4. Washwater volume. Reserve center personnel estimate as follows: Frequency - 6 to 8 x per month average, 12 x per month peak; duration - 2 hours; average flow - 10 gpm; estimated water use - 1200 gallons/wash-day.

5. Disposal alternatives.

a. Recycle system. Briefly discussed previously under Part 1-GENERAL CONSIDERATIONS. The system consists of a wash pad with integral solids collection, treatment unit, holding tank and recirculation pumps. Product literature from RGF Environmental Systems is included in Appendix D.

1) Indoor installation. The 96th ARCOM in Salt Lake City, Utah operates a small indoor type system. This is a relatively new washing concept for reserve centers, and the system is used on an experimental basis. It works well for light duty purposes, but the unit is new and has yet to prove itself on a long term basis. Holding tank size in this arrangement is 400 gallons.

2) Outdoor installation. The 96th ARCOM is going to pilot an outdoor installation with moderate to heavy use. Ability of this system to handle a higher volume of water and solids will be tested. An outdoor installation will require a heated shelter for the 8' x 10' treatment unit and a canopy over the wash area.

b. Public sewer.

1) Availability: Antrim Township about 0.6 miles from the site at Pensinger Road.

2) Connection requirements: Grit tank and oil separator pretreatment. Verbal indication from township is that a canopy is not required. Water meter is required on the wash rack service.

3) Submittals: Approval of plans is required.

c. Connection to existing on-site system. Pennsylvania DER will not allow connection of wash pad to the existing septic tank system.

6. Recommendations.

a. Recycle system is not recommended for the following reasons:

1) Long term performance related to use at reserve centers cannot be evaluated.

2) Suitability of system for outdoor use is unknown especially problems associated with freezing and solids collection.

3) Reliability of system when washing moderate to heavily soiled vehicles, and associated O & M problems cannot be determined until a system is pilot tested under these conditions.

b. Public sewer connection is the most desirable alternative. Proposed arrangement is shown in Appendix E and described as follows:

1) Install new 20' x 36' concrete wash pad, grit

tank, oil separator, water service and hookup pad for steam generator. Connection to public sewer will require a pump station and 4-inch force main.

2) Consider connection of the septic system to the new lift station.

7. Cost estimate for public sewer connection shown in Appendix I.

8. Pavement design: The latest Department of the Army strength and frost criteria for pavement design will be used as outlined in the following technical manuals:

TM 5-822-2	General Provisions and Geometric Design for Roads, Streets, Walks, and Open Storage Areas
TM 5-822-5	Pavement Design for Roads, Streets, Walks, and Open Storage Areas

9. Specifications Outline: The latest edition of the following specifications will be incorporated into the contract documents at this project site:

Section 02222	Site Grading and Excavation, Trenching and Backfilling for Utilities Systems
Section 02511	Concrete Curbs and Gutters
Section 02551	Replacement of Bituminous Paving
Section 02660	Water Lines
Section 02730	Sanitary Sewers
Section 02732	Force Mains; Sewer
Section 03300	Concrete (Minor Requirements)
Section 11310	Sewage Pumps

B. Wilkes-Barre USARC, PA:

1. General. This is a 400 man center constructed in the early 1950's. The facility has public water and sewer hookups. Baltimore District personnel visited the site on 4/25 and 26/95.

2. Site Conditions.

a. Site is located between Route 115 and Route 315.

Entrance is from Route 315. In the early 90's, the entrance area was changed, due to the widening of the highway and addition of a traffic light on 315.

b. Presently no vehicles are being washed. Vehicles were previously washed near the vehicle maintenance garage.

c. Existing wash pad is constructed above a concrete paved ditch. An inlet is centered in the pad, where the ditch transitions to a 24-inch pipe. The pipe discharges to a downstream inlet along 315. Existing pad is 17 feet wide by 33 feet long. Public sewer is about 220 feet away.

d. Subsurface Conditions: Locations and boring logs of subsurface investigations performed at this site are available. Six borings were advanced apparently in late 1951. However, the drilling technique that was used is not known. From the ground surface, and extending to a depth of between 3.0 and 7.0 feet is a weathered shale mixed with silt that results in a USCS symbol of GM. This is underlain by weathered gray to black shale. Groundwater was not encountered in these drill holes, which ranged in depth from 10.0 to 22.5 feet. On 25 Apr 95 a drill hole was advanced by hand auger. Topsoil, gravel, and roots were encountered to a depth of 1.0 foot. From 1.0 foot to the bottom of the hole at 2.5 feet was a non-plastic silty gravel (GM) The hole could not be advanced beyond a depth of 2.5 feet due to the gravel content. Groundwater was not encountered. Groundwater should not have an impact on construction. Rock excavation, though a possibility, should not be difficult due to the weathered condition of the shales that predominate at this site.

3. Vehicle information. Wheeled vehicles. Largest vehicle to be washed is a 6-wheeled shop truck with dimensions of 354 inches by 98 inches by 128 inches high; gross vehicle weight 32,470 pounds.

4. Washwater volume. Center personnel anticipated light usage, but could not quantify since their activity level is minimal at this time. With one wash pad in service, we estimate bi-monthly operation at 1200 gallons per use.

5. Disposal options.

a. Public sewer:

1) Availability: Plains Township. Manhole located at southeast corner of site.

2) Connection Requirements: Township would like to review our proposal. It is anticipated that a grit tank and oil separator will be required. A canopy over the wash area may also be required pending their review.

6. Recommendations.

a. Connect Plains Township sewer system.

b. It would be difficult to retrofit the existing wash pad without impacting the drainage ditch and piping beneath it. Also, the pad would need extensive repairs, and possibly total replacement if retrofitted for a sanitary connection. It should be abandoned in place.

c. Install a new 20' by 36' concrete wash pad, grit tank and oil separator as shown in Appendix F. Cover the wash area with a canopy, if required by the local authority.

d. Two possible wash pad locations are shown. Alternate 1 requires a water service connection to the pad. Alternate 2 situates the pad closer to the building, so an existing hose bibb can be utilized. Alternate 2 will require some additional paving to form an entrance to the pad.

7. Cost estimate for recommended improvements shown in Appendix I. A separate estimate is included for the addition of a canopy if required.

8. Pavement Design: The latest Department of the Army strength and frost criteria for pavement design will be used as outlined in the following technical manuals:

TM 5-822-2	General Provisions and Geometric Design for Roads, Streets, Walks, and Open Storage Areas
TM 5-822-5	Pavement Design for Roads, Streets, Walks, and Open Storage Areas

9. Specifications Outline: The latest edition of the following specifications will be incorporated into the contract documents at this project site:

Section 02222	Site Grading and Excavation, Trenching and Backfilling for Utilities Systems
Section 02511	Concrete Curbs and Gutters
Section 02551	Replacement of Bituminous Paving (or Bituminous Paving if new pavement is required)
Section 02660	Water Lines
Section 02730	Sanitary Sewer
Section 03300	Concrete (Minor Requirements)

C. Pedricktown, NJ - Buildings 404 and 506:

1. General. The Pedricktown site is a Reserve Center and vehicle maintenance facility constructed in stages from 1918 to 1960. There are several buildings on the site, including warehouses, maintenance garage (Building 404), administrative buildings, and a Corps of Engineers field office. Many of the buildings are unoccupied due to a reduced activity level in recent years. The center is still undergoing changes, and the future impacts of these changes are uncertain. The center is situated on 55 acres of land which is leased from Fort Dix, NJ. The site was visited by Baltimore District personnel on 4/27 and 28/95.

2. Site Conditions.

a. The area is served by on-site water and sewer systems. An elevated storage tank supplies the water system. A sewage treatment plant is located at the northwest corner near building 506. The plant is operated and maintained by Center personnel and Fort Dix.

b. There have been operational problems with the plant during wet weather due to excessive inflow. This increased hydraulic loading has resulted in previous violations of the discharge permit.

c. Fort Dix real estate department is currently negotiating a base-wide connection to the public sewer. If this occurs, the sewage treatment plant will be abandoned.

d. Subsurface Conditions. Locations and boring logs of subsurface investigations performed at this site are available. The Versar Corporation of Bristol, PA advanced 27 drill holes by the hollow-stem auger method in June of 1993. The purpose of this subsurface exploration program was primarily to obtain soil samples for analysis of chemical content. The soil samples were not classified by the laboratory in accordance with Unified Soil Classification System symbols. In a report by Versar generated as a result of this program, the soils at this site were classified as sand with gravel and a trace of fines (SP) or sand with fines and a trace of gravel (SM). Depths to groundwater in these 27 drill holes ranged from 2.0 to 6.0 feet, with a typical depth being 3.0 feet. The Versar drill holes ranged in depth from 4.0 to 36.0 feet, and in none of them was bedrock encountered. On 27 April 1995 a drill hole was advanced by hand auger. The soils encountered were consistent with those found during the Versar program. From the ground surface to a depth of 0.5 feet was topsoil with grass and roots. From 0.5 feet to the bottom of the hole at 5.0 feet was silty sand with gravel (SM), or brown sand (SP). Groundwater was encountered at a depth of

2.5 feet. Dewatering of excavations can be expected as a project requirement. Rock excavation is not anticipated.

e. Existing Wash Facilities

1) Building 404. There are two concrete wash pads located outdoors, against the building near the garage entrance. Each pad is connected to the storm sewer. Inlet drains at each pad are clogged with dirt and inoperable. Pads are concrete, rectangular with dimensions of 16' x 26' and 15' x 31' respectively.

a) There is an existing 15-inch sanitary sewer along Depot Avenue about 270 feet southwest of the existing wash site.

2) Building 506. This site has one 30' x 60' concrete wash pad constructed in 1978. There are two 3/4-inch wash hydrants and a steam genny hookup. Overall, the pad and centered drain are in good condition. A 2-foot square oil separator precedes discharge to an 8-inch sanitary line along West Road. Vehicles cannot be washed because the oil separator is clogged with dirt.

a) Oil separator is undersized and not preceded by any form of solids removal.

b) Wash pad does not have a curb to divert surface drainage.

3. Vehicle information. Only wheeled vehicles anticipated. Dimension of largest vehicle not available, but user indicated that existing pads are adequate size. Due to uncertainty of future events, the base didn't know how many vehicles would be washed on a daily basis. It was advised that one pad at building 404 would be adequate.

4. Washwater Volume.

a. In view of the above uncertainties regarding the reserve centers future mission, it is difficult to accurately quantify washwater volume. Another factor is that vehicles from building 404 will also be washed at 506.

b. User indicated that peak monthly usage at both sites, as a ball part estimate, would be 2 hydrants operating 8 hours/day, 4X/month. Assuming 10 gpm average flow per hydrant, the demand is 9600 gals/wash-day and 38,400 gals/month.

5. Disposal Options.

a. Fort Dix personnel did not recommend any connection

to the sanitary system until problems at the treatment plant are resolved. Hopefully, there will be successful negotiations with the local municipality to accommodate a future base-wide connection and subsequent closure of the plant. Regardless of the outcome, the base should investigate and mitigate all sources of inflow into the sanitary system.

b. Public sewer data.

1) Availability: Carney's Point, Penns Grove Wastewater Treatment Plant.

2) Connection requirements. A site visit was made to the Penns Grove Wastewater Plant on 4/28/95. Their policies for connection of wash facilities were discussed with Mr. Rohfling, the plant operator.

a) Municipality would not give verbal approval for the wash rack connections without seeing a proposal first. They would like to see plans, flow estimates, and composition of the wastewater. As a minimum, they would require a grit tank and oil separator. Also, a canopy over the wash areas would probably be required.

b) It should be noted that the wash facilities would have a negligible impact at the municipal plant. Their added contribution is a very small fraction of the total flow. Furthermore, the concentration of pollutants would be greatly reduced when diluted with the overall flow.

6. <u>Overall Recommendations.</u>

a. Include connection of wash facilities in negotiations for the Carneys Point project. Submit all necessary information needed for approval.

b. Even if negotiations fail, wash facilities could be tied into the existing system without creating additional inflow. Recommend the addition of a canopy over the wash area at each site for this purpose.

7. <u>Site-Specific Recommendations.</u>

a. Building 404

1) Inlets and piping at the pads need revised to allow a sanitary connection. The pads are surrounded by a concrete apron with asphalt overlay that extends from the garage entrance to Delaware Road which is also concrete. In order to avoid excessive pavement replacement, it is more practical to install a new pad closer to the sanitary sewer, and away from concrete areas. This results in a more open area for washing

vehicles, and allows more room for the installation of associated tankage. Proposed layout is shown in Appendix G.

2) Recommend existing wash pads be abandoned in place and that drainage inlets be plugged with concrete.

b. Building 506

1) Existing wash pad is in good condition and should be reused. Install new joint sealant. Install a new 2-inch high concrete curb around the pad perimeter. See curb details Appendix B.

2) Abandon existing oil separator and install a new grit tank and oil separator as shown in Appendix H.

8. Cost estimates for recommended improvements are shown in Appendix I. A separate estimate for canopies is also included.

9. Pavement Design: The latest Department of the Army strength and frost criteria for pavement design will be used as outlined in the following technical manuals:

TM 5-822-2	General Provisions and Geometric Design for Roads, Streets, Walks, and Open Storage Areas
TM 5-822-5	Pavement Design for Roads, Streets, Walks, and Open Storage Areas

10. Specifications Outline: The latest edition of the following specifications will be incorporated into the contract documents at this project site:

Section 02222	Site Grading and Excavation, Trenching, and Backfilling for Utilities Systems
Section 02511	Concrete Curbs and Gutters
Section 02551	Replacement of Bituminous Paving (or Bituminous Paving if new pavement is a project requirement.)
Section 02660	Water Lines
Section 02730	Sanitary Sewers
Section 03300	Concrete (Minor Requirements)

APPENDIX A

Oil Separators

Grit Tanks

Calculations and Details

Oil-Water Separator Design – API Manual Chapter 5

– DESIGN FOR GREENCASTLE, WILKES-BARRE & PEDRICKTOWN BLDG 404:

Design data gravity type separator:

average flow for 3/4" Hose bibb @ nozzle say 10 gpm.

Peak design flow: (one 3/4" hose bibb) = 20 gpm = 2.67 cfm MAX

Type of oil: API 20 deg

Oil globule size: 0.15 cm = 150 microns

	Summer	Winter
Temperature °F	80	35
Specific gravity oil S_o	0.93	0.94
Specific gravity water S_w	0.997	1.000
Absolute viscosity water μ (poises)	0.0085	0.0184

Rate of rise of oil v_T in feet/min (fpm):

$$v_T = 0.241 \left(\frac{S_w - S_o}{\mu}\right) =$$ 0.1900 0.0786

minimum allowable depth $d = 0.3$ to $0.5\ W$

minimum width $W = 6'$ use $d = 3'$

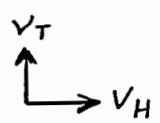

V_H = Horizontal velocity $= \frac{20 \times 60}{449 \times 6 \times 3} = 0.148$ fpm

$V_H = 0.148 < 3$ allowable (OK)

Turbulence and short circuit factor

(Based on V_H/v_T and graph Fig 5-3) F = 1.2 1.25

Length $L = F\left(\frac{V_H}{V_T}\right) d$

$L_{summer} = 1.2\left(\frac{0.148}{0.19}\right) 3 = 2.80'$

$L_{winter} = 1.25\left(\frac{0.148}{0.0786}\right) 3 = 7.06'$

Use separator size of 9' L × 6' W × 3' deep (Precast Concrete) for peak Q of 20 gpm

<u>GRIT TANK SIZE:</u> For 1-3/4" HOSE BIBB

Extreme peak flow 20 gpm Use $t_D = 20$ minutes min. $V = t_D Q = 400$ gal

Try Rectangular Precast Conc Tank 4' W × 6' L × 4' d = 96 CF = 720 gal

allow 1' storage for grit:

$t_D = \frac{V}{Q} = \frac{24 \times 3 \times 7.48}{20} = 26.9$ minutes > 20 (OK)

Oil/Water Separator Design – API Manual Chapter 5

– DESIGN FOR PEDRICKTOWN BLDG 506 ONLY

Average expected flow @ nozzle for 3/4" Hose bibb is 10 gpm.

Peak design flow 2- 3/4" Hose Bibbs Use max flow 40 gpm

Rate of rise of oil v_T in fpm: $v_T = 0.0241 \left(\frac{S_w - S_o}{\mu} \right)$

Summer $v_T = 0.0241 \left(\frac{0.997 - 0.93}{0.0085} \right) = 0.1900$ fpm @ 80°F

Winter $v_T = 0.0241 \left(\frac{1.00 - 0.94}{0.0184} \right) = 0.0786$ fpm @ 35°F

w (width) = 6' min $\quad d$ (depth) = $0.5w = 3'$

Summer:

$v_T = 0.19 \quad V_H = 0.30$ fpm $\quad \frac{V_H}{v_T} = \frac{0.30}{0.19} = 1.58 \quad F = 1.25$

L (length) $= F \left(\frac{V_H}{v_T} \right) d = 1.25 \times 1.58 \times 3 = 5.9'$

Winter:

$v_T = 0.0786 \quad V_H = \frac{40 \times 60}{449 \times 6 \times 3} = 0.30$ fpm $\quad \frac{V_H}{v_T} = \frac{0.30}{0.0786} = 3.82 \quad F = 1.36$

$L = 1.36 \times 3.82 \times 3 = 15.6$ ft

length of 15.6 ft is excessive; try other lengths and check flow rates.

Try $L = 10'$

$$V_H = \frac{L v_T}{F d} = \frac{10 \times 0.0786}{1.36 \times 3} = 0.19 \text{ fpm}$$

$$Q = V_H A = 0.19 \times 18 = 3.42 \text{ cfm} \times 7.48 = 26 \text{ gpm}$$

Try $L = 12'$

$$V_H = \frac{12 \times 0.0786}{1.36 \times 3} = 0.23$$

$$Q = 0.23 \times 18 = 4.16 \text{ cfm} \times 7.48 = 31 \text{ gpm}$$

Try $L = 14'$

$V_H = 0.27$ $\quad Q = 0.27 \times 18 = 4.85 \times 7.48 = 36$ gpm

For winter operation:

Design $Q = 31$ gpm or 16 gpm/hydrant – winter

For summer (80°F):

$$V_H = \frac{12 \times 0.19}{1.25 \times 3} = 0.608 \text{ fpm} \times 18 = 10.94 \text{ cfm} = 81.9 \text{ gpm}$$

Use 12' Long × 6' wide × 3' deep separator to cover worst case for winter temp 35°F @ 31 gpm flow.

GRIT TANK SIZING: for 2-3/4" hose bibbs

Anticipated flow 40 gpm max

$V_{(gallons)} = t_D Q = 10 \text{ min} \times 40 \text{ gpm} = 400 \text{ gal}$

Use rectangular tank 5'w × 8'L × 4' deep with grit storage of 1 foot depth.

$$t_D = \frac{40 \times 3 \times 7.48}{40} = 22.5 \text{ minutes} > 20 \text{ (OK)}$$

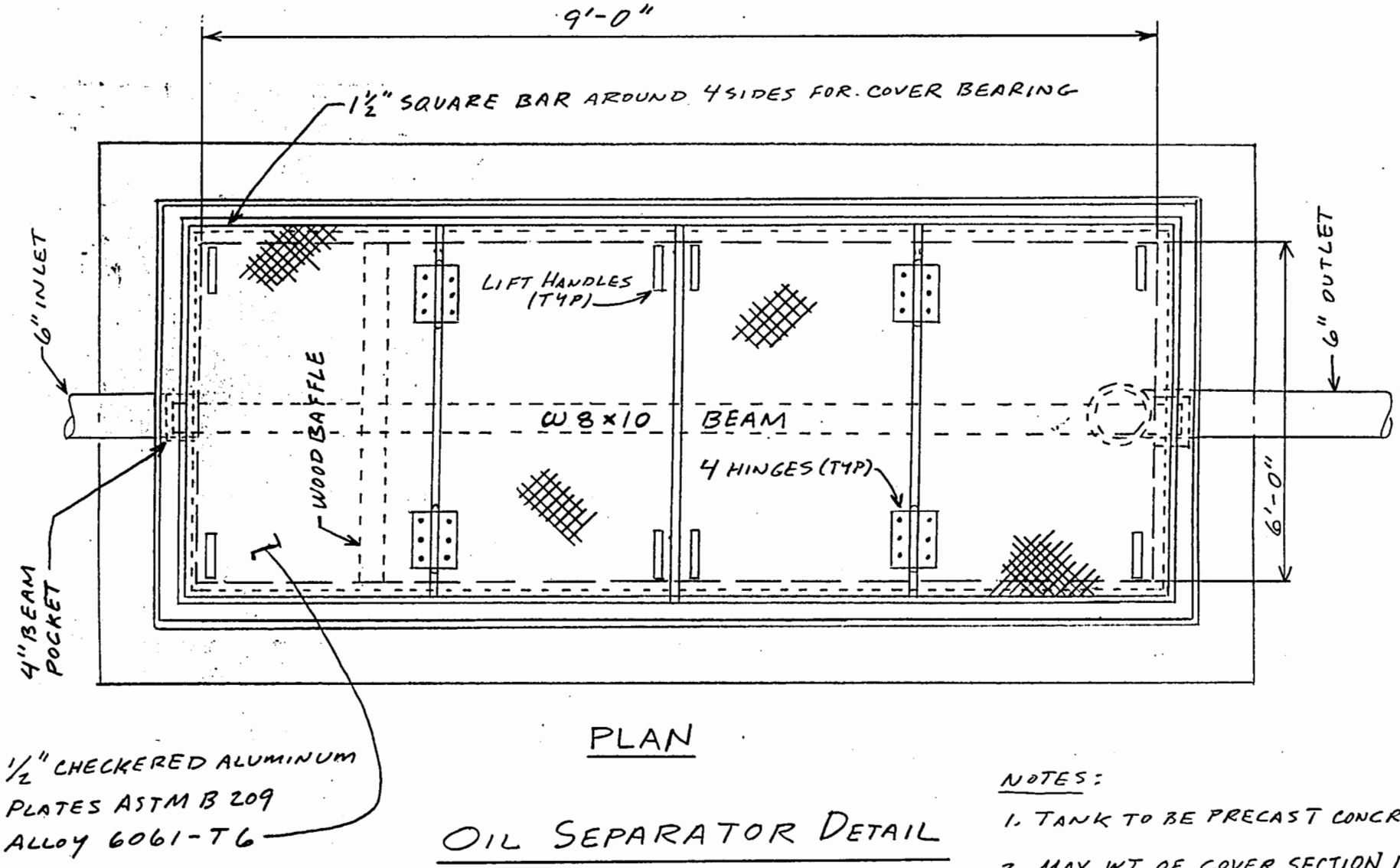

PLAN

OIL SEPARATOR DETAIL

NTS

PROPOSED FOR:
- GREENCASTLE USARC
- WILKES BARRE USARC
- PEDRICKTOWN, NJ BLDG 404

NOTES:

1. TANK TO BE PRECAST CONCRETE.
2. MAX WT OF COVER SECTION 100 LBS.
3. SEPARATOR SIZED FOR FLOW FROM 1-3/4" HOSE BIBB (ABOUT 20 GPM MAX).

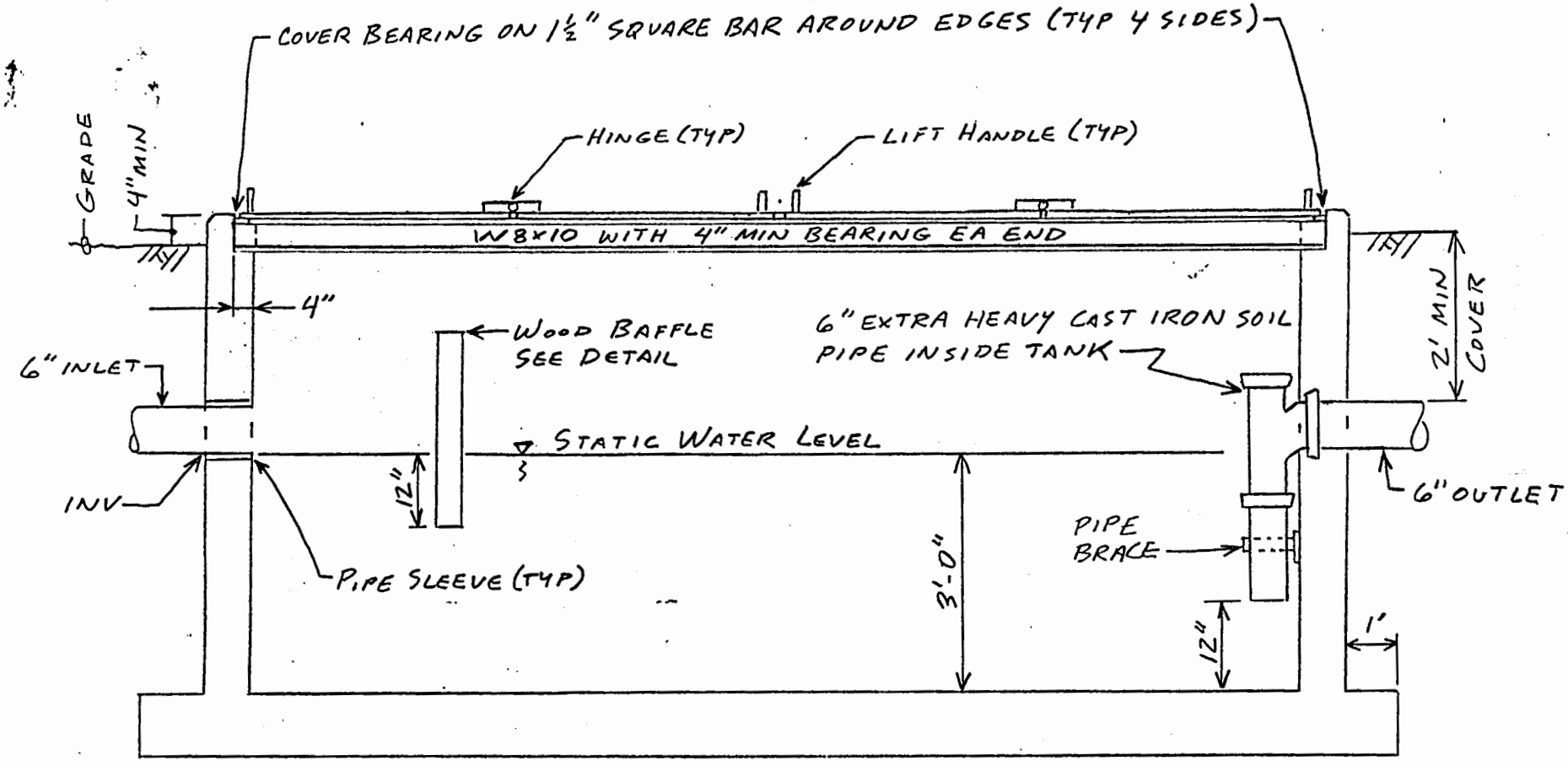

SECTION

OIL SEPARATOR DETAIL

NTS

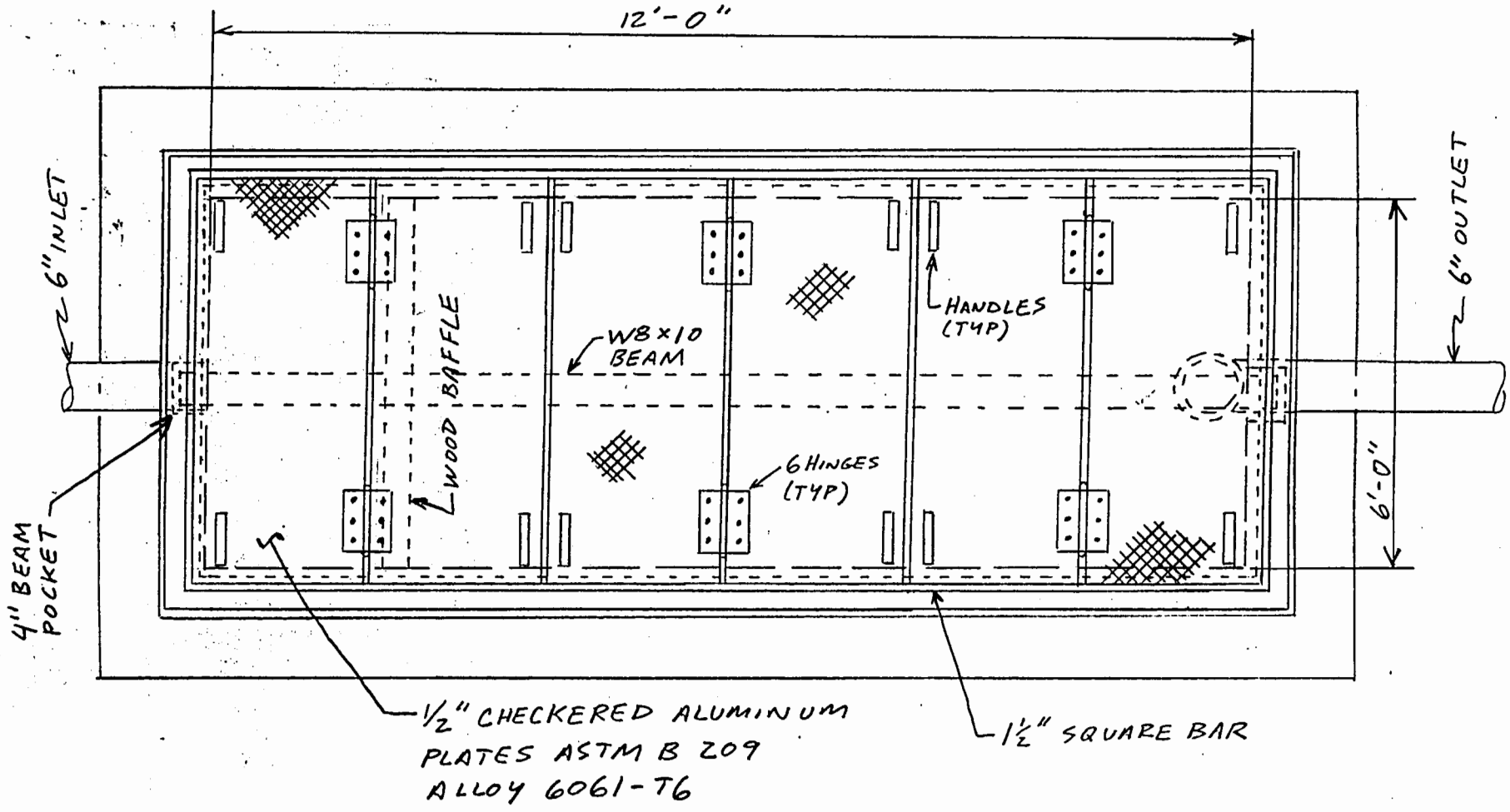

PLAN

NOTES:

1. TANK TO BE PRECAST CONCRETE.
2. MAX WT OF COVER SECTION 100 LBS.
3. SEPARATOR SIZED FOR FLOW FROM 2-3/4" HOSE BIBBS (ABOUT 40 GPM MAX.).

OIL SEPARATOR DETAIL

NTS

PROPOSED FOR PEDRICKTOWN, NJ-BLDG 506

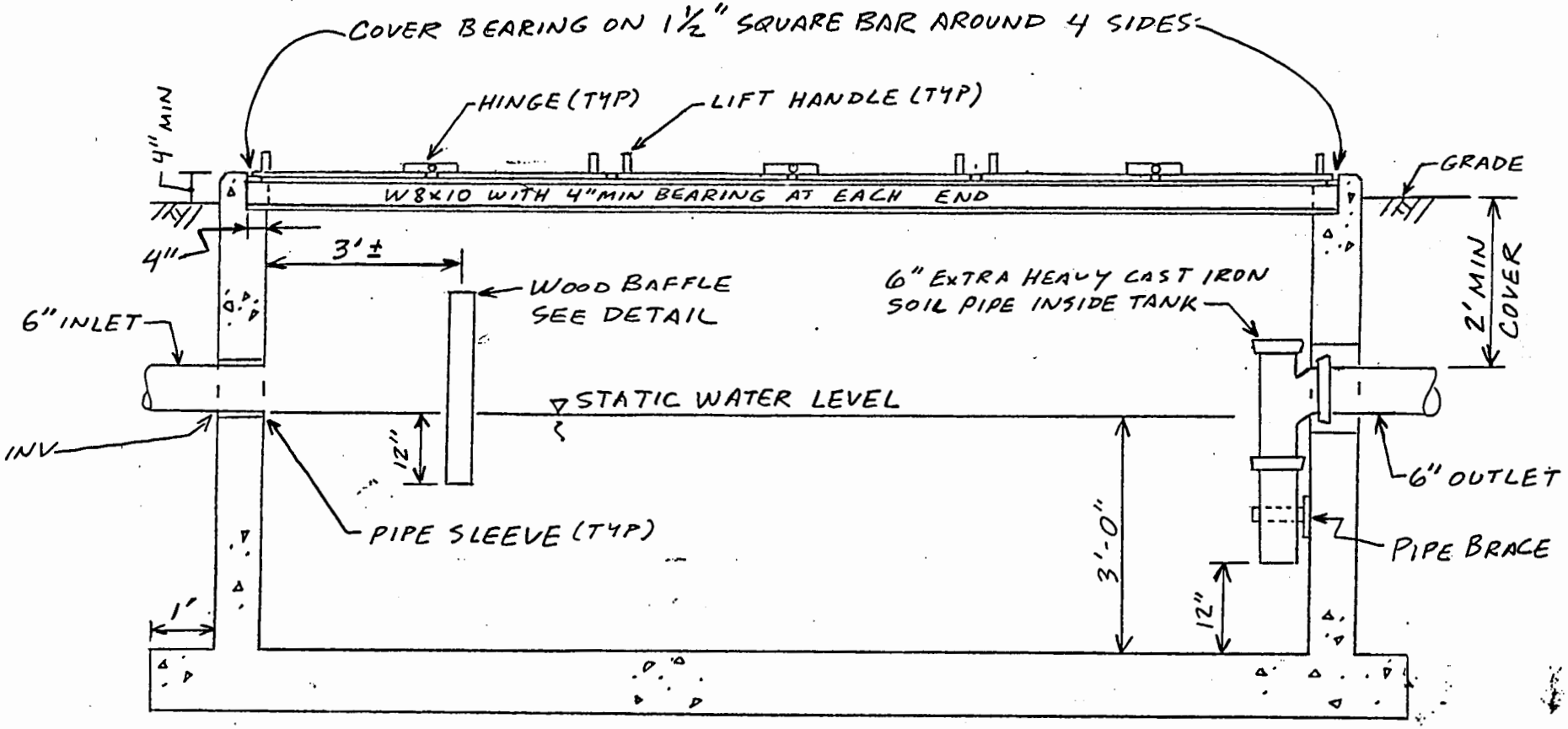

SECTION

OIL SEPARATOR DETAIL

NTS

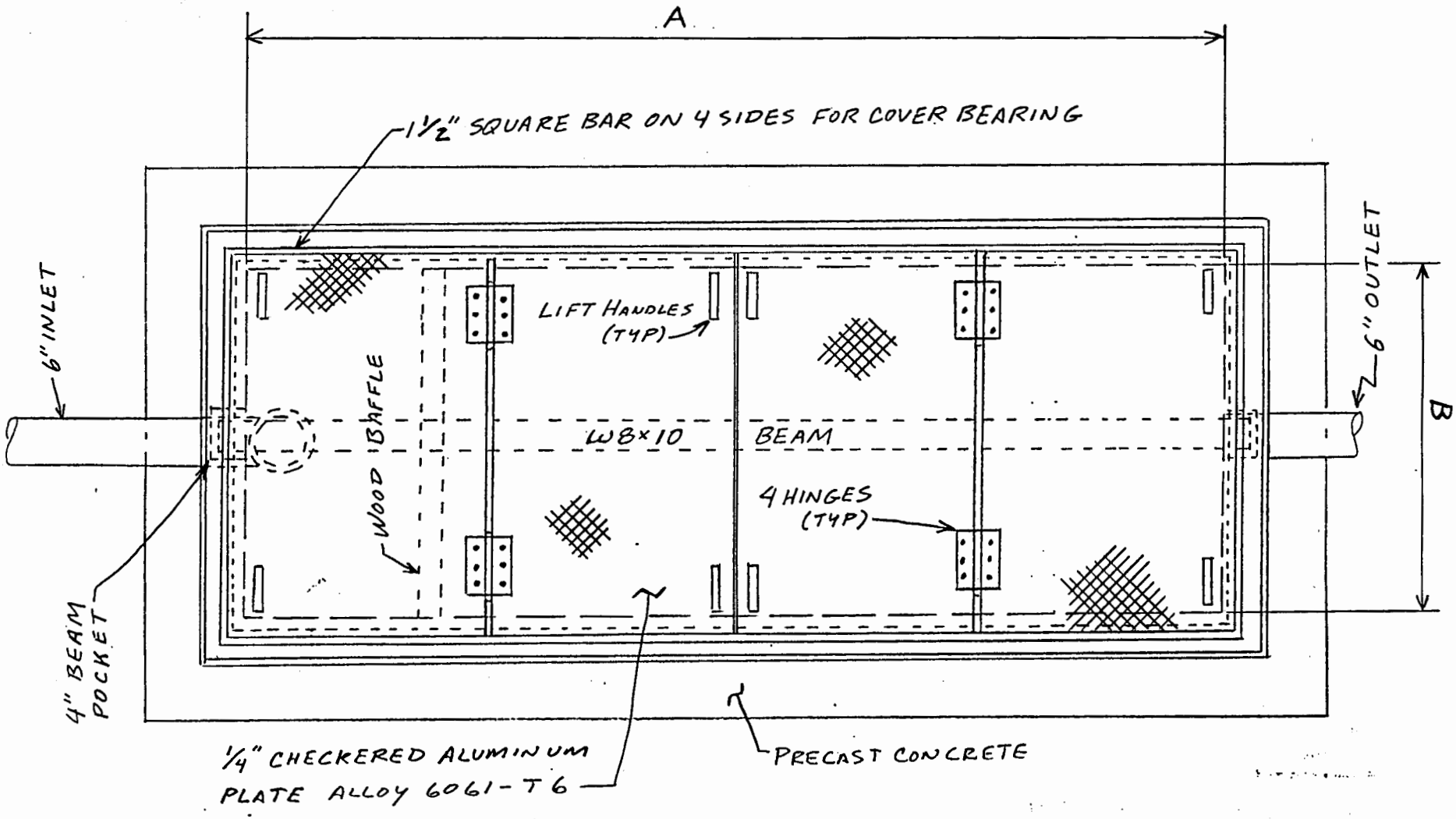

PLAN

GRIT TANK DETAIL

NTS

	A	B
GREENCASTLE WILKES-BARRE PEDRICKTOWN BLDG 404	6'	4'
PEDRICKTOWN BLDG 506	8'	5'

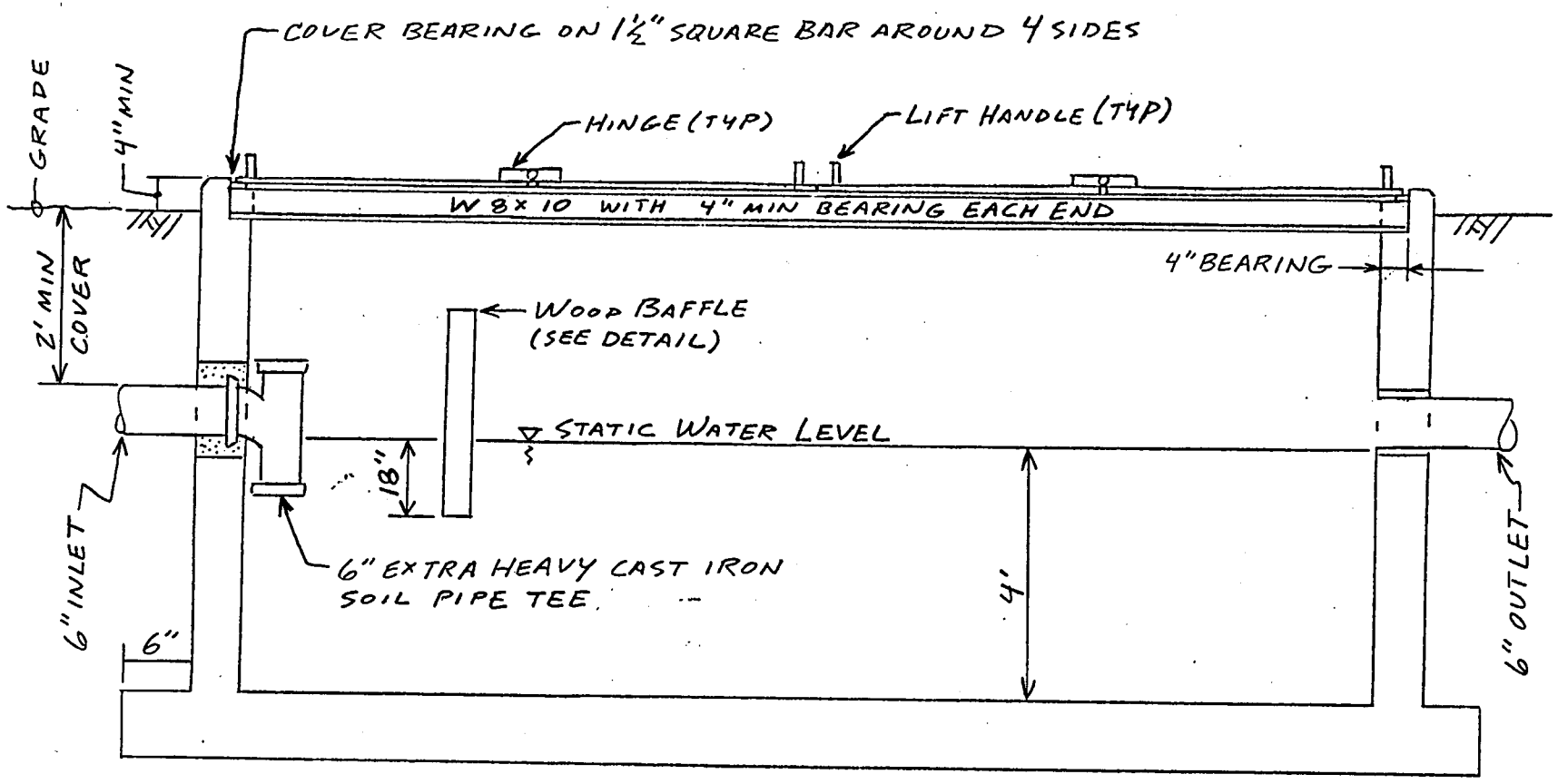

SECTION

GRIT TANK DETAIL.

NTS

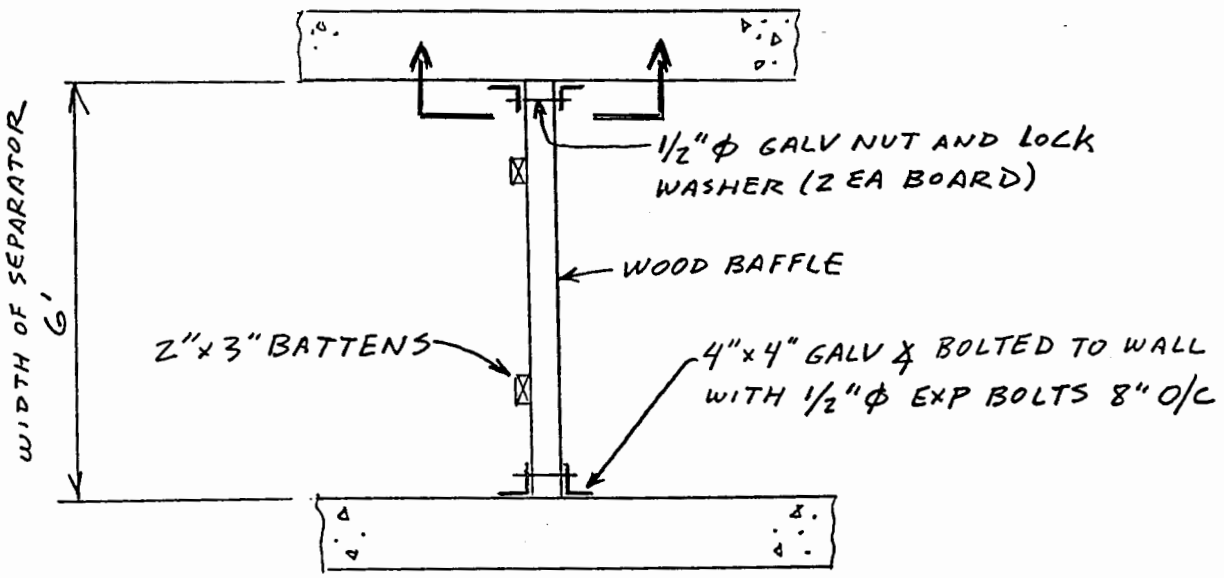

PLAN

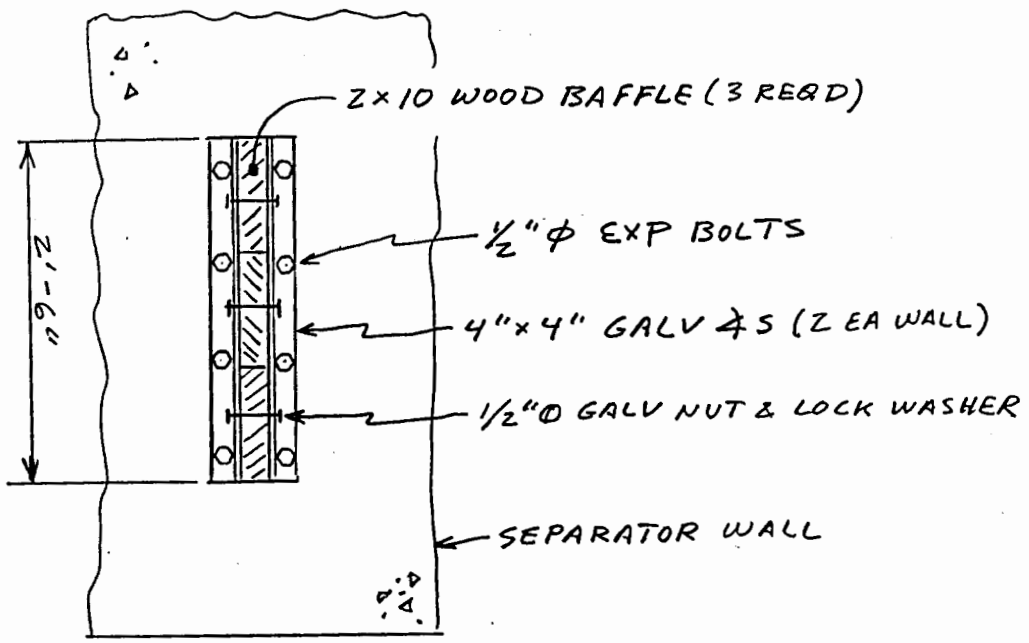

SECTION

WOOD BAFFLE DETAIL

NTS

APPENDIX B

Wash Pad Details

~~14-7/8" TOP W/BUCKET~~ ~~Series 34720~~

SERIES NO.	PIPE OUTLET SIZE	LIST PRICE: CAST IRON BODY WITH		
		C. I. Top	–1 S.F. Nikaloy Top	–2 S.F. Bronze Top
34720	3, 4	$462.40	$641.00	$625.60

FOR OPTIONS ADD		
–1	Satin Finish Nikaloy Top	ABOVE
–2	Satin Finish Bronze Top	ABOVE
–7	Ductile Iron Grate	$74.30
–17	Secured Grate, Vandal-Proof Screws	22.90
–49	3/4" Primer Tap	18.30
–50	1/2" Primer Tap	18.30
–66	No-Hub Side Outlet, 3", 4"	41.30
	5", 6"	92.[illegible]
–92	Galvanized Cast Iron Parts	[illegible]6.10
–X	Inside Caulk Outlet	N/C
–Z	No-Hub Spigot Outlet	N/C

FOR OUTLET TYPE, SPECIFY -Z or -X.

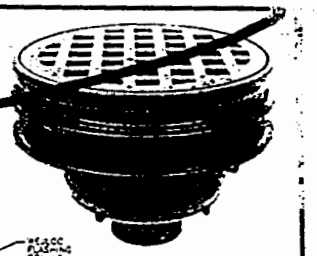

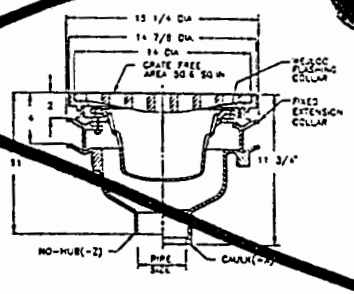

TYPE NO.	PIPE SIZE	E	F	LBS.
34723	3	10-1/4	12	110
34724	4	10-3/8	12-1/4	110
34725	5	10-1/2	12-1/2	110
34726	6	10-5/8	12-5/8	110

SPECIFICATION: JOSAM 34720 Series coated cast iron Floor Drain with two-piece body, double drainage flange, WEJLOC® non-puncturing flashing clamp collar, weepholes, bottom outlet, round top, loose-set extra heavy-duty grate and removable sediment bucket.

NON-CLOG 21-1/8" TOP W/BUCKET — Series 34920

SERIES NO.	PIPE OUTLET SIZE	LIST PRICE: CAST IRON BODY WITH		
		C. I. Top	–1 S.F. Nikaloy Top	–2 S.F. Bronze Top
34920	3, 4, 5 6, 8	$1,869.30	$2,109.60	$2,070.10

FOR OPTIONS ADD		
–1	Satin Finish Nikaloy Top	ABOVE
–2	Satin Finish Bronze Top	ABOVE
–12	Square Top, Cast Iron	P.O.A.
–12–1	Square Top, Nikaloy	P.O.A.
–12–2	Square Top, Bronze	P.O.A.
–17	Secured Grate, Vandal-Proof Screws	$22.90
–41	Flashing Clamp Device	N/C
–49	3/4" Primer Tap	18.30
–50	1/2" Primer Tap	18.30
–66	No-Hub Side Outlet, 3", 4"	41.30
	5", 6"	92.00
–80	Perforated Copper Basket	342.60
–92	Galvanized Cast Iron Parts	316.00
–T	Threaded Outlet	9.50
–X	Inside Caulk Outlet	N/C

FOR OUTLET TYPE, SPECIFY -X or -T.

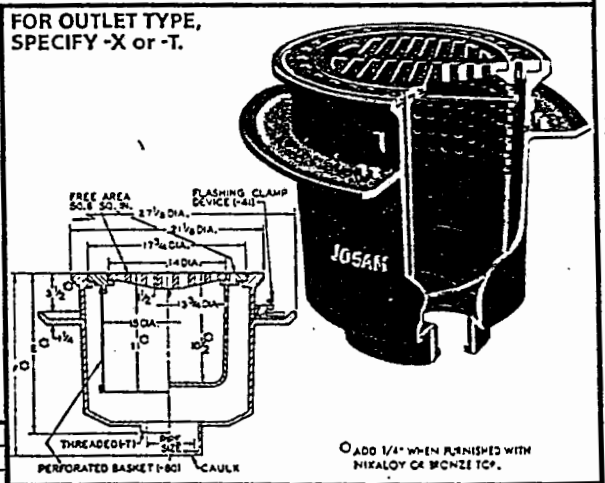

TYPE NO.	PIPE SIZE	E	F	LBS.
34923	3	14-3/4	16-7/8	253
34924	4	14-3/4	16-3/4	253
34925	5	15	16-7/8	253
34926	6	15	17-3/4	253
34928	8	15-1/4	17-3/4	253

SPECIFICATION: JOSAM 34920 Series coated cast iron Floor Drain with double drainage flange, weepholes, bottom outlet, round top and removable extra deep sediment bucket designed so that medium-duty NON-CLOG grate cannot be replaced unless bucket is in position.

~~9-1/8" TOP W/BUCKET~~ ~~Series 35130~~

SERIES NO.	PIPE OUTLET SIZE	LIST PRICE: CAST IRON BODY WITH		
		C. I. Top	–1 S.F. Nikaloy Top	–2 S.F. Bronze Top
35130	3, 4	$134.70	$262.60	$228.40

FOR OPTIONS ADD		
–1	Satin Finish Nikaloy Top	ABOVE
–2	Satin Finish Bronze Top	ABOVE
–17	Secured Grate, Vandal-Proof Screws	$17.20
–66	No-Hub Side Outlet, 3", 4"	41.30
–70	Less Bucket	DEDUCT 11.50
–92	Galvanized Cast Iron Parts	61.00
–X	Inside Caulk Outlet	N/C
–Z	No-Hub Spigot Outlet	N/C

FOR OUTLET TYPE, SPECIFY -Z or -X.

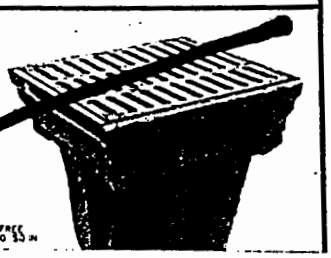

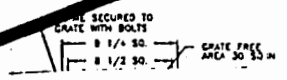

USARC WASH PADS

NON-CLOG DRAIN with SEDIMENT BUCKET

TYPE NO.	PIPE SIZE	LBS.
35133	3	47
35134	4	47

SPE
two
duty
serv

SHADING INDICATES CUSTOMER PREFERRED PRODUCT. Popular sizes and opti

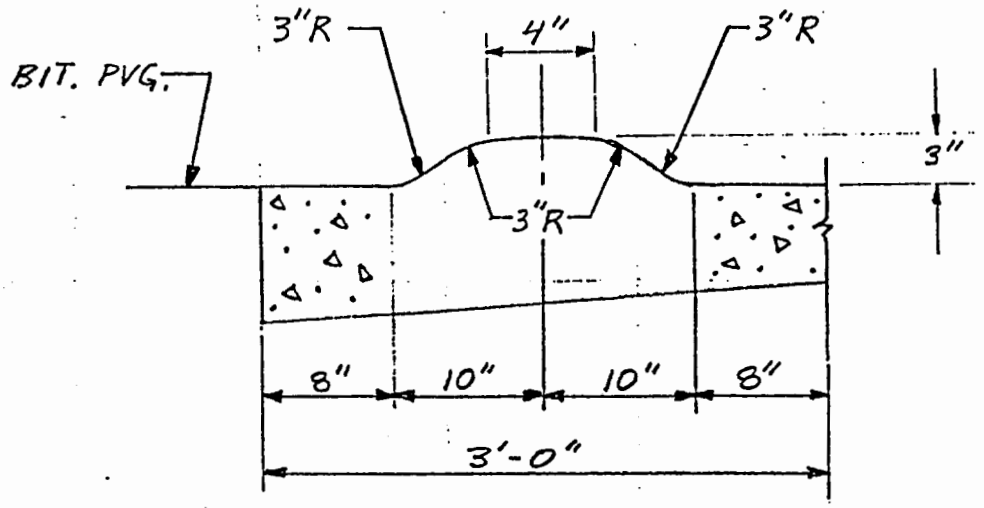

SECTION C-C: MOUNTABLE CURB DETAIL

NOT TO SCALE

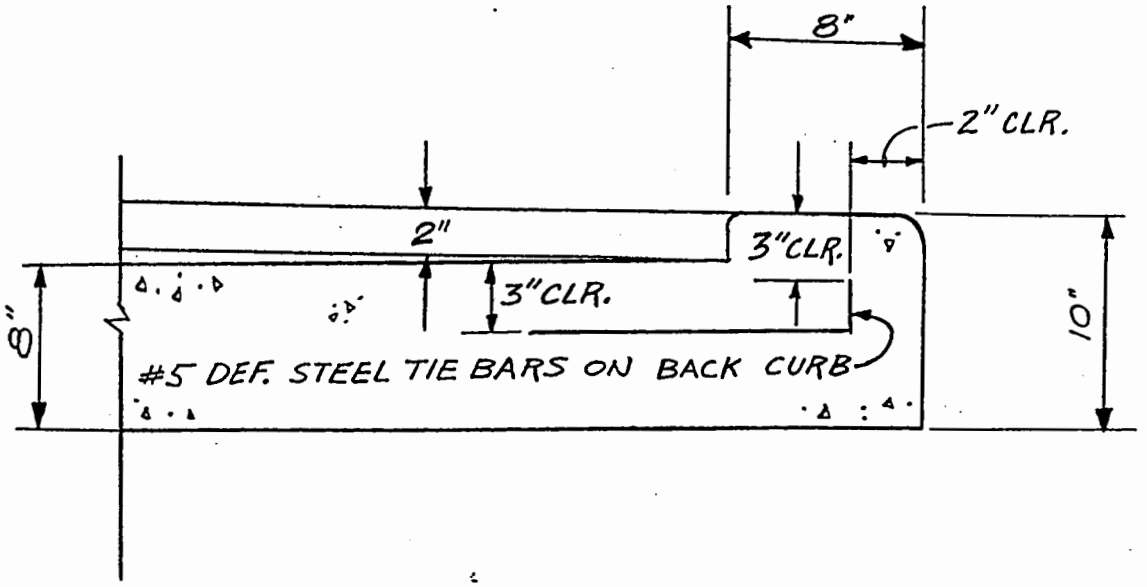

CURB DETAIL

N. T. S.

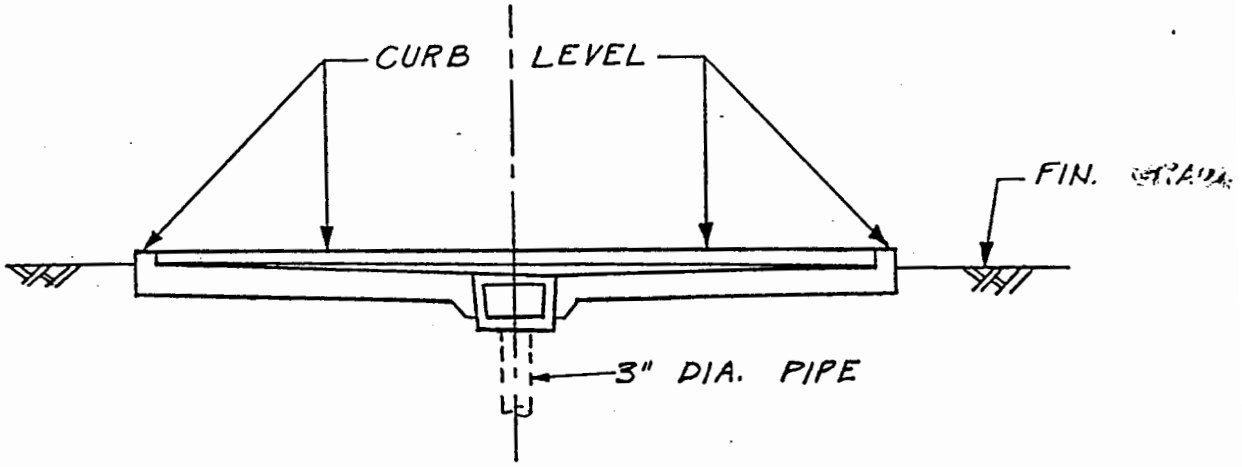

SECTION A - A

N. T. S.

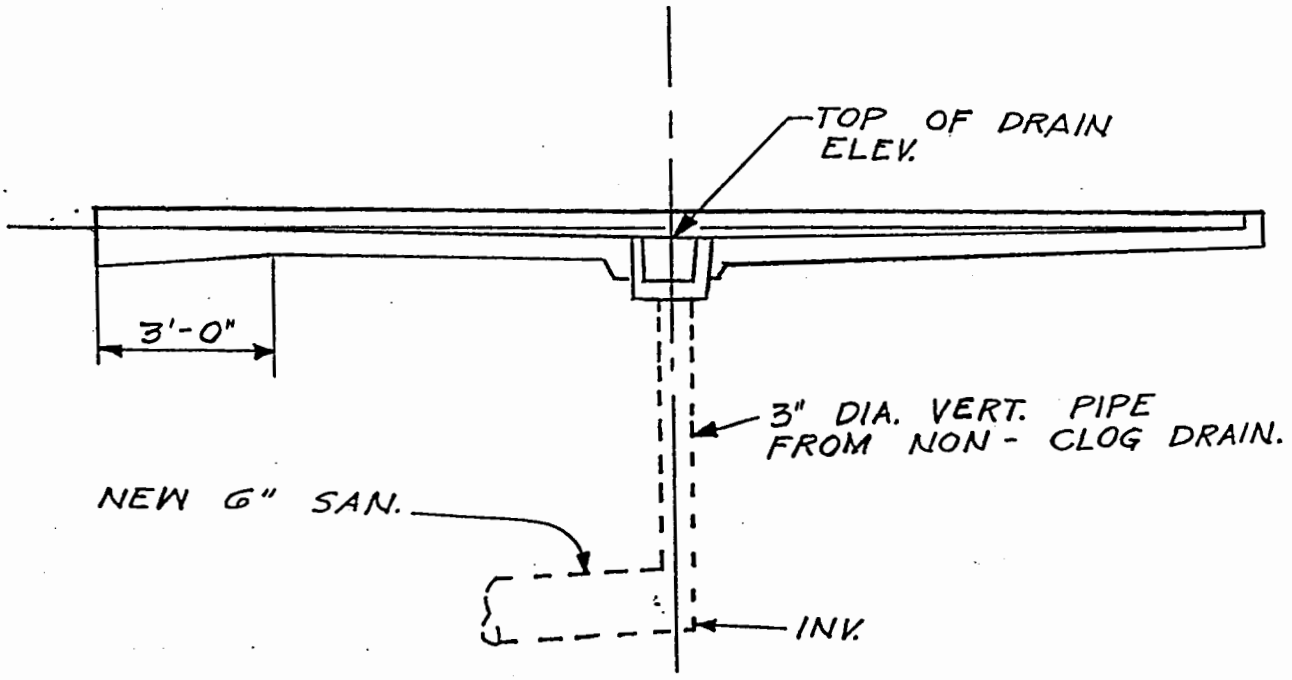

SECTION B - B

NTS

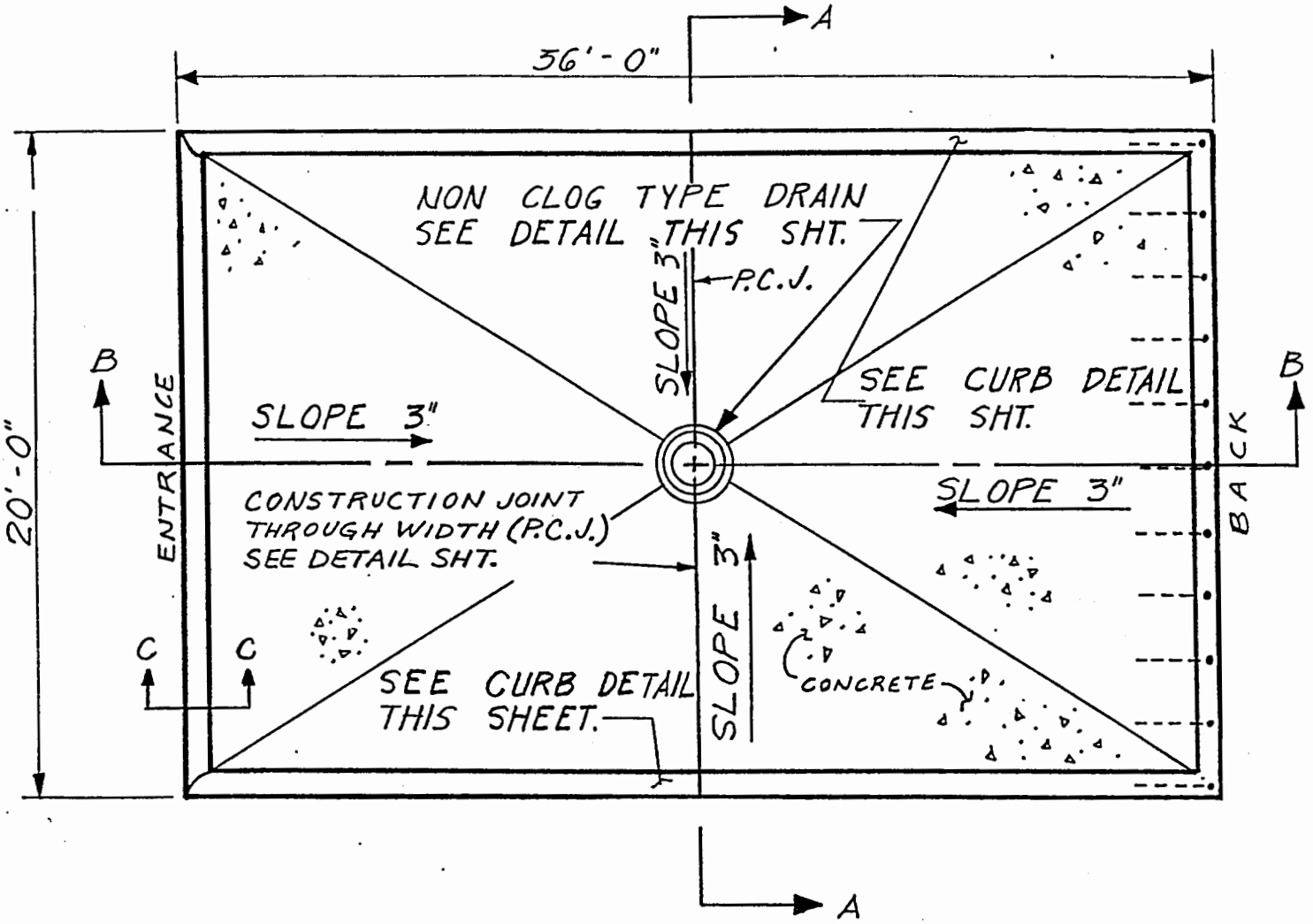

PLAN OF WASH PLATFORM

N. T. S.

APPENDIX C

Canopy Data

Pre-Engineered Types:

Steel Columns/Wood Deck

All Steel

All Aluminum

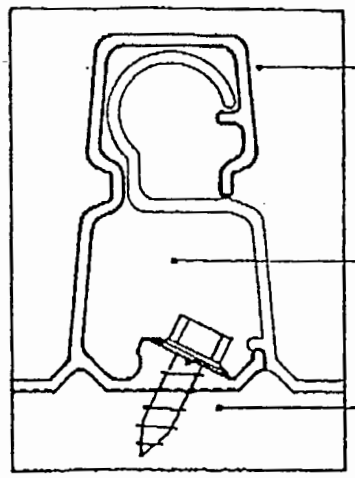

ENLARGED "LOCK" DETAIL

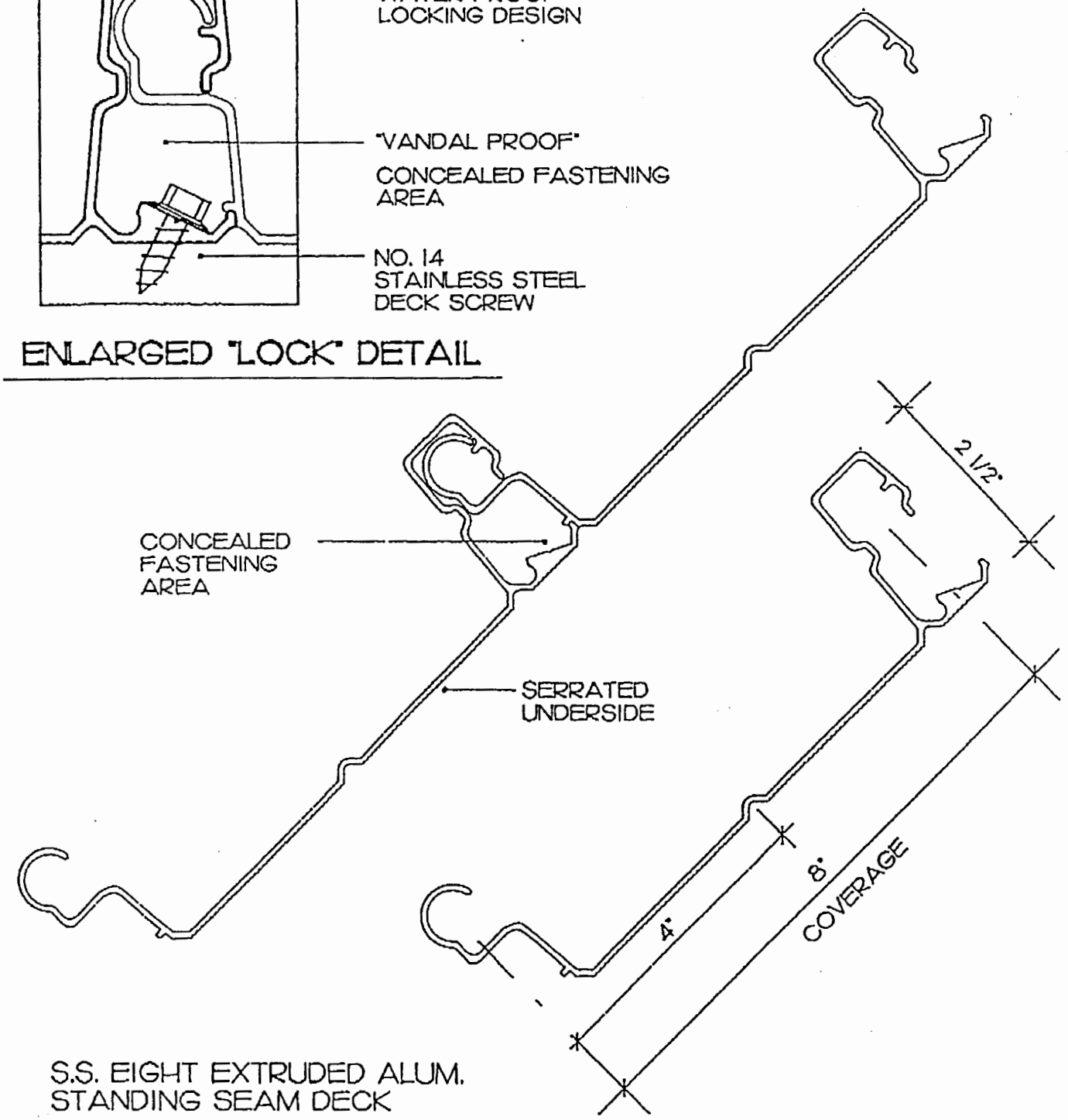

S.S. EIGHT EXTRUDED ALUM.
STANDING SEAM DECK

dittmer
ARCHITECTURAL ALUMINUM
1006 Shepard Road
Winter Springs, Florida 32708-2018
Ph: 407/699-1755 • Fax: 407/695-4430

S.S. EIGHT
EXTRUDED ALUM.
STANDING SEAM DECK

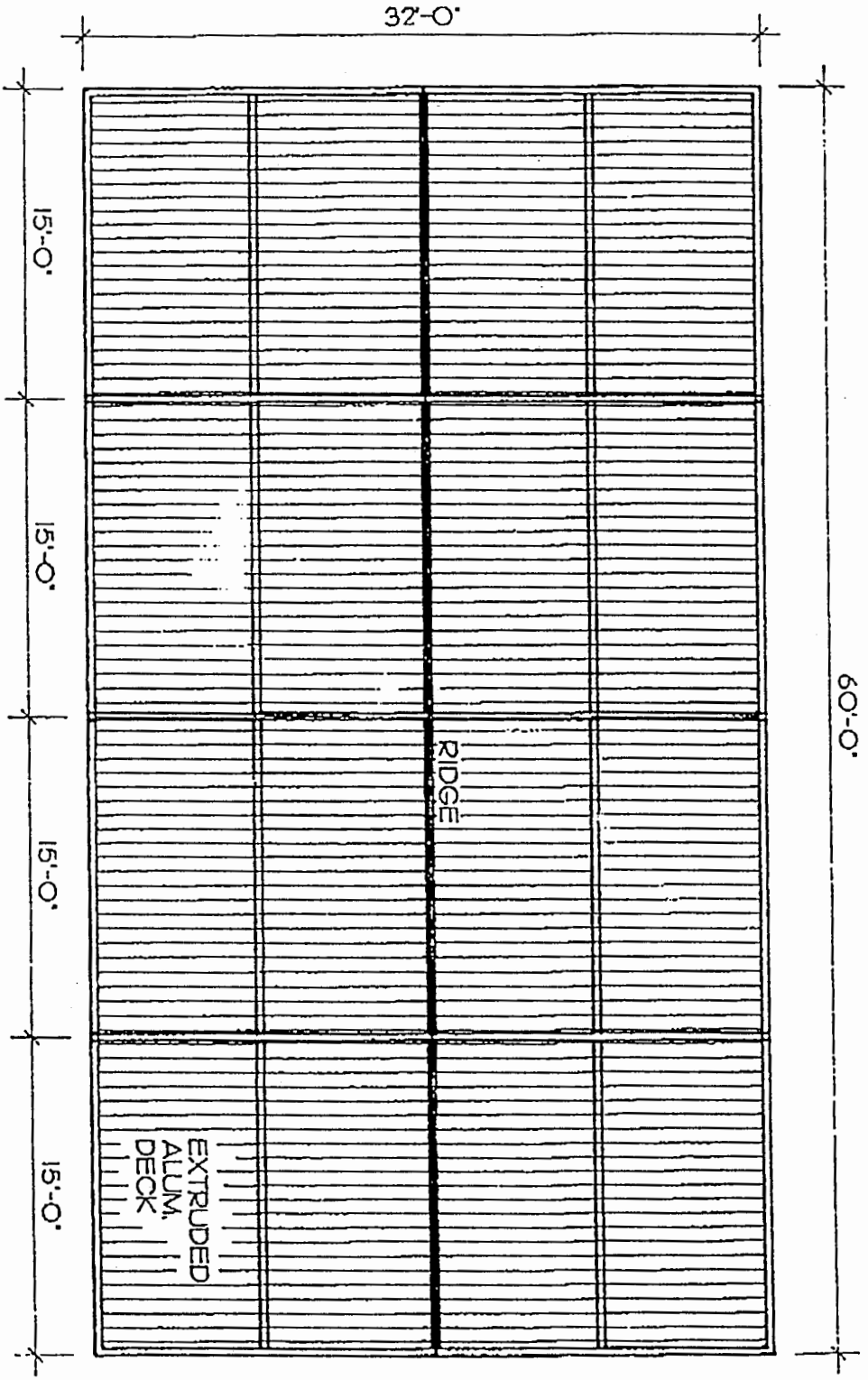

PLAN OF 32' X 60' CANOPY

dittmer
ARCHITECTURAL ALUMINUM
1005 Shepard Road
Winter Springs, Florida 32708-2018
Ph: 407/699-1755 - Fax: 407/695-4430

CANOPY DETAIL

JOE MAKLVAK

MAY 18-95
SHEET NO.
1
RELM37.DWG

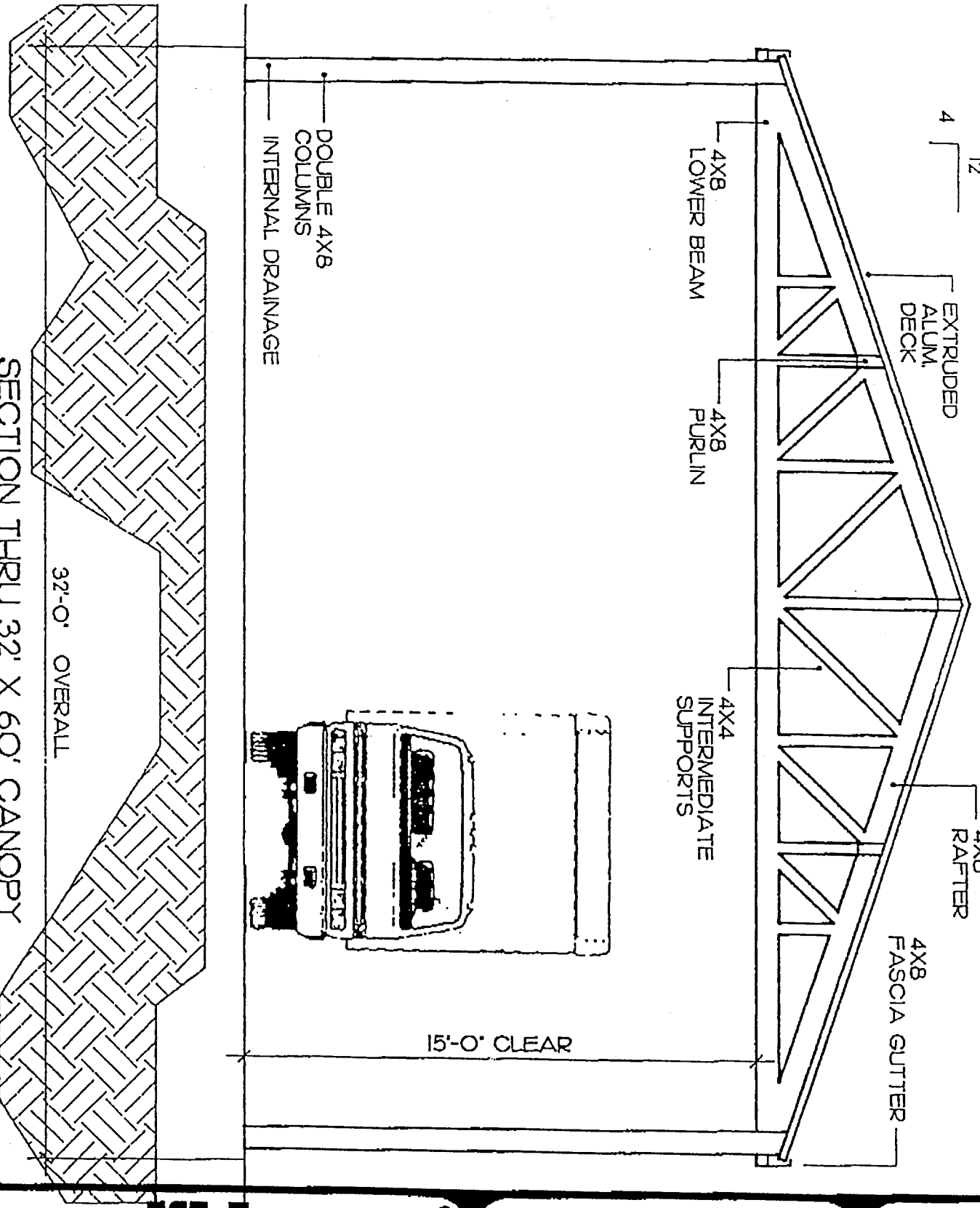

SECTION THRU 32' X 60' CANOPY

dittmer
ARCHITECTURAL ALUMINUM
1006 Shepard Road
Winter Springs, Florida 32708-2018
Ph: 407/699-1755 · Fax: 407/695-4430

CANOPY DETAIL

JOE MAKLVAK

MAY 18-95
SHEET NO.
2
RELM37.DWG

FAX DITT

DITTMER ARCHITECTURAL ALUMINUM FACSIMILE TRANSMITTAL

COVER SHEET

ALL ALUMINUM

DATE: MAY 18-95

TO: JOE MAKUVAK

OF: U.S ARMY CORP OF ENGINEERS

FAX #: 410-962-3680

SHEET: 1 OF 4

RE: ALUMINUM CANOPIES 3) 22' x 35'
1) 32' x 60'

MEMO: ENCLOSED PLEASE FIND SECTION & PLAN OF 32' x 60' CANOPY.

PLEASE BUDGET
FOR 22' x 35' @ 28,000 EA

32' x 60' @ 70,000 EA

INCLUDES COMPLETE CANOPY SYSTEM w/ CLEAR ANODIZE FINISH. "FURNISHED"

SENT BY: Dana Callan

PLEASE CALL THE NUMBER BELOW IF YOU DID NOT RECIEVE ALL OF THIS TRANSMISSION.

dittmer
ARCHITECTURAL ALUMINUM
1006 Shepard Road
Winter Springs, Florida 32708-2018
Ph: 407/699-1755 • Fax: 407/695-4430

DATE: MAY 18-95
COVER SHEET

DANA CALLAN

RCP Shelters, Inc.

custom projects are our specialty™

US COE
P.O. Box 1715
Baltimore, MD 21203-1715

Attn: Mr. Joe Miklusak
ph 410.962.6705 fax 410.962.3680

ALL STEEL

RCP Proposal for "All Steel" Wash Pad Covers

We are pleased to quote your delivered cost for the following (materials only):

QTY	MODEL DESCRIPTION	MATERIAL COST
1	36' x 60' "All Steel" Shelter	$24,470
3	26' x 36' "All Steel" Shelters	$32,270
4	1 @ 36x60 & 3 @ 26x36	$56,740

1. INCLUDES: shop drawings, steel columns, steel beams, metal roofing, and required connections.
2. Not Included: unloading, installation, concrete, design of concrete, concrete embedments.
3. Terms: 1% 10, net 30 days.
4. Prices valid 60 days. Please allow 3 weeks for delivery a/r/o & approved drawings.

- **Accepted By** _____ **Title** _____ **Size** _____ **Contract Amount $** _____
- Mail Drawings for [ ] Approval or [ ] Waiver of Approval To: _____
- Ship to Address (attach directions w/order): _____

For prompt response please FAX 407.288.0207 with all orders, bids & inquiries. We look forward to being of service.

Sincerely,
RCP Shelters, Inc.,

John Ritter

John Ritter

RCP Shelters, Inc.

When the best is *barely* good enough - Insist on RCP!

send all orders, bids & inquiries to:
RCP Shelters, Inc.
P.O. Box 45
Stuart, FL 34995-0045
Phone 407.288.3600
Fax 407.288.0207

SPECIAL INSTRUCTIONS (Please Detail):

DATE: 05/18/95

RCP is a small business that appreciates *your* business.

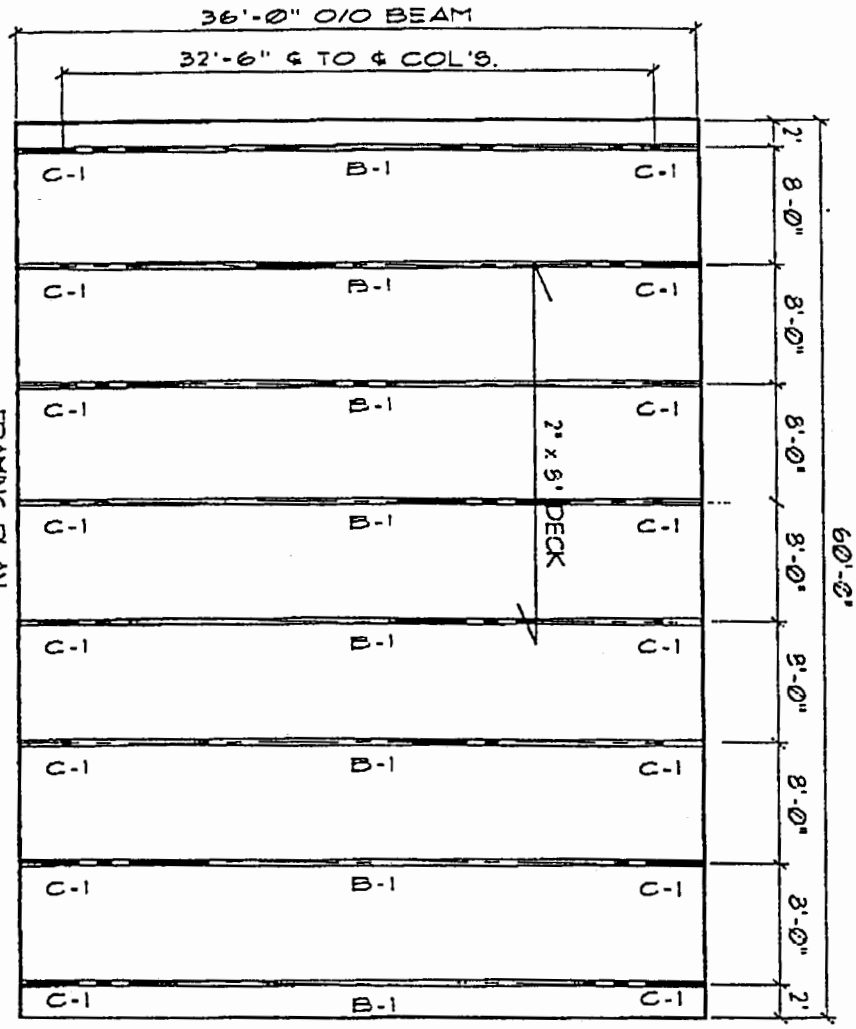

FRAMING PLAN

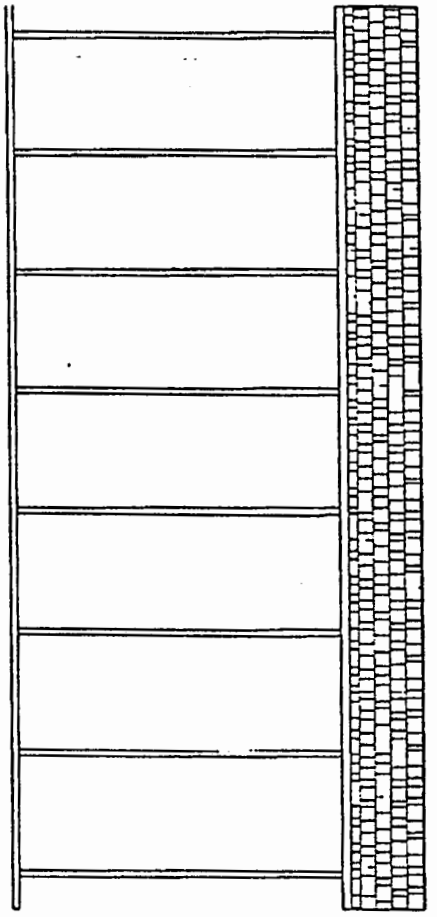

SIDE ELEVATION

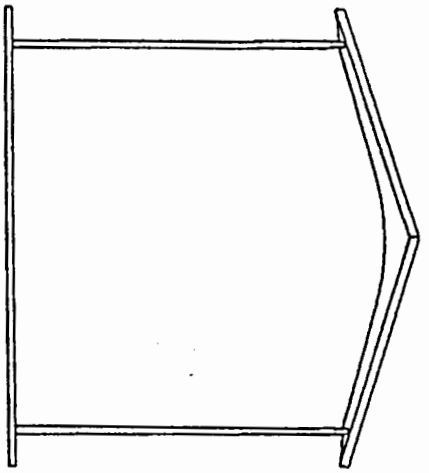

END ELEVATION

THIS PRINT IS THE PROPERTY OF RCP SHELTERS AND IS NOT TO BE USED, COPIED, OR REPRODUCED WITHOUT THEIR EXPRESSED WRITTEN PERMISSION.

36' x 60' "PALM BEACH" PAVILION

WASH PAD - U.S. ARMY C.O.E.

DRAWN JR	DATE 5-5-95	PROJECT NO. OT	SHEET NO.
CHK'D	DATE	CAD FILE NO. SM/PB/3660	1 of 1

R.C.P. SHELTERS
937 S.E. Central Parkway
Stuart, Florida 34994
Phone: (407) 288-3600
FAX: (407) 288-0207

RCP

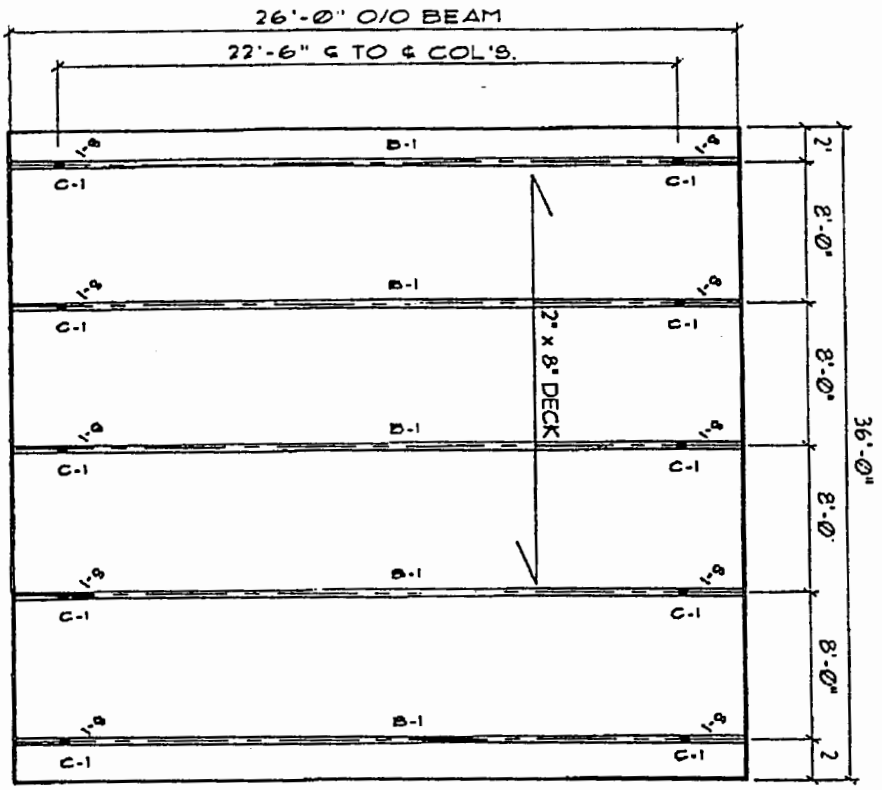

FRAMING PLAN

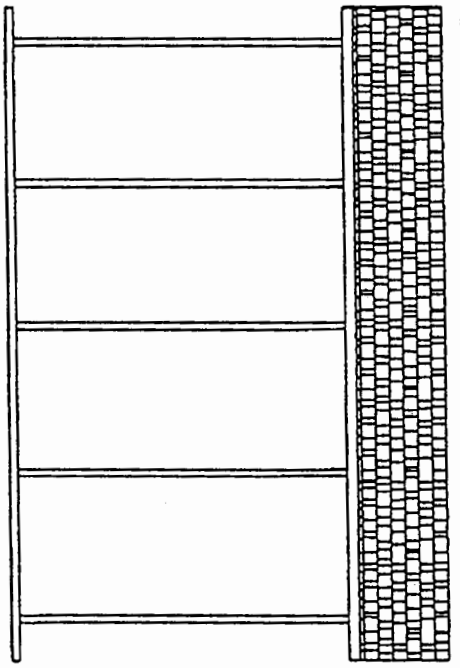

SIDE ELEVATION

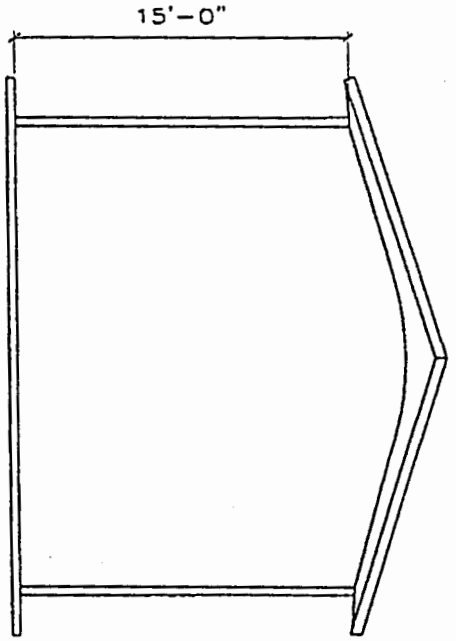

END ELEVATION

THIS PRINT IS THE PROPERTY OF RCP SHELTERS AND IS NOT TO BE USED, COPIED, OR REPRODUCED WITHOUT THEIR EXPRESSED WRITTEN PERMISSION.

26' x 36' "PALM BEACH" PAVILION

WASH PAD - U.S. ARMY C.O.E.

DRAWN JR	DATE 5-5-95	PROJECT NO. QT	SHEET NO.
CK'D	DATE	CAD FILE NO. BM/PB/2636	1 of 1

R.C.P. SHELTERS
937 S.E. Central Parkway
Stuart, Florida 34994
Phone: (407) 288-3600
FAX: (407) 288-0207

RCP

TECHNICAL SPECIFICATIONS
"PALM BEACH" RECTANGULAR PAVILION
U.S. ARMY CORPS of ENGINEERS

DESIGN CRITERIA: Structure(s) designed as a free standing, open air pavilion(s) and will meet all applicable building codes, as manufactured by RCP Shelters, Inc., P.O. Box 45, Stuart, FL 34995-0045, TOLL FREE (800) 525-0207, PH (407) 288-3600 or FAX (407) 288-0207.

SCOPE: (3) 26' x 36' & (1) 36' x 60' glue laminated wood picnic shelter over a 4" minimum thickness concrete slab with wire woven mesh. Concrete slab, concrete design, electrical (if required), and erection by others. Shelters to have a 15' minimum clearance. All required fascia, decking, beams, waterproofing (Optional) and columns delivered FOB accessible job site, unloading by others.

WATERPROOFING (Optional - may be furnished by owner): Will consist of 30 year warranty, dimensional fiberglass, class "A" fire rated shingle over 15# asphalt felt underlayment. Color Desert Tan or as selected by owner. Roofing nails to be 1 1/4" galvanized. Drip edge applied continuously along perimeter.

FASCIA: Fascia shall be 2" x 6", SYP, *#1 grade*, pressure treated CCA 0.4, kiln dried, and surfaced on four sides. Fascia to be free of any grooves or incisions.

ROOF DECKING: Roof deck shall be 2" x 8", *#1 grade*, SYP, tongue and groove, edge veed one side, kiln dried and furnished in specified lengths so all joints occur over beams. Random length, end matched deck and/or #2 grade deck is unacceptable and will be rejected.

BEAMS: Beams will be glued laminated southern pine minimum 5" widths, APA/EWS certified members in accordance with ANSI A-190.1 standard, factory sealed and individually wrapped for protection. Glue shall be waterproof "resorcinol". Roof pitch to be 3:12.

COLUMNS: Columns shall be minimum 5" x 5" x 3/16" x 15' structural steel tube with base plate and side plates. Ends shall be capped. All steel to be prime painted after fabrication. Finish painting in field by owner or GC. All connections and hardware to be included.

SHOP DRAWINGS: Within 7 days after receipt of order manufacturer to furnish complete, Florida stamped and certified, shop drawings showing details and design criteria.

RCP Shelters, Inc.
PROPOSAL

STEEL COLUMNS
WOOD ROOF DECK

May 4, 1995

US Army Corps of Engineers
P.O. Box 1715
Baltimore, MD 21203-1715

Attn: Joe Miklusak -
Phone (410) 962-6705 Fax (410) 962-3680

Covers for Wash Pads

QTY	DESCRIPTION	PRICE	SHINGLE PACKAGE
1	36' x 60' "Palm Beach" Pavilion	$ 15,800	$ 980
3	26' x 36' "Palm Beach" Pavilions	$ 20,950	$ 1,340

Base price includes 15' long steel columns, laminated wood beams, #1 grade 2" x 8" Tongue & Groove roof deck, #1 grade treated fascia, all connection hardware, and standard shop drawings.

Add $ 375 for NJ or PA certified shop drawings.
Gutters & downspouts are not included.
Price is for materials only & based on all shelters ordered & shipped together.
FOB jobsite, unloading by others. No taxes of any kind are included.
Allow 4-6 weeks for delivery, after approved shop drawings. Prices valid for 30 days.
Terms: 1% 10 days, net 30 days.

Please call if you have any questions, or need additional information.

Exclusive Features of all RCP Shelters

- #1 grade roof decking is always furnished (more attractive, easier to install).
- Decking is furnished in specified lengths so all joints occur over beams.
- No place for birds or animals to roost.
- All structural members are pre-cut and pre-drilled for ease of installation.
- Fascia and wood columns are always #1 grade.
- All RCP shelters are designed by professional engineers and come with detailed shop drawings.
- RCP ships all material via dedicated flatbed truck (ease of unloading, faster delivery, never handled multiple times - arrives undamaged).

Sincerely,

Bob Ritter

rcp shelters, inc.

Please Send All Orders, Bids & Inquiries To:
p.o. box 45, stuart, fl 34995-0045
inquiries 800-525-0207 ph 407-288-3600
fax 407-288-0207

APPENDIX D

Recycle System

THE ULTRASORB® SYSTEM

Model SM

OPERATIONS MANUAL

RGF Environmental Systems, Inc.
3875 Fiscal Court, West Palm Beach, Florida 33404
(407)-848-1826 • FAX (407)-848-9454

ULTRASORB® System
Model SM

TABLE OF CONTENTS

Section 1
The ULTRASORB® System
- *Shipment Inspection* — *Page 1*
- *Pre-Installation Checklist* — *Page 1*
- *Familiarization* — *Page 2*

Section 2
Installation
- *Installation Requirements* — *Page 3*
- *Installation Procedure for the ULTRASORB® System* — *Page 3*

Section 3
How the ULTRASORB® System Works
- *Flow Diagram* — *Page 8*
- *Terminology* — *Page 9*
- *General Theory* — *Page 10*

Section 4
ULTRASORB® System Startup
- *Startup Procedure* — *Page 12*
- *Safety Precautions* — *Page 14*
- *Operational Notes* — *Page 14*

Section 5
Preventative Maintenance Schedule
- *Daily Maintenance* — *Page 17*
- *Weekly Maintenance* — *Page 19*
- *As Required Maintenance* — *Page 21*

Section 6
Controlling Water Quality
- *pH/Alkalinity* — *Page 22*
- *Oxidants* — *Page 23*
- *Soaps* — *Page 24*
- *Water Conditioners* — *Page 24*

Section 7
Trouble Shooting — *Page 25*

Section 8
Replacement Parts — *Page 30*

Section 9
Engineering Diagrams — *Page 31*

Section 10
Individual Component Manufacturer's Manuals — *Page 38*

Section 11
Warranty/Return Forms
- *Limited Warranty*
- *Limited Warranty Policy*
- *Warranty Request Form*
- *Warranty Validation Form*
- *Installation/Start-Up Record*
- *Installation/Start-Up Checklist*
- *Client Questionnaire*

ULTRASORB® System
Model SM
Operations Manual

Section 1
The ULTRASORB® System

Shipment Inspection

Immediately upon receipt of the *RGF* **ULTRASORB® System Model SM**, you are responsible as the purchaser to take the shipping containers off the truck and inspect the equipment, storage tanks, and parts for damage.

IF ANY VISIBLE DAMAGE TO THE EQUIPMENT IS EVIDENT:

- Notify the driver for the courier company immediately and write on the Bill of Lading what is damaged or missing.

- Call *RGF* immediately at **1-407-848-1826** or **FAX 1-407-848-9454** a copy of the Bill of Lading with damage or missing items to *RGF*.

It is important to note that all of the pump and valve fittings are connected with threaded unions and are left disconnected in order to relieve stress on the piping components during shipment. Also, note that O-Rings for the threaded unions are attached near the appropriate pipe fittings and should also be checked for completeness, but should remain attached, as is, until that particular fitting is assembled.

Pre-Installation Checklist

Remove the *RGF* **PACKING SLIP** and the **BILL OF LADING** and verify for condition and completeness of all the parts and components found on the pallets and skids. Remove the **LOOSE PARTS CHECKLIST** from inside of the **LOOSE PARTS BOX** and verify for condition and completeness of all the parts and components found within the box. If any of the items are missing, please contact your distributor immediately or *RGF* **Environmental Systems at 1-407-848-1826 or FAX 1-407-848-9454.**

Familiarization

The following diagram is a general component layout of the ULTRASORB® System with each major component labeled. It should be studied thoroughly to understand the names and locations of each component for assembly and startup of the unit. Use the Terminology section located in Section 3 following the flow diagram to help identify and clarify the locations of the components.

FLOW RATE: 16 gpm

ULTRASORB® System Model SM

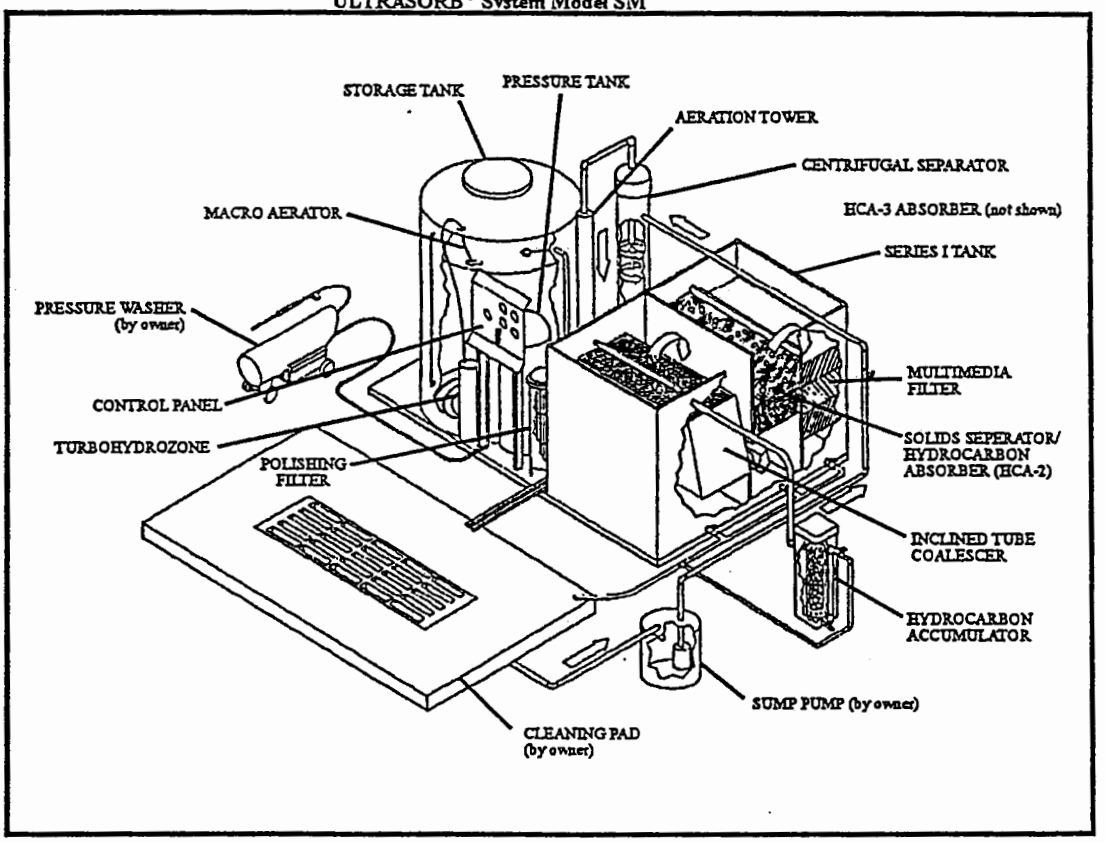

Section 2
Installation

Installation Requirements

The ULTRASORB® System must be installed in strict compliance with these procedures in order for the warranty to be activated. *RGF* will provided a sample of engineering plans of a standard concrete cleaning pad with the rebar, drain sumps, piping and electric details and requirements. This cleaning pad should be constructed and approved prior to installation of the ULTRASORB® System. The purchaser is responsible for bringing the required utilities (i.e. water, electricity, and drainage) to the system and connecting them according to local codes. If the System must be modified by *RGF* or the distributor in order to meet the requirements of local codes, the purchaser will be required to pay the modification costs. When the purchaser has completed all of the above, a field representative will be furnished by the *RGF* Distributor. He will provide four hours of installation check-out, testing, and training at no charge.

Installation Procedure for the ULTRASORB® System

PLEASE READ THE INSTALLATION PROCEDURE COMPLETELY AND THOROUGHLY BEFORE INSTALLING AND OPERATING THE UNIT.

1) Equipment Placement

After unpacking all of the loose components within the system, place it on the concrete pad location and level within $^1/_4$" all around. Also, make sure the Series I Tank is level within $^1/_4$" all around on the Skid.

2) Sump Pump Inlet

The Inlet from the sump is connected next to the $1^1/_2$" connection on the back of the skid marked INLET.

NOTE

MAKE SURE TO USE TEFLON TAPE ON ALL THREADED CONNECTIONS AND PVC GLUE ALL SLIP CONNECTIONS.

3) Make-Up Water

Connect the city water pipe from the concrete pad to the $^3/_4$" FRESH WATER INLET connection on the back of the skid.

NOTE

MOST LOCAL CODES REQUIRE THE USE OF A BACK FLOW PREVENTER AT THIS LOCATION. CHECK WITH LOCAL AUTHORITIES FOR THE SPECIFIC REQUIREMENT.

4) Peristaltic Chemical Injection Pump

A. Install the necessary pump tubing and chemical transfer hose in accordance with the **Uni-Dose® Peristaltic Pump Installation** manual. The chemicals should be added prior to entering the **ULTRASORB®** system (such as the main sump pit or the Aeration Tower). 50 ft. of polyethylene hose is supplied for chemical suction and discharge tubing.

B. Power for the pump is not supplied on the skid and should be provided from a local 110V GFI source.

C. The chemical container should be located as close to the equipment skid as possible. It is recommended to use a chemical container no larger than 5 gallons in order to prevent accidental over injection.

5) Coalescing Centrifugal Separator

Assemble the $1^1/_2$" **SEPARATOR TO AERATION TOWER CROSSOVER PIPE** by gluing the female slip and the Separator couple together and making sure the Aeration Tower connection has a sufficient airspace around it.

DO NOT GLUE THE AERATION TOWER CONNECTION.

6) Hydrocarbon Accumulator

Assemble the Hydrocarbon Accumulator and stand by the following procedure (see the following caption for details).

A. Assemble the **ACCUMULATOR STAND** by forming a "+" with the two 9" x 16" cross pieces with the flat sides up and placing the 16" square stand top on top of them. Use the 9 S.S. #6 x 5/8" Pan Phillips Screws and fasten the stand top to the cross pieces. Level it near the Oil Skimmer Outlet of the equipment skid.

B. Place the **HYDROCARBON ACCUMULATOR** on the stand.

C. Assemble the $1^1/_2$" **INLET PIPE ASSEMBLY** attaching it to the Oil Skimmer Outlet on the Series I Tank and the Inlet on the Hydrocarbon Accumulator.

D. Attach the **OIL ACCUMULATOR PIPE** to the inlet connection on the inside of the tank being sure the **INNER CHAMBER** is positioned so the pipe will pass through the side of the inner chamber.

E. Attach the $1^1/_2$" **OUTLET PIPE ASSEMBLY** to the Oil Accumulator Outlet. Plumb the Outlet Pipe Assembly from the "T" back to the main drain return line.

F. Attach the $1^1/_2$" **SLIP BALL VALVE** with the $1^1/_2$" Dia. x 3" L to the $1^1/_2$" threaded **DRAIN CONNECTION** on the side of the Accumulator. Plumb the Drain Connection of the Accumulator back to the main drain return line.

Hydrocarbon Accumulator Assembly

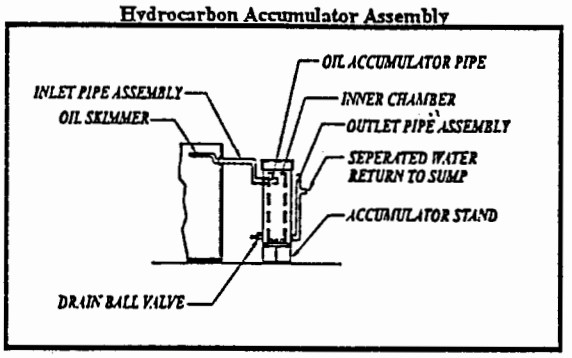

7) Storage Tank

The **STORAGE TANK PIPE ASSEMBLY** is attached to the Overflow Outlet of the Storage Tank and then lead to the local sewer drainage.

NOTE

CHECK WITH THE LOCAL AUTHORITIES TO BE SURE THEY WILL ACCEPT THE OVERFLOW.

8) Slip Ball Valves

Attach the remaining Slip Ball Valves as follows:

A. Use three $1^1/_2$" **SLIP BALL VALVES** with $1^1/_2$" Dia. x 3" L threaded pipe to connect to the $1^1/_2$" threaded **DRAIN CONNECTIONS** on the **SERIES I TANK.**

B. The last $1^1/_2$" **SLIP BALL VALVE** with $1^1/_2$" Dia. x 3" L threaded pipe connects to the threaded **DRAIN CONNECTION** on the **STORAGE TANK.**

C. The $^3/_4$" Slip Ball Valve with $^3/_4$" Dia. x 3" L threaded pipe with hose adapter attaches to the backflush connection on the **SERIES I TANK.**

D. The $^3/_4$" Slip Ball Valve with $^3/_4$" Dia. x 3" L threaded pipe attaches to the $^3/_4$" threaded connection on the **STORAGE TANK** located on the back side of the skid by the Fresh Water Inlet.

9) Return Lines

Plumb all of the drain connections from the skid and direct them back to the main return line. This main return line should be directed back to the main sump. The 30' of 1/4" clear braided hose is used to direct the effluent from bleed valve on the top of the HCA-3 Filter, back to the cleaning pad or main return line.

The Drain Return Connections that must be plumbed are:

Location	Connection
Series I Tank	3 - each 1-1/2" slip ball valve drain connections 1 - each 1-1/2" slip connection from overflow
Hydrocarbon Accumulator	1 - each 1-1/2" slip ball valve drain connection 1 - each 1-1/2" slip connection for water return
Polishing Filter	2 - each 3/4" slip ball valve drain connections
Centrifugal Separator	1 - each 1-1/2" slip connection for drain
Hydrocarbon Absorber (HCA-3)	1 - each 3/4" slip ball valve drain connection
Storage Tank	1 - each 1-1/2" slip ball valve cleanout conc. 1 - each 3/4" slip ball valve bleed back conc.

10) Multimedia Filter Bed

Inside of the **SERIES I TANK** place a sheet of the **POLY MESH** on top of the media deck inside of the third compartment. Next, place half of the bag (approx. 4") of **VOLCANSORB (ROCK)** spread out evenly on top of the layer of Mesh. Then, place another sheet of **MESH** on top of the Volcansorb followed by one full bag (approx. 8") of **CARBON (BLACK SMALL ROCKS)** spread out evenly on top . This is again followed by another sheet of **MESH** and by one full of the bag (approx. 4") of **ION EXCHANGE MEDIA (WHITE PELLETS)**. Finally, one last sheet of **MESH** is followed by the other half of the bag (approx. 4") of **VOLCANSORB**. See the caption below for more details.

Multimedia Filter Bed Layers

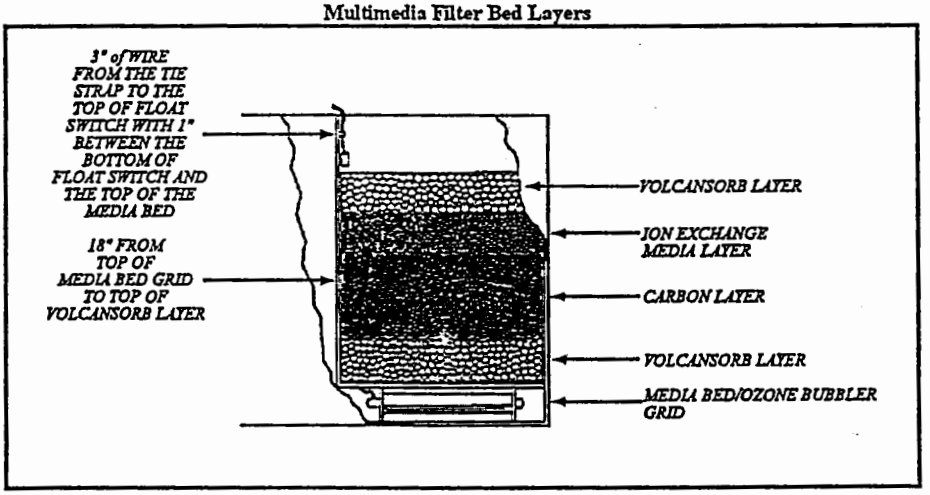

11) Float Switch

Uncoil the float switch and attach to the tie strap in the multimedia filter compartment of the Series I Tank so that the float has approximately 3" of swing and will activate the pump before the water level reaches the overflow.

12) Plumbing Unions

Remove the tie strap with the **UNION O-RINGS** attached to them. Place one O-Ring per loose Union inside the O-Ring grove on the male side of the Union. Reconnect the union by sliding the female end over the male end and hand tightening.

NOTE:
DO NOT USE A WRENCH TO TIGHTEN UNIONS.
UNIONS SHOULD ONLY BE HAND TIGHTENED.

13) Electrical Power

The **ELECTRICAL CONNECTION** should be connected next, by an electrician, according to the local codes. This connection is found on the back of the skid, where the electrical wires which need to be connected should be found protruding from the electrical junction box.

IMPORTANT:
DO NOT TURN ON THE POWER TO THE UNIT UNTIL ALL CONNECTIONS ARE MADE AND THE SYSTEM IS PREPARED FOR STARTUP. DAMAGE TO THE PRESSURE PUMP WILL RESULT OTHERWISE!!!

Section 3
How the ULTRASORB® System Works

The flow diagram below outlines the path that the waste stream follows as it is recycled. Refer to the Terminology section to identify the numbers on the flow diagram, along with location and purpose of each component. The General Theory section explains each step of the recycling process. A comprehensive understanding of theory and operation of the **ULTRASORB®** System should be achieved to help in the proper use and maintenance of the system.

Flow Diagram

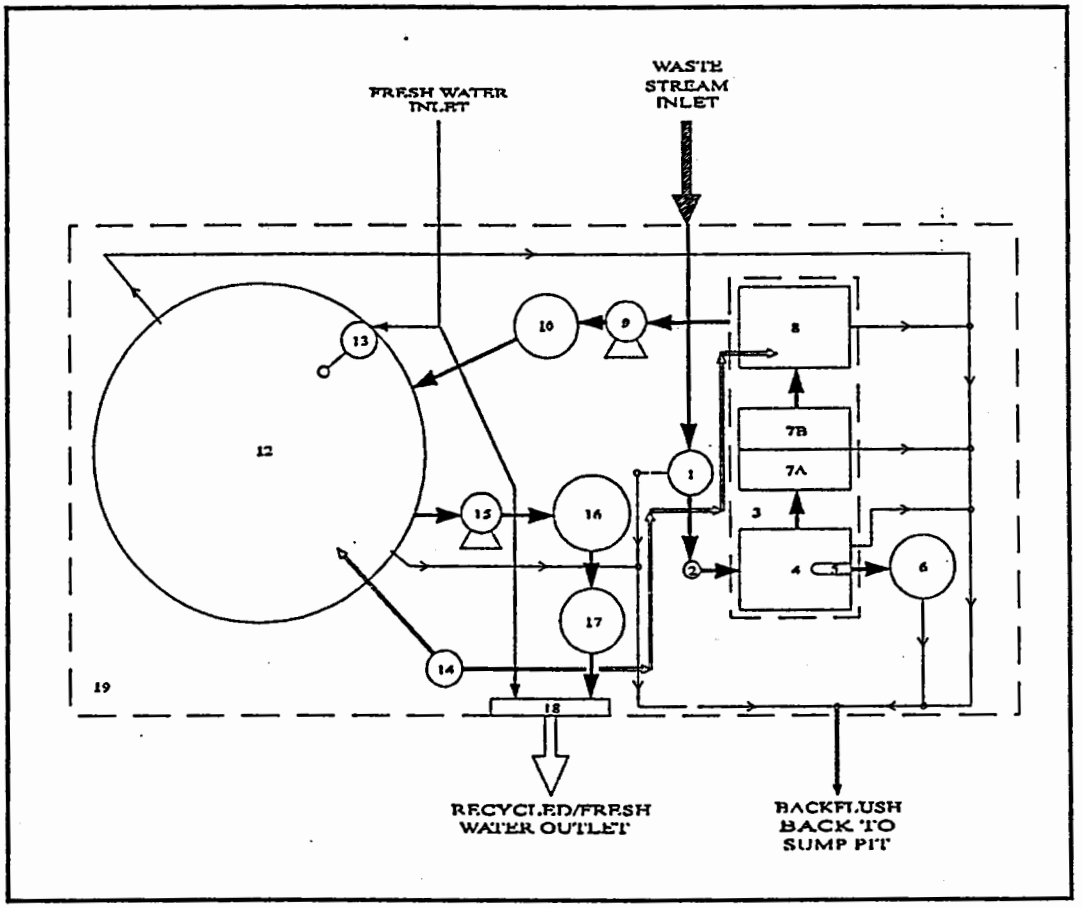

Terminology

The following terms correspond with to numbers indicated in the previous flow diagram.

1) **Centrifugal Coalescing Separator:** Tall 8" PVC vessel attached to the Skid used to invoke G-forces on the waste stream to separate solids/oils from the water .

2) **Aeration Tower:** Tall 2" PVC pipe attached next to the Separator used to mix air into the waste stream to enhance the separation and remove V.O.C.'s (volatile organic compounds).

3) **Series I Tank:** Rectangular tank that houses the Inclined Tube Coalescer, Oil Skimmer, Solids Separator/Hydrocarbon Absorber (HCA-2), Multimedia Filtration Bed, and the Float Switch.

4) **Inclined Tube Coalescer:** A series of $^1/_2$" PVC pipes welded together at a 60° incline used to settle solids and to further coalesce and float oils to be skimmed by the Oil Skimmer.

5) **Oil Skimmer:** In the first compartment of the Series I Tank above the Inclined Tube Coalescer, skims oil off of the surface of the water to be collected in the Hydrocarbon Accumulator.

6) **Hydrocarbon Accumulator:** Attaches to the Oil Skimmer and removes excess water from the accumulated oil and stores the waste oil for future disposal.

7) **A. Solids Separator (bottom) B. Hydrocarbon Absorber (HCA-2) (top):** Located in the second compartment of the Series I Tank where it filters small solids and absorbs hydrocarbons.

8) **Multimedia Filter Bed:** The third and final compartment of the Series I contains several layers of carbon, ion exchange, and volcansorb media which are used to absorb heavy metals or oils and trace chemicals.

9) **Centrifugal Pump:** Pumps from the Series I Tank to the Storage tank through the Hydrocarbon Absorber (HCA-3).

10) **Hydrocarbon Absorber (HCA-3):** Located next to the Centrifugal Pump and is housed in a HDPE cylindrical vessel, it is the last of the hydrocarbon absorbers used as a final measure of removing oils before the water is transferred to the Storage Tank.

11) **Chemical Injection Pump:** Located on the right leg of the control, it adds chemicals such as hydrogen peroxide or WC-1 to the waste water prior to the system to help control algae, bacteria, and odor.

12) **Storage Tank:** The large 500 gallon cylindrical polyethylene tank used to store the recycled water for later use.

13) **Fresh Water Makeup:** Comprised of a float valve inside of the Storage Tank used to replace water lost to evaporation or carryover.

14) **TurboHydrozone®:** 4" cylindrical vessel located along side of the control panel used to produce Ozone (O^3) which is bubbled underneath the Multimedia Filter in the Series I Tank, in the Storage Tank, and Aeration Tower to prevent any bacteria or algae growth.

15) **Jet Pump:** Located next to the Storage Tank, it pumps the recycled water out of the Storage Tank and through the Pressure Tank and Polishing Filter where it can be used.

16) **Pressure Tank:** Located in line after the Jet Pump it is a 18" cylindrical fiberglass reinforced plastic (FRP) tank used to pressurize the recycled water supply.

17) **Polishing Filter:** The last in line of the filters, it is housed in a stainless steel vessel and is used to filter any remaining solids out of the recycled stream before it is used.

18) **Control Panel:** Located in the middle of the front of the skid, it contains all of the pressure gauges pertaining to the system, hour meter and the control valve which is used to direct either recycled or fresh water to the water outlet located directly below the panel.

19) **Equipment Skid:** A 4' W x 9' L steel skid, houses all of the components of the system.

General Theory

The waste stream enters the system from the sump and first enters the Centrifugal Coalescing Separator. The separator invokes a circular motion that forces the solids to separate to the sides of the pipe where they eventually fall to the bottom and return to the pit, and helps the oils to coalesce to the middle where they and the water pass through to the Aeration Tower. Inside of the tower the water and oil are mixed with air to release any V.O.C.'s (volatile organic compounds) and aid in floating any of the oils.

The waste stream next enters the Series I Tank where it passes through a number of different solid filters and oil removers. The first compartment of the tank contains the Inclined Tube Coalescer, which further separates the oil, solid, and water mixture. The 60° incline causes the oils to separate to the top of the tube where smaller globules coalesce to form oil drops which then float up to the surface, and causes the solids to separate to the bottom of the tube where they settle to the bottom of the tank. See the diagram below for a visual example. The oils on the surface are skimmed off by the oil skimmer and then collected in the Hydrocarbon Accumulator where the rest of the water and oil separate. The water from the bottom of the Accumulator is drained back to the pad and the oil is allowed to accumulate. The solids that separate to the bottom of the first compartment of the Series I tank are periodically flushed with regular maintenance.

Inclined Tube Coalescer 60° incline separation action

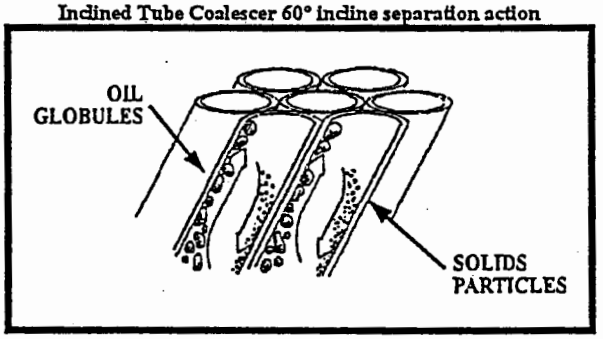

The second compartment is the first of three redundant oil absorbers and solids filters. The weight of the water that collects in the first compartment pushes the water through the bottom of the filter where the Hydrocarbon Absorber (HCA-2, the first of the oil absorbers) absorbs the oil and the Solids Separator attracts small solids. The water then flows to the third compartment.

The third compartment contains the Multimedia Filtration Bed and the float switch. When enough water flows into the third compartment, the float switch is activated turning on the Centrifugal Pump pulling the water through the filter media. As it passes through the filter it flows through the Volcansorb Layer, the second oil absorber. Then, it is flows through the Ion Exchange Media Layer, where any inorganic (heavy metals) materials are removed. It then flows through the Carbon Layer, where odors and organics are killed with the help of Ozone, which is bubbled up through from the bottom. Finally, the water flows through another layer of Volcansorb. The water then leaves the Series I Tank, from the suction of the Centrifugal Pump out of the bottom of the third compartment through the Outlet into the first phase of the Series II.

The Centrifugal Pump pushes the water through the Hydrocarbon Absorber (HCA-3), the last of the oil absorbers, where it removes any remaining fine oils which still might be present. This is done by *RGF*'s innovative coalescing matrix which utilizes a tight 60° poly grid design to attract low micron oil particles. This matrix can be seen in the diagram below.

Hydrocarbon Absorber (HCA-3) 60° poly grid matrix

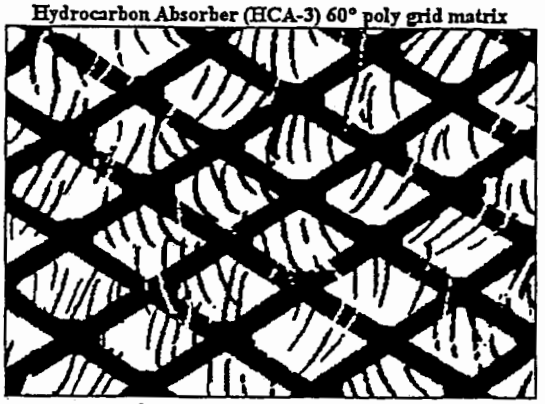

The water is finally stored in the Storage Tank, where Ozone is constantly bubbled to eliminate bacteria and algae growth. The water is now considered recycled and can be reused. When recycled water is needed, it is drawn from the Storage Tank into the second phase of the Series II by the Jet Pump. Pressure is maintained in this line through the use of the Pressure Tank. The water is then forced through the Polishing Filter which performs a final filtration before it is used. Water is then directed to the Control Panel, where there is a choice of using the recycled water or fresh water by turning the Three Way Valve. Then, the water exits the skid and is supplied to the pressure or steam cleaner. Located on the Control Panel are the Pressure Gauges for monitoring the operation of the Series II Filters and the TurboHydrozone™, and an hour meter which registers the amount of time the system has been in use. On the right leg of the Control Panel is the Peristaltic Chemical Injection Pump. This pump adds 35% hydrogen peroxide, WC-1 Water Conditioner, or other type of clarifying chemical to the main sump or other location to help control algae, bacteria, and odor.

Section 4
ULTRASORB® System Startup

The following startup procedure must be followed thoroughly in order to prevent damage to the pressure pump. Remember:

WARNING

DO NOT APPLY POWER TO THE SYSTEM UNTIL DIRECTED TO DO SO IN THE STARTUP PROCEDURE!

Startup Procedure

1) Hydrocarbon Absorber (HCA-3)

Open the air vent / bleed-off valve $^1/_4$ turn so that air will bleed out of the tank when the pump is turned on.

2) 3-Way Valve

Turn the 3-Way Valve located on the Control Panel to the **RECYCLE WATER** setting to vent trapped air.

3) Peristaltic Chemical Injection Pump

Turn the Chemical Output Adjustment Knob **ON**. Adjust the knob according to your specific water flow keeping the following in mind:

The chemical output of the pump ranges from .96 GPD at the minimum setting to 16.2 GPD at the maximum setting while energized continuously. It is recommended that only 3-5 gallons per week of 35% hydrogen peroxide or WC-1 at full strength be used. In order to prevent over injection of chemical, a secondary timer may be used to turn on the pump periodically during system operation. An alternative to a secondary timer can be accomplished by diluting the chemical in a pre-determined ratio to achieve 24 hour operation of the pump as desired.

4) Storage Tank

Make sure that the **MAKE-UP WATER VALVE** in the storage tank is set so the float is in it's lowest position (at a 45° angle downward) so that make-up water will enter the tank. Turn ON the make-up water and let fill to half full, this should all be done automatically by the Make-Up Water Valve and the water should shut OFF completely at the appropriate level. Once the system is in operation, check to make sure the Make-Up Water Valve is working properly.

5) Series I Tank

IMPORTANT
DO NOT FILL ONE COMPARTMENT AND ALLOW TO FLOW OVER INTO THE NEXT. FAILURE TO FILL THE ENTIRE SERIES I TANK EVENLY COULD CAUSE STRUCTURAL DAMAGE TO THE DIVIDER WALLS AND BAFFLES BETWEEN EACH COMPARTMENT.

FILL EACH COMPARTMENT of the Series I Tank, **EVENLY** and at the same time, with water until the water level reaches the level of the oil skimmer in the first compartment (approximately to the level where the water overflows into the next compartment) and to the level of the overflow for the second and third compartment. **OPEN** the **BALL VALVE** from the Outlet of the Series I Tank to the pump.

6) Pressure Pump

OPEN the **BALL VALVE** from the **STORAGE TANK** to the **JET PUMP. PRIME** the Jet Pump by removing the square headed **PRIMING PLUG** on the **PUMP HOUSING** until water starts to come out. Replace the plug.

7) Electrical Power

THE POWER CAN NOW BE TURNED ON TO THE SYSTEM!!!

8) System Startup

The Jet Pump will turn on causing water to come out of the system outlet. After a few seconds, turn the **THREE WAY VALVE** on the control panel to **OFF**. Check the system for leaks. Watch the **PRESSURE GAUGES** on the **OUTLET**, the pump turns ON at **20 PSI** and OFF at **40 PSI**.

The TurboHydrozone® will be energized and the compressor running continuously. Adjust the air pressure to the **TURBOHYDROZONE®** according to the depth of water in the Storage Tank (2' of water in a tank will cause only 1 PSI of pressure, 5' will cause 3 PSI, and 9' will cause 5 PSI) to get an even stream of bubbles flowing from the Macro Aerator. Look for the Blue Indicator Light on the tube to be lit to ensure ozone is being produced.

The Centrifugal Pump will turn on when necessary as the water level in the Series I Tank activates the Float Switch. **ADJUST** the **OIL SKIMMER** in the Series I Tank as needed, so when the water level in the first compartment starts to overflow, the skimmer is just barely skimming the water on the surface.

Throttle the flow on the **INLET FLOW CONTROL VALVE** from the sump pump into the Aeration Tower such that when the pump is running the water in the Inclined Tube Compartment of the Series I Tank is not overflowing.

9) Pressure or Steam Cleaner

Connect the pressure or steam cleaner to the system. **THE SYSTEM IS NOW READY TO USE!!!**

10) System Operation

TURN the control panel **THREE WAY VALVE** to **RECYCLE** and begin. When rinse water is desired, rotate the valve to Fresh Water. When no water is desired, rotate the valve to OFF.

Safety Precautions

WARNING

- **ALL OPERATING PROCEDURES, CAUTIONS, AND WARNINGS SHOULD BE ADHERED TO WHEN OPERATING THE ULTASORB® SYSTEM AND WHEN USING THE RECYCLED WATER THEREIN.**

- **ALL OSHA GUIDELINES SHOULD BE FOLLOWED AND MATERIAL SAFETY DATA SHEETS FOR ALL CHEMICALS BEING USED TO TREAT THE RECYCLED WATER SHOULD BE POSTED BY THE OWNER OF THE SYSTEM IN A CONSPICUOUS PLACE FOR ALL PERSONS COMING INTO CONTACT WITH THE SYSTEM.**

- **PROTECTIVE CLOTHING FOR ALL EXPOSED BODY AREAS SHOULD BE WORN BY ALL PERSONS OPERATING OR MAINTAINING THE SYSTEM TO AVOID PERSONAL INJURY.**

- **ENSURE ALL AREAS SOROUNDING THE SYSTEM ARE ADEQUATELY VENTILATED.**

- **PRECAUTIONS SHOULD BE TAKEN TO AVOID ADDING EXCESSIVE CHEMICALS TO THE RECYCLING SYSTEM. (REFER TO SECTION 6, CONTROLLING WATER QUALITY)**

Operational Notes

WARNING

- **<u>BEFORE OPERATING THE PRESSURE CLEANER</u>:**

1) **Make sure that the make-up water supply is always ON when cleaning FAILURE TO DO SO COULD RUN SYSTEM DRY AND DAMAGE THE PRESSURE PUMP AND <u>POSSIBLY</u> THE PRESSURE CLEANER.**
2) **After changing or draining the Polishing Filter housing, open the Drain Valve to the filter to vent trapped air before operating the Pressure Cleaner. FAILURE TO VENT TRAPPED AIR WILL DAMAGE THE PRESSURE CLEANER.**

WARNING

- TurboHydrozone™:

1) DO NOT look at the UV light in the Ozone Chamber. PERMANENT DAMAGE OR BURNS TO EYES OR SKIN MAY RESULT.
2) DO NOT open or attempt to repair the Ozone Chamber. If problems occur, call your serviceman or distributor for further instruction.
3) DO NOT BREATHE or INHALE THE OZONE GAS. PROLONGED BREATHING OF NOTICEABLE AMOUNTS OF OZONE may result in: respiratory irritation to nasal passages, throat, bronchial and pulmonary membranes; headache; nausea; burning, watery irritated eyes. In some instances (such as enclosed spaces and tanks) significant concentrations of ozone may collect. Adequately vent all tanks and enclosed spaces before entering for maintenance or repair until the level of ozone has depleted down to acceptable levels (<0.1 ppm). If an ozone odor is still noticeable continue ventilating until the odor is non-detectable. Ozone odor is similar to the smell near copy machines when making copies or Mig and Tig welders in operation and is the "fresh air " odor one sometimes notices after a thunderstorm.

General Note:

At a level of 1 ppm, ozone becomes intolerable to humans. A humans reaction to this level is the same as the reaction to a strong bleach or ammonia odor. Usually, the nose will indicate discomfort and tell to leave the room.

CAUTION

- HYDROCARBON ABSORPTION CARTRIDGES (HCA-2 AND HCA-3):

1) Do not operate the system when the absorption cartridges are saturated with oil, grease or fuel. OTHERWISE, OIL WILL ENTER THE STORAGE TANK, WHICH WILL REQUIRE DRAINING AND CLEANING.
2) *RGF* Cartridges have been lab and time tested - COPY CARTRIDGES HAVE BEEN KNOWN TO BREAKUP OR DISSOLVE THEREBY PLUGGING OTHER PARTS OF THE UNIT CAUSING EXCESSIVE PRESSURE AND EQUIPMENT DAMAGE!!!
3) Before Servicing be sure to RELIEVE THE PRESSURE on the Hydrocarbon Absorber (HCA-3) by using the drain valve or the RUBBER GASKET WILL BLOW OUT!!!

CAUTION

- **POLISHING FILTER :**

1) **TO PREVENT DAMAGE TO THE PRESSURE WASHER after changing filters or draining the housing, start the Pressure Pump and open the drain valve on the outlet side of the Filter prior to starting Pressure Washer(s) to vent trapped air.**
2) ***RGF* Filters have been lab and time tested - COPY FILTERS HAVE BEEN KNOWN TO BREAKUP OR DISSOLVE THEREBY PLUGGING OTHER PARTS OF THE UNIT CAUSING EXCESSIVE PRESSURE AND EQUIPMENT DAMAGE!!!**
3) **Before Servicing be sure to RELIEVE THE PRESSURE on the Polish Filter by using the drain valve or the RUBBER GASKET WILL BLOW OUT!!!**

Section 5
Preventive Maintenance Schedule

The following section is developed to keep the **ULTRASORB® System** in top working order. It is NECESSARY to follow the maintenance procedures below precisely as stated. The lack of maintenance, in the long run, will reduce productivity and can be both costly and time consuming. It is recommended that this format be copied and incorporated as a regular work routine.

WARNING

TURN OFF ALL POWER AND RELEASE PRESSURE BEFORE SERVICING THE SYSTEM AND REPLACING THE FILTERS. ALL GAUGES MUST READ ZERO!

Daily Maintenance

D-1 Pressure Gauges

With the Series I/Series II running check the difference between the pressure gauge inlets and outlets (HCA-3 Absorber and Polishing Filter).

GAUGES	Polishing Filter	HCA-3 Absorber	TurboHydrozone® Pressure
Inlet	psi	psi	
Outlet	psi	psi	psi

If the difference for the Polishing filter is 5 psi or more the filter needs to be Back Flushed (see PMS: Daily Maintenance, Back Flushing The Polishing Filter) or the cartridges need to be replaced. Replace the Hydrocarbon Absorber (HCA-2) if oil is present on the Polishing Filter.

D-2 TurboHydrozone®

Make sure the blue indicator light on the unit is still ON and that the ozone air inlet pressure is correct. Also, make sure the pressure regulator air condensation chamber (clear chamber) is drained of all fluids daily or as needed.

D-3 Series I Tank

1) Open all Drain Valves of the Series I Tank for a few moments to flush out the bottom of the tank. Check the clarity of the water coming from the valves. If the water is very murky, let run for several more seconds until the water becomes clearer.
2) Check that the Ozone Bubbler is still functioning properly in the third compartment of the Series I Tank.
3) If there is a large amount of oil in the accumulator, it will need to be drained off and disposed of properly. First, drain the water out of the bottom of the Hydrocarbon Accumulator using the Drain Valve. Then, drain the oil off by connecting a hose to the tank drain and leading it to a 5 gallon or more container and opening the Drain Valve.

D-4 Centrifugal Coalescing Separator

1) Open the Drain Ball Valve located underneath the Centrifugal Coalescing Separator for a few moments to flush out the bottom of the separator.
2) Close the valve.

D-5 Polishing Filter

Backflush the Polishing Filter if the pressure difference between the outlet and inlet gauges is 5 psi or more by the following procedure (Refer to the following diagram):

WARNING

DO NOT USE THE RECYCLED WATER DURING THE BACKFLUSH PROCEEDURE OR DAMAGE TO THE PRESSURE PUMP WILL OCCUR.

Back Flushing the Polishing Filter

1) Make sure the Three Way Valve is set to the OFF position.
2) Open valves **B**. Immediately after the valve is turned, water will come out of it.
3) Allow to flush until the all of the pressure is relieved from the pressure tank.
4) Close valve **B** and allow to build up to operating pressure.
5) Open the valve **A** to vent trapped air to prevent damage to the pressure washer.
6) Close valve **A** and allow to build up to operating pressure.
7) Run the system. If pressure is still 5 psi or higher, then the filters need to be replaced.

Back Flushing The Polishing Filter

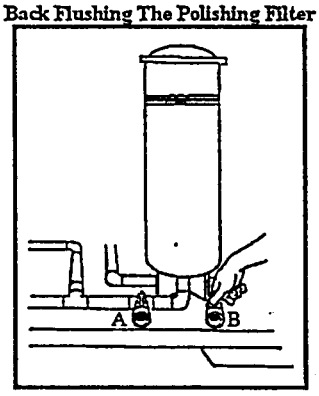

D-6 Peristaltic Chemical Injection Pump

1) Check the pump on a daily basis in order to ensure that it is working properly.
2) Note the setting of the Output Adjustment knob to see that it is set correctly. Adjust as needed.
3) Check the level in the chemical container and note the amount used in a 24 hour period. Fill the container as needed.

Weekly Maintenance

W-1 Trenches and Pits

On a weekly basis or as required the trenches and sump pits of the pad need to be checked for sediment level. The trenches' sediment level should not be more than half of the depth of the trench. Dig out the trench using a shovel and dispose of the waste accordingly. The settling pits should be dug out if there is at least 1/4 of the depth of the pit full of sediment.

IMPORTANT

DIG OUT THE TRENCHES AND PITS AS REGULARLY AS POSSIBLE. KEEPING THEM CLEARED OF SEDIMENT BUILD UP WILL RESULT IN BETTER WATER QUALITY THROUGHOUT THE ENTIRE SYSTEM.

W-2 Series I Tank

Perform a Series I Tank Multimedia Backflush on a weekly basis regardless of the amount of debris.

Back Flushing the Series I Tank:

1) Turn OFF the power to the system.
2) Turn ON and open the Backflush Hose Valve for the Series I Tank and let run continuously, water will start to come out of the Overflow.
3) Let the water run out for several minutes allowing it to back flush the Multimedia filter and loosen and remove any solids to the Overflow.
4) Shut OFF and close the Backflush Hose Valve.
5) Turn the power back ON.

Back Flushing the Series I Tank

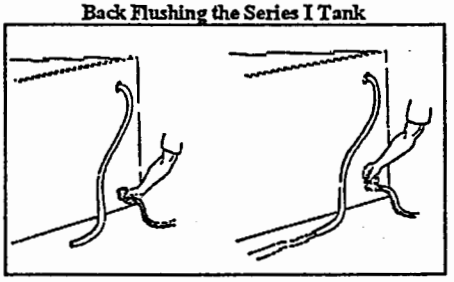

W-3 Polishing Filter

Remove the Polishing Filters and perform a filter flush once a week.

1) Remove the Polishing Filter assembly from the can (Refer to As Required Maintenance, Changing the Polishing Filter.
2) Using a garden hose with a standard nozzle, take the filter assembly and first flush water down the inside of the tubes to loosen the residue.
3) With the spray nozzle at a 45° angle with the outside of the filters, spray with sufficient pressure to remove the residue that has collected on the outside of the filters.
4) When all the residue has been removed; flush water down the inside of the tubes once more.
5) Replace the Polishing Filter assembly using the same procedure as stated for the removal.

IMPORTANT

DO NOT USE A PRESSURE WASHER WAND TO CLEAN THE POLISHING FILTERS. THE EXCESSIVE PRESSURE WILL DESTROY THE FILTERS.

As Required Maintenance

A-1 Changing the Hydrocarbon Absorber (HCA-3)

Change the Hydrocarbon Absorber (HCA-3) if the pressure difference between the outlet and inlet gauges is 5 psi or more.

1) Shut OFF the power to the system.
2) Open the Drain Valves located near the bottom of the Hydrocarbon Absorber (back of skid). Also, open the pressure relief valve on the top of the Absorber Housing.
3) After all pressure is relieved (gauges will read zero) and the housing is drained, remove the lid by first loosening the clamp lever on the clamp and removing the clamp, then removing the lid..
4) Remove both segments of the Absorber by pulling the handle located on the top, straight up and out.
5) Replace the old Absorber with the spare one and discard of the old one accordingly.
6) Replace the lid and clamp being sure that the clamp is pulled evenly around the lid and the clamp lever is fully shut or the gasket will blow out.
7) Turn the power back ON.

A-2 Changing the Polishing Filter

Change the Polishing Filter if the pressure difference between the outlet and inlet gauges is 5 psi or more and is not reduced after cleaning.

1) Shut OFF the power to the Series I/Series II.
2) Open the Drain Valves (valves B and C) located near the bottom of the Polishing Filter can (front of skid).
3) After all pressure is relieved (gauges will read zero) and the can is drained, remove the lid by loosening the wing nuts on top.
4) Remove the Filter by pulling the handle located on the top the filter assembly, straight up and out.

IMPORTANT

BE CAREFUL NOT TO LOOSE THE O-RING BETWEEN THE FILTER PIPE AND CARTRIDGE ASSEMBLY PLATE.

5) Replace the old filter assembly with the spare one and discard of the old filters accordingly.
6) Replace the lid and wing nuts being sure to tighten each one evenly (2-3 threads showing) to avoid gasket blow out.
7) Turn the power back ON.

Section 6
Controlling Water Quality

Controlling the water quality on the ULTRASORB® System is very important process that can greatly enhance the quality of your recycled water. By controlling the pH level, Total Alkalinity, the amount of oxidants and soaps that are used, you will be able to control the quality of water that you may desire. There are many factors which control the water quality. These factors are listed below in order of their appearance in the following section:

I. pH / Alkalinity
  A. pH
  B. Total Alkalinity
II. Oxidants
  A. Hydrogen Peroxide
  B. Ozone
III. Soaps
  A. Enviro-Control
I.V. Water Conditioners
  A. Water Conditioner-1 (WC-1)

I. pH / Alkalinity

A. pH

pH (potential hydrogen) is a relative measure to indicate how acidic or alkaline a substance is. Thus, it denotes the degree or strength of alkaline or acidity. Some acids or alkaline substances are stronger than others and, in order to compare them, a pH scale has been devised. The pH numerical index ranges from 1.0 (extremely acidic) to 14.0 (extremely alkaline). The midpoint of 7.0 indicates that the solution is neutral. That is, it is neither acids nor alkaline. Pure distilled water is a neutral solution.

The pH scale only goes as high as 14 and the difference from 0 to 14.0 doesn't seem very great, but every degree on the pH scale is a difference of 10 times, and every two degrees is a difference of 10 times 10. For example, if you have an alkaline cleaning solution of 10.0 and increase it to 11.0, you are making that solution 10 times more alkaline. If you go up two degrees to a pH of 12.0, the solution becomes 100 times more alkaline, and so on. It can be seen than that the scale isn't as small as it seems and a change of only 1 degree on the pH scale can change the entire strength of a solution.

Controlling pH

To Raise pH: The chemical usually added to raise the pH level is Soda Ash. How much to add is basically a trial and error operation, but a general rule of thumb that is good to follow is to **add 1/4 pounds of Soda Ash for every 1,000 gallons of water.** After adding the Soda Ash, wait **for about an hour before re-checking the pH level.** Take whatever further action is indicated by the test.

To Lower pH: The chemical normally added to lower the pH level is called Muriatic Acid, which is actually a dilute form of the more hazardous hydrochloric acid and comes in liquid form. Another acid product is the so-called Dry Acid or Sodium Sulfate, which comes in a granular form. **Acid of any type should always be added directly to the water, NEVER the water to the acid! The amount of acid required is determined by performing an acid demand test with the water test kit.**

B. Total Alkalinity

Total Alkalinity is the measure of the total amount of alkaline chemicals in the water and not the same as pH. pH measures the strength of an alkaline (or acid), while alkalinity measures the amount of alkali's present. While pH and Total Alkalinity are not the same thing, **Total Alkalinity can have an effect on pH.** This effect will basically be seen in how fast or easily changes in pH can be accomplished.

Controlling Alkalinity

For our purposes, the **Total Alkalinity should be kept at about 150 ppm.** In general, alkalinity has not been a problem for recycling, providing you are using a neutral soap. If you have a drum of water and introduce a scoop of alkaline clearer, you may take the pH and get a reading of 12. That does not mean that if you add a second scoop of cleaner, you will get a different reading - in fact, it will probably be identical for this one and a third one. What will change is the Total Alkalinity.

II. Oxidants

A. Hydrogen Peroxide

Hydrogen peroxide is an oxidizer that exhibits great oxidizing and purifying characteristics. It is not affected by the pH level and the only by products after oxidation are oxygen and water. Also, the hydrogen peroxide level does not need to be closely controlled. It can have levels ranging from 1 - 10 ppm. It will significantly reduce the amount of B.O.D. (biological oxygen demand) and C.O.D. (chemical oxygen demand) and will also remove any odors that may be present and increase the clarity of the water.

B. Ozone

Ozone is another oxidizer that exhibits great oxidizing and purifying characteristics. Ozone is different than hydrogen peroxide in that it is not in a liquid form. Ozone is produced by a unique process developed by *RGF* in which a special chamber called the **TurboHydrozone®** uses air as it's agent to produce the ozone. This means you never have to check to see if you are going to run out of it. The ozonated air is then bubbled inside of the storage tank which agitates the water thus oxidizing it, which reduces B.O.D.'s and C.O.D.'s, removes smells and improves water clarity.

III. Soaps

Soaps are added to closed looped recycling water systems to help more easily remove the oils and road film off of the equipment being cleaned. This is because soaps are surfactants which help to relieve the surface tension of the water enabling the oils to float to the surface more readily for easier removal. Some soaps, however, may cause the oils to emulsify which will not allow for easy removal which in turn may end up back on the equipment. In order to prevent this, the soaps in consideration for use with the **ULTRASORB® System** must be non-ionic and amphoteric surfactants. They also must be formulated to be low to moderate foaming and limited oil emulsifying properties while remaining a neutral pH cleaner.

A. Enviro-Control

RGF has developed a specially formulated soap for closed-looped recycling systems called **Enviro-Control** to use with the **ULTRASORB® System.** This soap is a water white blend of biodegradable surfactants containing all of the qualities listed above, plus it helps prevent bacteria and algae growth, inhibit corrosion, it has no dyes, perfumes, or thickeners added, and it helps to flocculate oil accumulation.

Enviro-Control can be purchased in a super concentrated form through your distributor or *RGF* at **1-407-848-1826** or **FAX 1-407-848-9454.**

I.V. Water Conditioners

A. Water Conditioner-1 (WC-1)

Water conditioners are a good addition to a recycling system because they help to maintain good water quality and help in releasing suspended solids. *RGF* has available a water conditioner that can do all of this and more, the **Water Conditioner 1 (WC-1).** This water conditioner has many water quality improving abilities. It aids in the flocculation of suspended solids, reduces B.O.D. and C.O.D. loading, and helps to softens the water. WC-1 also inhibits corrosion on your system, providing more years of service and will help to lower the total suspended solids count, which will improve the color and clarity of your recycled water. Since WC-1 can provide all of these benefits, it should be made a regular part of the chemical additions to your system for improving water quality.

Section 7
Trouble Shooting

The following trouble shooting guide has been arranged into three major categories: I. Electrical, II. Flow, and III. Chemical.

I. Electrical:

CAUTION

ENSURE ALL POWER TO THE UNIT IS REMOVED AND PROPER ELECTRICAL SAFETY PRECAUTIONS ARE MET BEFORE OPENING ANY ELECTRICAL JUNCTION BOXES, PANELS OR PUMP COVERS!

- **Sump Pump Not Operating:**
  1) Check the power to the Sump Pump.
     A) Verify that power is supplied and the breaker is shut. Also, check that the proper connections were made to the sump.
     B) If electrical problems still exists REFER TO THE INSTALLATION AND OPERATING INSTRUCTIONS MANUAL or CALL YOUR DISTRIBUTOR FOR FURTHER TROUBLE SHOOTING ADVICE.
  2) Check the Float Switch in the Sump Pit.
     A) Verify that the float switch is unobstructed and free to swing.
     B) Lift up the float switch. The pump should turn on when the float is lifted and shut off when released.
     B) If electrical problems still exists call your distributor for further trouble shooting advice.
  3) Check the inlet to the pump
     A) Verify that the inlet of the Sump Pump is free from obstruction. Remove all accumulated debris in and around the inlet strainer.
  4) Listen with the pump on to hear that the pump is running. If it is not running or runs and doesn't pump water, bring to a service representative for the specific pump to see whether the pump is burned out or the pump mechanism is not destroyed.

- **Centrifugal Pump Not Operating:**
  1) Check the power to the Pump.
     A) Verify that power is supplied and the breaker is on. Also, check that the proper connections were made to the electrical junction box on the back of the skid, SEE SECTION 9, ENGINEERING DIAGRAMS: Electrical Diagram Sheet No. 5.
     B) If electrical problems still exists REFER TO THE GRUNDFOS SERIES E INSTALLATION AND OPERATING INSTRUCTIONS MANUAL SECTION 7.
     C) CALL YOUR DISTRIBUTOR FOR FURTHER TROUBLE SHOOTING ADVICE.
  2) Check the Float Switch in the Series I Tank.
     A) Verify whether or not the float switch is unobstructed and free to swing.
     B) Lift up the float switch to verify whether the pump turns on. Then check that the

float switch is working properly.

C) CALL YOUR DISTRIBUTOR FOR FURTHER TROUBLE SHOOTING ADVICE.

3) Check the prime of the Pump.
   A) Open the priming plug on the pump to re-prime the pump. REFER TO THE GRUNDFOS SERIES E INSTALLATION AND OPERATING INSTRUCTIONS MANUAL SECTION 5.
4) Check the Isolation Valve from the Series I Tank.
   A) Make sure the Valve is OPEN.
   B) Check the hose from the Valve to the intake of the Pump to verify if it is unobstructed.

- **Jet Pump Not Operating:**
  1) Check the power to the Pump.
     A) Verify that power is supplied and the breaker is shut. Also, check that the proper connections were made to the electrical junction box on the back of the skid, SEE SECTION 9, ENGINEERING DIAGRAMS: Electrical Diagram Sheet No. 5.
     B) If electrical problems still exists REFER TO THE GRUNDFOS JET STAR INSTALLATION AND OPERATING INSTRUCTIONS MANUAL SECTION 4.
     C) CALL YOUR DISTRIBUTOR FOR FURTHER TROUBLE SHOOTING ADVICE.
  2) Check the Pressure Switch for the pump.
     A) Verify whether it is stuck in the cut off pressure position. REFER TO THE GRUNDFOS JET STAR INSTALLATION AND OPERATING INSTRUCTIONS MANUAL SECTION 4.
     B) CALL YOUR DISTRIBUTOR FOR FURTHER TROUBLE SHOOTING ADVICE.
  3) Check that the Isolation Valve from the Storage Tank to the Jet pump is open.

- **No Air Flow From Macro Aerator:**
  1) Compressor not running.
     A) Verify that power is supplied and the breaker is shut. Also, check that the proper connections were made to the electrical junction box on the back of the skid, SEE SECTION 9, ENGINEERING DIAGRAMS: Electrical Diagram Sheet No. 5.
  2) Check hose connections for leaks or loose connections.
  3) REFER TO THE THOMAS INDUSTRIES INC. TECHNICAL MANUAL.

- **TurboHydrozone™ Not Operating:**
  1) Blue Indicator Light on the TurboHydrozone™ chamber is not lit.
     A) Verify that power is supplied and the breaker is shut. Also, check that the proper connections were made to the electrical junction box on the back of the skid, SEE SECTION 9, ENGINEERING DIAGRAMS: Electrical Diagram Sheet No. 5.
     B) Contact your distributor or ***RGF* Environmental Systems, Inc. (407) 848-1826 or FAX (407) 848-9454.**

II. Flow:

- **Sump Pit is Overflowing:**
  1) Sump Pump not operating.
     A) SEE ELECTRICAL: Sump Pump Not Operating.
  2) Make-Up Water Valve open and Storage Tank is overflowing.
     A) SEE FLOW: Storage Tank Overflowing.
  3) Recent large amount of rainfall.
     A) SEE FLOW: Storage Tank Overflowing.
  4) Series I Tank or Storage Tank drain valves are open.

- **Series I Tank:**
  1) Centrifugal Coalescing Separator Drain is clogged.
     A) Unscrew Drain Valve assembly from the bottom and cleanout the obstruction.
  2) No Oil Skimmer flow.
     A) Adjust the Skimmer arm to skim a small quantity of water when the Sump Pump is running.
     B) Adjust the flow from the Aeration Tower Crossover Valve so that the Skimmer will skim properly.
  3) Hydrocarbon Accumulator is returning oil to the sump.
     A) The Accumulator is full of oil and should be drained.
     B) Accumulator is improperly assembled and should be reassembled according to the specifications in the installation section.
  4) First Compartment is overflowing (too much water going to skimmer and Hydrocarbon Accumulator).
     A) Solids Separator is clogged and should be removed and rinsed.
     B) Hydrocarbon Absorber (HCA-2) is laden with fine particulate and should be replaced.
     C) Aeration Tower Crossover Valve too far open and should be throttled.
  5) Third compartment is overflowing.
     A) Centrifugal Pump not operating. SEE ELECTRICAL: Centrifugal Pump Not Operating.
     B) Multimedia Filter is clogged up. Perform a Series I Backflush (SEE PMS: Weekly Maintenance, Back Flushing The Series I Tank). If problem still exists after back flush, then replace the media.
     C) Isolation Valve to the skid is shut.

- **No Water Flowing To Storage Tank:**
  1) Centrifugal Pump not operating. SEE ELECTRICAL: Centrifugal Pump not Operating.
  2) Hydrocarbon Absorber (HCA-3) is clogged (RARE).
     A) The absorber needs to be changed and flushed (SEE PMS: Daily Maintenance, Changing The Hydrocarbon Absorber).
     B) If changing doesn't remedy the problem, then the absorber filters are old and need to be replaced.
     C) Isolation Valve from the Series I Tank is shut.

- **Storage Tank Overflowing:**
  1) Make-Up Water Valve running constantly.
     A) Check that the Make-Up Float moves freely and is unobstructed.
     B) If Make-Up Float is in proper off position and the Valve is still running, secure Fresh Water Supply and repair Valve.

2) Recent large amount of rainfall.
   A) Drain a sufficient amount of water from the storage tank to the sewer (check with local authorities) to return the system to normal operation.

- **<u>No Recycled Water Flow or Low Recycled Water Pressure</u>:**
  1) Jet Pump not operating.
     A) SEE ELECTRICAL: Jet Pump Not Operating.
  2) Jet Pump running constantly but unable to build any pressure.
     A) Check the pressure on the Pressure Tank using a standard tire pressure gauge. The pressure should be approximately 20 psi.
        i.) If the pressure is low then add air using a standard bicycle tire pump.
        ii.) If the pressure is still low and not taking the added air then, the bladder inside of the Pressure Tank is burst and the bladder or tank should be replaced. Call your distributor for further assistance.
  3) Polish Filter Cartridges are dirty. Perform a Backflush (SEE PMS: Daily Maintenance, Back Flushing The Polishing Filter)
  4) Backflush Valves are improperly positioned.

III. Chemical:

- **Effluent Recycled Water Smells:**
  1) Hydrogen Peroxide feed system solution is low or empty.
  2) Hydrogen Peroxide feed system is not working properly
     A) REFER TO THE LMI PUMP OPERATION MANUAL.
  3) TurboHydrozone™ not operating. SEE ELECTRICAL: TurboHydrozone™ Not Operating.

- **Effluent Recycled Water is Very Cloudy:**
  1) Hydrogen Peroxide feed system solution is low or empty.
  2) Hydrogen Peroxide feed system is not working properly
     A) REFER TO THE hp CONTROLLER OPERATION MANUAL.
     B) REFER TO THE LMI PUMP OPERATION MANUAL.
  3) TurboHydrozone™ not operating. SEE ELECTRICAL: TurboHydrozone™ Not Operating
  4) The Water Conditioner (WC-1, optional) has not been added or residual level is low. Increase the WC-1 injection rate.

NOTE:
If repeated attempts to reduce smell or clear up the recycled water fail to improve the water quality, or if the amount of soap needed to clean adequately rises to an unacceptable level. The water has become over burden with dissolved and suspended solids. THE SYSTEM SHOULD BE DRAINED AND THE SPENT WATER DISPOSED OF IN ACCORDANCE WITH LOCAL, STATE, AND FEDERAL REGULATIONS.

Section 8
Replacement Parts

The following is a list of commonly needed replacement parts. Have the **Model # and Serial # of** the system ready when trying to order. Identify the part needed with the part # and description and call *RGF* or your local distributor to place an order.

PART #	DESCRIPTION
FILTERS AND PARTS	
FL-03P	HCA-3 ASORBER FILTER
FL-46	25M POLISHING FILTER (7 needed)
FL-01	HCA-2 SMALL SQUARE FILTERS
FL-14	VOLCANSORB MEDIA
FP-04	BRASS WING NUT
FP-07	POLISH HOUSING RIM GASKET
FP-09	POLISH FILTER STANDPIPE O-RING
FP-16	POLISH FILTER CHNGE OUT CLUSTER (W/O O-RING)
CHEMICALS	
WC-1-55	WATER CONDITIONER - 55 GALLONS
WC-1-30	WATER CONDITIONER - 30 GALLONS
WC-1-5	WATER CONDITIONER - 5 GALLONS
EC-1-6S	ENVIRO-CONTROL CONCENTRATE
HY-01	HYDROGEN PEROXIDE 35% SOLUTION
PUMPS AND PARTS	
PU-32	1/3 hp S.S. LIFT STATION SUMP PUMP
PU-33	1/2 hp S.S. LIFT STATION SUMP PUMP
PU-34	1/2 hp S.S. JET PUMP
PU-21	1/3 hp CENTRIFUGAL PUMP
PU-52	VITON SEAL FOR CENT. PUMP
PU-30	10' MERCURY FLOAT SWITCH
PU-29	LMI PERISTALIC CHEMICAL PUMP
MISC. PARTS AND COMPONENTS	
PT-04	AQUACHECK TEST STRIPS (BOTTLE OF 50)
PT-21	pH PEN
PT-22	H_2O_2 TEST KIT
PT-05	1/12 hp DIAPHRAGM COMPRESSOR
PT-08	FILTER FOR COMPRESSOR
PT-12	TOUCH-UP PAINT
HF-23	1/4" O.D. POLYETHYLENE TUBING
PT-17	REPLACEMENT BLADDER FOR PRESSURE TANK

Section 9
Engineering Diagrams

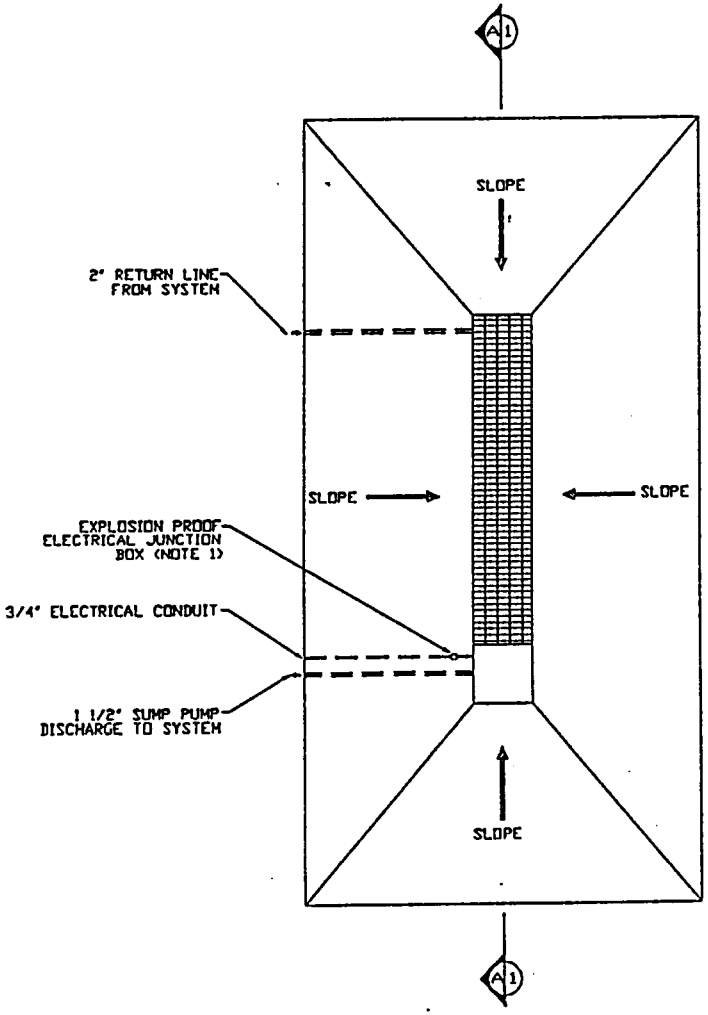

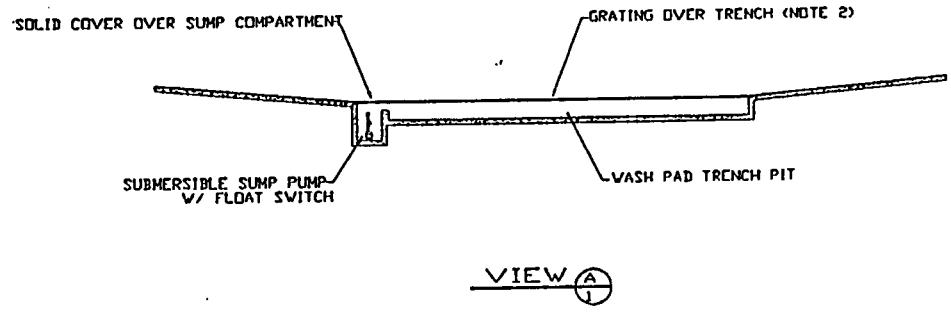

NOTE:

1) JUNCTION BOX NEEDS TO BE ABLE TO WITHSTAND HEAVY LOADS AND WET CONDITIONS. THE BOX IS NEEDED FOR CONNECTION TO FLOAT SWITCH.

2) TRENCH PIT GRATING NEEDS TO BE ABLE TO WITHSTAND HEAVY LOADS.

THE ULTRASORB SYSTEM

TITLE: SIMPSON RC-2001

RC-WPAD

A

NONE

6/07/94

Removal and Replacement of Motor

Warning

Ensure power is disconnected prior to removing the motor.

1. Follow Steps 1-10 in ***Removal of Mechanical Seal.***
2. Loosen and remove 4 (3/8") socket head bolts that hold motor to motor stool.
3. Remove old motor and replace with new motor.
4. Reinstall four bolts and tighten.
5. Follow steps 11-16, and 21-23 in ***Replacement of Mechanical Seal and O-rings.***

SECTION 8.

Service Guide

If the Motor Will Not Start:

1. Check to see if the motor has power. Be sure the switch is on and the fuses are not blown or circuit breaker tripped.
2. Check all wiring connections to see if they are tight. Check if motor is warm to the touch. If it is, more than likely the internal protection in the motor has been tripped. Ensure that the motor has plenty of ventilation and the proper voltage is being applied.
3. If the motor is cold to the touch and power is being applied, the motor may be defective. Contact your Grundfos dealer for a replacement motor.
4. Check the pressure switch contacts. The contacts may be stuck open or dirty. ***Extreme caution is advised. Disconnect power before cleaning.***
5. If the motor hums, disconnect power and try to rotate shaft. The shaft should rotate freely.

If the Pump Runs But Does Not Deliver Water or Pressure:

1. Be sure the pump is completely primed (see sections on priming). Repriming may be necessary.
2. Be sure the foot valve or ejector is properly submerged.
3. Check to see if the end of the foot valve or ejector is clogged or buried.
4. Check for leaks in suction piping. On deep well units, also check pressure piping.
5. On deep well installations, check ejector for a blockage or clog.
6. Check piping for blockages or clogs.
7. Check impeller for blockages or clogs.

If Pump Won't Shut Off:

1. Check pressure switch for proper setting.
2. Check piping from pump to house for leaks.
3. Check port of pressure switch – it may be clogged or blocked. To clean, turn off power, remove power lead, remove switch from piping, clean port.
4. Check for leaks in suction line.
5. Check water pumping level.
6. If motor is not running at correct speed, check for proper motor connections and voltage.

If Pump Starts and Stops too Often:

1. Check to see if storage tank is water logged. Check air control valve – it may be defective.
2. Check for leaks in piping from pump to house.
3. Be sure storage tank does not leak.

Jet Star Components
½, ¾, and 1 HORSEPOWER

POSITION	QUANTITY REQUIRED	DESCRIPTION	PART NUMBER		
			½ HP	¾ HP	1 HP
1	1	Motor	84Z000J1	84Z000J2	84Z000J3
2	1	Motor Stool	460154	460154	460154
3	4	Motor Bolts, 3/8" x 1", 16 UNC	See Kits	See Kits	See Kits
4	1	Cover Plate	465142	465142	465149
5	1	Shaft Seal 5/8"	See Kits	See Kits	See Kits
6	1	Impeller	465144	465145	465150
7	1	O-Ring 194.5mm x 3mm	See Kits	See Kits	See Kits
8	1	Clamp	465001	465001	465001
9	1	Clamp Nut	See Kits	See Kits	See Kits
10	1	Socket Head Bolt 3/16"	See Kits	See Kits	See Kits
12	1	Guide Vane	465140	465140	465146
13	1	O-Ring 1.359" x 0.139"	See Kits	See Kits	See Kits
14	1	Pressure Gauge	ID3623	ID3623	ID3623
15	1	Pump Housing	465143	465143	465143
16	1	Deep Well Plug	See Kits	See Kits	See Kits
17	1	Pipe Plug 1/4" NPT	See Kits	See Kits	See Kits
18	1	O-Ring 1.045" x .139"	See Kits	See Kits	See Kits
19	1	O-Ring 1.171" x .139"	See Kits	See Kits	See Kits
20	1	Gasket	See Kits	See Kits	See Kits
21	1	Shallow Well Ejector	See Kits	See Kits	See Kits
22	2	Pressure Switch Fittings	See Kits	See Kits	See Kits
23	1	Pressure Switch Tubing	See Kits	See Kits	See Kits
24	1	Pressure Switch	UA6001	UA6001	UA6001
25	1	Base	460155	460155	460155
26	2	Star Washer 1/4"	See Kits	See Kits	See Kits
27	4	Base Bolts	See Kits	See Kits	See Kits

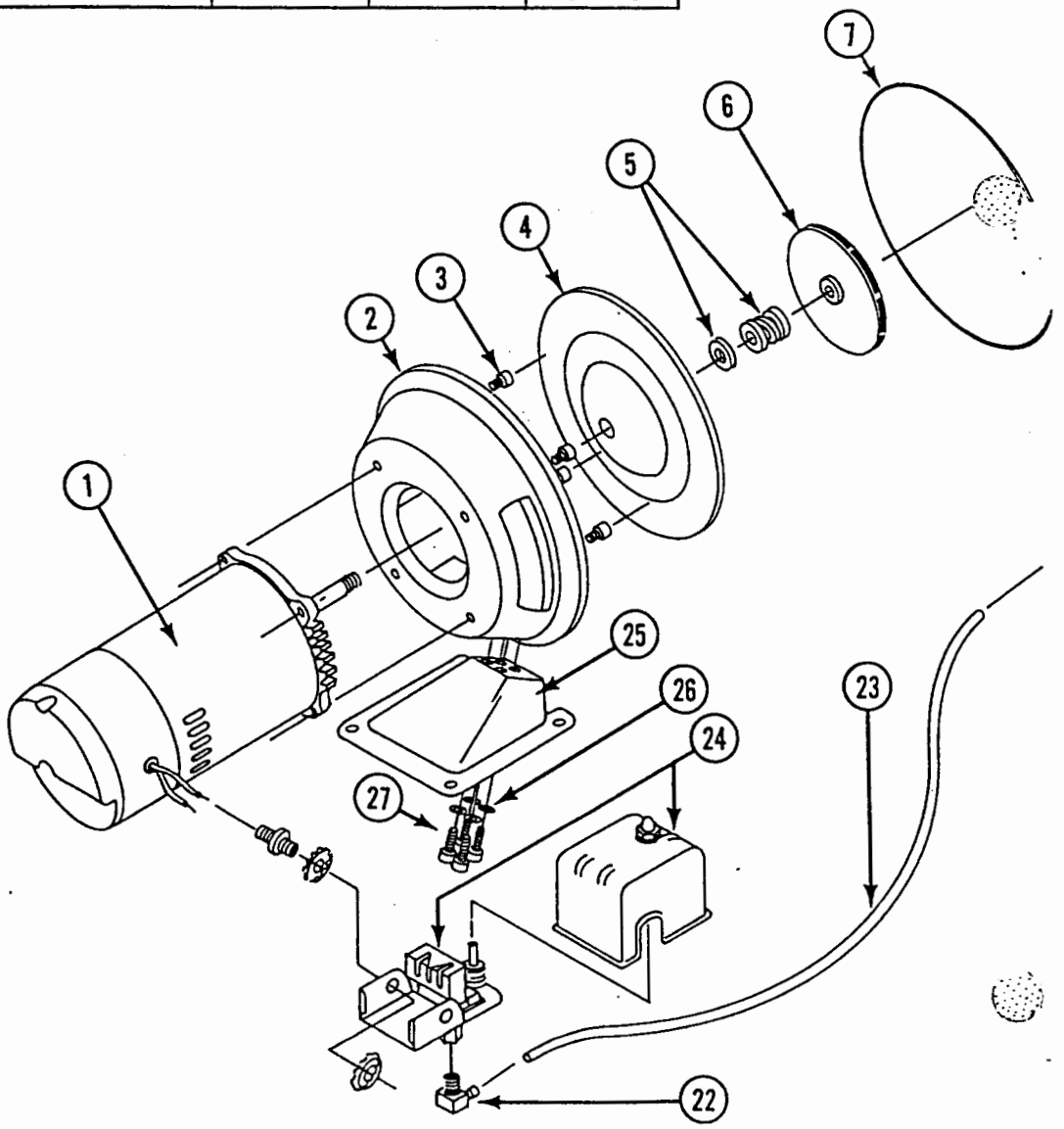

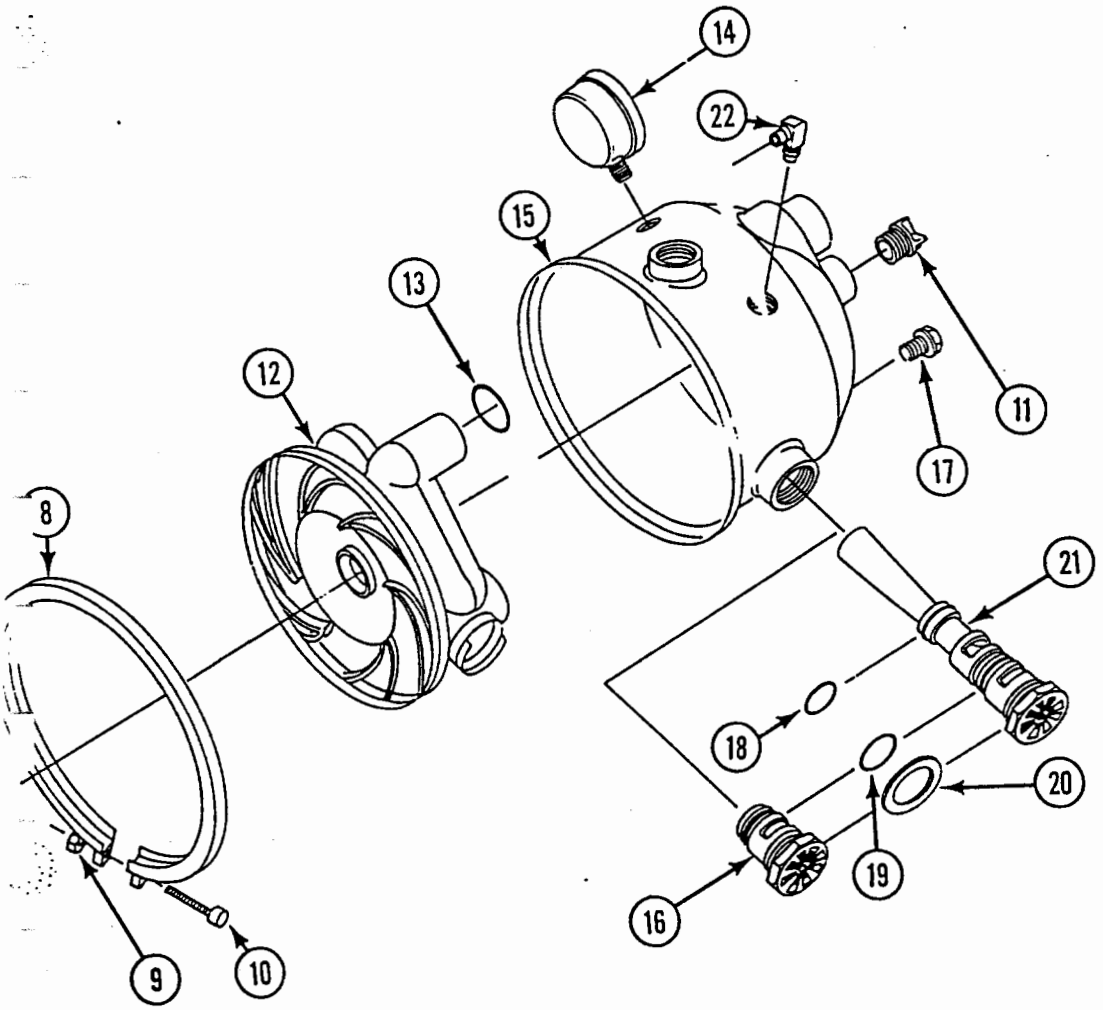

Jet Star Kits

½, ¾, 1 HORSEPOWER

DESCRIPTION	PART NUMBER		
	½ HP	¾ HP	1 HP
Shaft Seal: includes position #5	465126	465126	465126
O-ring & Gasket Kit: includes position #7, 13,18,19,20	465127	465127	465127
Shallow Well Ejector Kit: includes position #18, 19, 20, 21	465108	465109	465109
Plug Kit: includes position #11, 16, 17	465114	465114	465114
Tubing Kit: includes position #22, 23	465115	465115	465115
Bolt Kit: includes position #3, 9, 10, 26, 27	465116	465116	465116
Deep Well Plug Kit: includes position #16, 19, 20	465117	465117	465117

Limited Warranty

Products manufactured by GRUNDFOS PUMPS CORPORATION (GRUNDFOS) are warranted to the original user only to be free of defects in material and workmanship for a period of 18 months from date of installation, but not more than 24 months from date of manufacture. GRUNDFOS' liability under this warranty shall be limited to repairing or replacing at GRUNDFOS' option, without charge, F.O.B. GRUNDFOS' factory or authorized service station, any product of GRUNDFOS manufacture. GRUNDFOS will not be liable for any costs of removal, installation, transportation, or any other charges which may arise in connection with a warranty claim. Products which are sold but not manufactured by GRUNDFOS are subject to the warranty provided by the manufacturer of said products and not by GRUNDFOS' warranty. GRUNDFOS will not be liable for damage or wear to products caused by abnormal operating conditions, accident, abuse, misuse, unauthorized alteration or repair, or if the product was not installed in accordance with GRUNDFOS' printed installation and operating instructions.

To obtain service under this warranty, the defective product must be returned to the distributor or dealer of GRUNDFOS products from which it was purchased together with proof of purchase and installation date, failure date, and supporting installation data. Unless otherwise provided, the distributor or dealer will contact GRUNDFOS or an authorized service station for instructions. Any defective product to be returned to GRUNDFOS or a service station must be sent freight prepaid; documentation supporting the warranty claim and/or a Return Material Authorization must be included if so instructed.

GRUNDFOS WILL NOT BE LIABLE FOR ANY INCIDENTAL OR CONSEQUENTIAL DAMAGES, LOSSES, OR EXPENSES ARISING FROM INSTALLATION, USE OR ANY OTHER CAUSES. THERE ARE NO EXPRESS OR IMPLIED WARRANTIES, INCLUDING MERCHANTABILITY OR FITNESS FOR A PARTICULAR PURPOSE, WHICH EXTEND BEYOND THOSE WARRANTIES DESCRIBED OR REFERRED TO ABOVE.

Some jurisdictions do not allow the exclusion or limitation of incidental or consequential damages and some jurisdictions do not allow limitations on how long implied warranties may last. Therefore, the above limitations or exclusions may not apply to you. This warranty gives you specific legal rights and you may also have other rights which vary from jurisdiction to jurisdiction.

GRUNDFOS®

GRUNDFOS Pumps Corp. • 2555 Clovis Ave.• Clovis, CA 93612
Support Centers: Allentown, PA • Atlanta, GA • Mississauga, Ontario, Canada

L-JS-TL-003	6/31/91
PRINTED IN USA	

Installation and Operating Instructions

Grundfos Series E

Close Coupled, End Suction Centrifugal Pumps

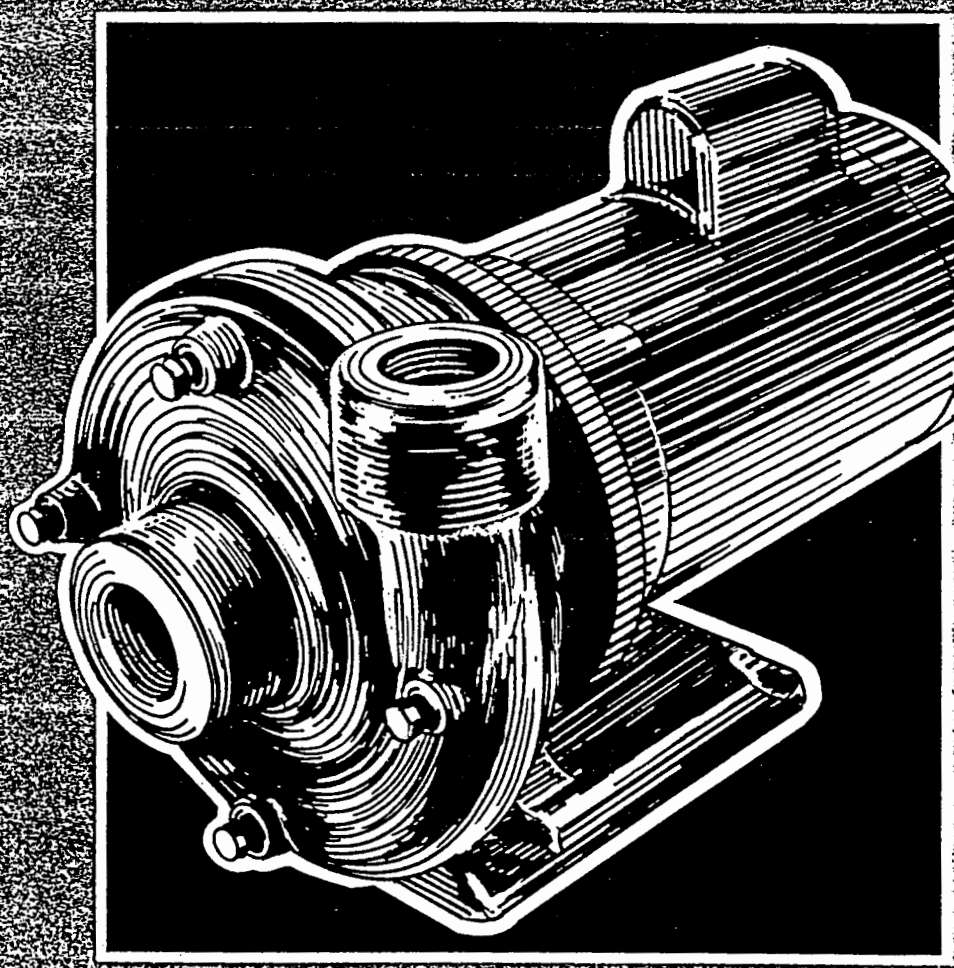

1. SHIPMENT INSPECTION Page 1
2. APPLICATIONS AND OPERATING RANGES Page 1
3. INSTALLATION Page 2
4. ELECTRICAL Page 3
5. PUMP START-UP Page 4
6. OPERATION AND MAINTENANCE Page 5
7. TROUBLE-SHOOTING Page 7

Please leave these instructions with the pump

Grundfos Series E
Installation and Operating Instructions
TABLE OF CONTENTS

CONTENTS	PAGE
SECTION 1	
Shipment Inspection	1
SECTION 2	
Applications and Operating Ranges	
Applications	1
Operating Ranges	1
SECTION 3	
Installation	
Pump Location	2
Foundation	2
Pipework	2
Suction Pipe	2
Discharge Piping	2
Bypass	3
SECTION 4	
Electrical	
Motor	3
Motor Mounting Position	3
Supply Power	3
Field Wiring	3
Motor Protection	3
SECTION 5	
Pump Start-up	
Priming the Pump and Venting the System	4
Check Motor Rotation	4
Starting and Adjusting	4
SECTION 6	
Operation and Maintenance	
Operation	5
Maintenance	5
Motor Replacement	5
SECTION 7	
Troubleshooting	
Preliminary Tests	7
Troubleshooting Charts	8

Installation and Operating Instructions

Grundfos Series E

Your Grundfos Series E End Suction pump is of the utmost quality. Combined with proper installation, your Grundfos pump will give you many years of reliable service.

To ensure the proper installation of the pump, carefully read the complete manual before attempting to install the pump.

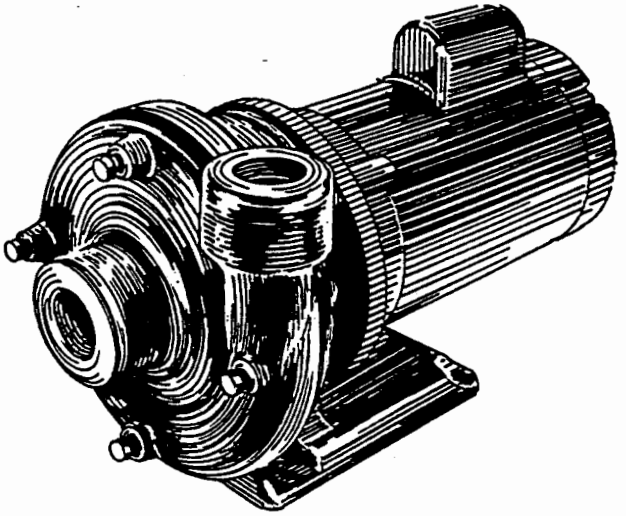

SECTION 1.

Shipment Inspection

Examine your pump carefully to make sure that no damage has occurred during shipment.

Your Grundfos Series E pump should remain in its shipping carton until it is ready to be installed. This carton has been specially designed to protect the pump from damage. During unpacking and prior to installation, care should be taken to ensure the pump is not dropped or mishandled. Immediately report any damage in writing to the transportation company and ask to have it inspected. Do not destroy packing materials until the shipment is inspected and the claim is settled.

The position of the coupling (that connects the pump shaft to the motor shaft) is set at factory specifications. No adjustment is necessary or advised. Refer to *"Motor Replacement"* in Section 6, *"Operation and Maintenance"*, for proper coupling positioning procedures.

SECTION 2.

Applications and Operating Ranges

Before installing the pump, the following checks should be made to ensure that the proper operating conditions for the pump are present.

Applications

The Series E end suction pump is a general service pump designed to pump fluids in a wide range of applications.

Acceptable fluids include:

- Hot and cold water
- Clean, thin, non-aggressive and non-explosive fluids
- Consult manufacturer for fluids containing chlorine or hydrocarbons

Operating Ranges

- Maximum fluid temperature: 212°F
- Maximum working pressure: 125 PSIG
- Maximum ambient temperature: 104°F (40°C)

Consult manufacturer for higher ambient temperature conditions.

Installation

Pump Location

The pump should be located in a dry, well ventilated area which is not subject to freezing or extreme variations in temperature. Care must be taken to ensure that the pump is mounted at least 6 inches (150mm) from any obstruction or hot surfaces. The motor requires an adequate air supply to prevent overheating and should not be totally enclosed.

For open systems requiring suction lift, the pump should be located as close to the water source as possible to reduce piping losses.

Foundation

A secure, stable mounting base should be provided for the pump in order to minimize noise and vibration in the system. It is not recommended to hang the pump unit in the system piping without added support. Bolt hole center line dimensions for the various pump types are given in Figure 1.

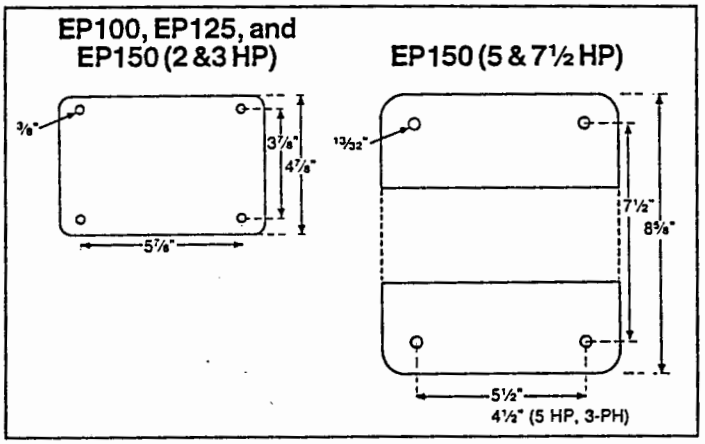

FIGURE 1: Bolt hole centers

Pipework

The use of pipe compound or Teflon® tape on all male threads is acceptable as a means of providing a positive seal at the pump port connections. Avoid using unnecessary fittings, valves or accessory items, especially in the vicinity of the pump suction and discharge ports. The piping should be adequately supported to reduce thermal and mechanical stresses on the pump.

Good installation practice recommends the system be thoroughly cleaned and flushed of all foreign materials and sediment prior to pump installation. If possible, the pump should not be installed at the lowest point in the system due to the natural accumulation of dirt and sediment. If there is excessive sediment or suspended particles present, it is advised a strainer or filter be used to prevent its entry into the pump.

Suction Pipe

The suction pipe should be adequately sized and run as straight and short as possible to keep friction losses to a minimum. This would generally dictate that the suction piping, fittings, valves and accessories be at least as large as the suction port connection of the pump. These should be larger if the distance to the water source is great.

Care should be taken to provide a means of pump isolation (e.g., gate or butterfly valves) in applications where the pump is in a pressurized or flooded suction condition.

If the pump is installed in a suction lift application, horizontal suction piping must rise gradually from the source to the pump and contain no high spots which allow air pockets to form.

Discharge Piping

It is suggested that a check valve and isolation valve be installed in the discharge pipe. Pipe, valves, and fittings should be at least the same diameter as the discharge pipe or sized in accordance with good piping practices to reduce fluid velocities and pipe friction losses. Pipe, valves and fittings must have a pressure rating equal to or greater than the maximum system pressure. Before the pump is installed, it is recommended that the discharge piping be pressure checked to at least the maximum pressure the pump is capable of generating or as required by codes or local regulations.

The standard discharge position for Grundfos Series E pumps is vertical (upward). To simplify pumping connections, however, the pump housing may be rotated to optional positions. The EP100, EP125, and EP150 (2 HP and 3 HP) models may be rotated to any of four positions while the EP150 (5 HP and 7½ HP) may be rotated to any of six positions. (See Figure 2)

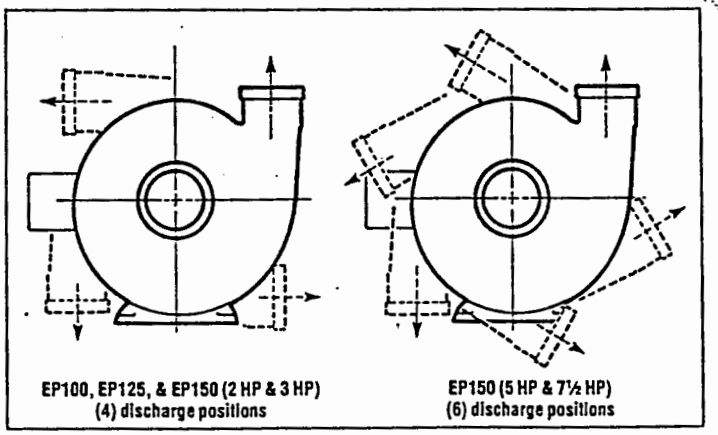

FIGURE 2: Piping connection positions (viewed from suction end)

Reposition the pump housing as follows:

1. Loosen and remove each of the cap screws that attach the pump housing to the motor adaptor.
2. Carefully lift the pump housing off of the motor adaptor and rotate it to the required position. Check that the o-ring is properly seated.
3. Apply Teflon® sealant to the cap screw threads.
4. Reinstall the cap screws and tighten diagonally and evenly.

A bypass or pressure relief valve should be installed in the discharge pipe if there is any possibility that the pump may operate against a closed valve in the discharge line. Flow through the pump is required to ensure that adequate cooling and lubrication of the pump is maintained. See Table A for minimum flow rates.

PUMP TYPE	MINIMUM FLOW RATES
EP 100 (all)	3 U.S. GPM
EP 125 (all)	4 U.S. GPM
EP 150 2020	8 U.S. GPM
EP 150 3030	10 U.S. GPM
EP 150 5050	12 U.S. GPM
EP 150 7575	13 U.S. GPM

SECTION 4.

Electrical

All electrical work should be performed by a qualified electrician In accordance with the latest edition of the National Electric Code and local codes and regulations.

WARNING

The safe operation of this pump requires that it be grounded in accordance with the National Electric Code and local governing codes or regulations. Connect the ground wire to the grounding screw in the terminal compartment and then to the **acceptable** grounding point.

Motor

Grundfos Series E pumps are supplied with 3450 RPM, O.D.P., NEMA C frame motors which have jet pump service factors. T.E.F.C. motors (with minimum 1.15 service factors) are also available. Motors have been selected to operate without exceeding their service factor ratings. Motors for other voltages and frequencies are available on a special order basis. If you are replacing the pumping unit, but using a motor supplied separately, be sure to read the "Motor Replacement" instructions in Section 6, "Operation and Maintenance" for proper adjustment of the pump shaft.

Motor Mounting Position

The motor can be mounted in any of four positions in 90° steps. To rotate the motor:

1. Remove the four bolts securing the motor to the pump.
2. Turn the motor to the desired position.
3. Replace the motor and securely tighten the four bolts.

NOTE: O.D.P. motors through 2 HP are supplied with cooling vents. These motors should remain mounted with the cooling vents positioned downward, especially where there is the possibility that liquid might splash onto the pump from above (i.e., rain).

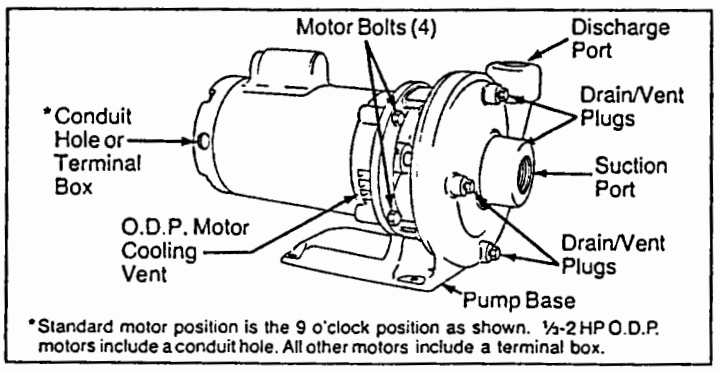

FIGURE 3: Motor mounting positions

Supply Power

Verification of the electrical supply should be made to be certain the voltage, phase, and frequency match that of the pump motor. The proper operating voltage and other electrical information can be found on the motor nameplate. These motors are designed to run on ± 10% of the nameplate rated voltage (+10% / −5% for 208 volt services).

For dual voltage motors, the motor should be internally connected to operate on the voltage closest to the 10% rating (i.e., a 208 volt motor should be wired per the 230 volt connection diagram). Wiring connection diagrams can be found on the plates attached to the motor.

WARNING: If voltage variations are larger than ± 10%, DO NOT operate the pump.

Field Wiring

Wire sizes should be based on the current carrying properties of a conductor as recommended by the latest edition of the National Electric Code or local regulations.

Direct on line (D.O.L.) starting is approved due to the extremely fast run-up time of the motor and the low moment of inertia of the pump and motor. If D.O.L. starting is not acceptable and reduced starting current is required, an auto transformer or resistant starter should be used.

It is recommended that a fused disconnect be used for each pump where service and standby pumps are installed.

Motor Protection

SINGLE-PHASE MOTORS

Single phase Series E pumps are equipped with multi-voltage, squirrel cage induction motors with built-in thermal protection.

THREE-PHASE MOTORS

Series E pumps with three-phase motors must be used with the proper size and type of motor starter to ensure the motor is protected against damage from low voltage, phase failure, current imbalance, and overloads. A properly sized starter with manual reset and ambient-compensated extra quick trip in all three legs should be used.

The overload should be sized and adjusted to the current rating of the motor. ***Under no circumstances should the overloads be set to a higher value than the service factor current shown on the motor nameplate. This will void the warranty.***

Overloads for auto transformers and resistant starters should be sized in accordance with the recommendations of the manufacturer.

Pump Start-up

Priming the Pump and Venting the System

After the pump has been installed, wired and the system filled, the following procedures should be performed. CAUTION: Do not start the pump before priming and venting the pump. Never operate the pump dry.

To prime the pump in a closed system or an open system where the water source is above the pump, close the pump isolation valve(s) and remove the topmost drain/vent plug from the front of the pump volute. Gradually open the isolation valve in the suction line until a steady stream of airless water runs out of the open plug. Replace the plug and securely tighten. Completely open the isolation valves.

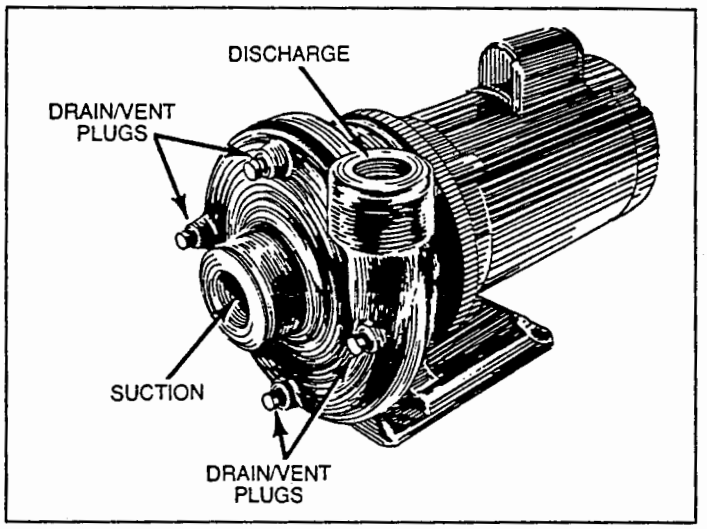

FIGURE 4: Priming the pump and venting the system

In open systems where the water level is below the pump inlet, the suction pipe and pump must be filled and vented of all air before starting the pump. This is best accomplished through the discharge port or an opening in the discharge piping at a level above the pump volute. Remove the topmost drain/vent plug. Pour water into the discharge until the suction piping and pump are completely filled. If the suction piping does not slope downward from the pump toward the water level, the air in the line must be purged while the system is being filled. Replace the drain/vent plug and securely tighten. Connect and/or seal the discharge piping.

Check Motor Rotation

1. Switch power off.
2. Check to make sure the pump has been filled and vented.
3. Rotate the pump shaft to be certain it turns freely.
4. Verify that the electrical connections are in accordance with the wiring diagram on the motor.
5. Briefly switch the power on and observe the direction of rotation. ***When viewed from the motor end, the pump should rotate CLOCKWISE.*** (NOTE: Direction of rotation on Series pumps is opposite that of Series C, L, and 7000 7000 units.)
6. To reverse the direction of rotation, first switch off the supply power.
7. On three-phase motors, interchange any two power leads on the load side of the starter. On single-phase motors, see the connection diagram on the motor and change the wiring as required.
8. Repeat step 3 to ensure that improper rotation has not unthreaded the impeller from the pump shaft.
9. Switch on the power and again check the motor for proper rotation.

Starting and Adjusting

Before starting the pump, be sure to check:

1. Pump is primed.
2. Direction of rotation is COUNTERCLOCKWISE when viewed from the suction port.
3. All piping connections are tight and pipes are adequately supported.
4. Suction line isolation valve is completely open (if valve is installed).
5. For initial starting, the isolation valve in the discharge pipe should be closed and gradually opened after the pump is turned on. Opening this valve too fast may cause water hammering in the discharge pipe. Unless the discharge valve is being used as a flow throttling device, make sure the valve is completely open.
6. Check and record the voltage and amperage of the motor. Adjust the motor overloads if required.
7. Check and record operating pressures, if pressure gauges have been installed.
8. Check all controls for proper operation. If the pump is controlled by a pressure switch, check and adjust the cut-in and cut-out pressures. If low-water-level controls are used, be sure the low-water-level switch is properly adjusted so the pump cannot run if the pump should break suction.

SECTION 6.

Maintenance

Your Grundfos Jet Star is designed to be maintenance free. Should a problem arise, see section on ***Service*** or ***Servicing and Disassembly.***

Freezing

To avoid damage that may occur because of freezing, drain pump housing and piping. To drain, disconnect pump from power and open a faucet to bleed off water pressure. After pressure is bled off, remove the drain plug. Precaution needs to be taken to ensure exposed tanks and piping are also drained.

Lubrication

Your Grundfos Jet Star uses water for lubrication and for this reason, cannot be operated dry. The motor is pre-lubricated at the factory.

SECTION 7.

Servicing and Disassembly

Warning

Before attempting any service or disassembly, shut off power to the pump and disconnect wires from the pressure switch.

Removal of Mechanical Seal

(For position numbers, refer to pages 8 & 9.)

1. Loosen the ¼" socket head bolt (position #10) on the clamp (position #8).
2. Remove clamp.
3. Carefully separate the motor/motor stool (position # 1, 2, and 25) from the pump housing (position #15).
4. Remove the motor cover on rear of motor.
5. Loosen and remove the screw that holds the capacitor strap in place.
6. By moving the capacitor aside, a 7/16" open wrench can be slid beneath the switch to engage the flats on the motor shaft.
7. With the motor shaft secured, rotate the impeller (position #6) counter-clockwise.
8. Removing the impeller will expose the shaft seal assembly (position #5).
9. Using two screwdrivers, pry off the rotating part of the shaft seal from the motor shaft.
10. The stationary part of the shaft seal can be removed with a small screwdriver.

Replacement of Mechanical Seal and O-rings

(For position numbers, refer to pages 8 & 9.)

11. Be sure the stationary seal recess on the cover plate (position #4) is clean.
12. Apply a thin coat of non-toxic oil or grease on the recess of the cover plate.
13. Gently push the stationary seal assembly into the recess of the cover plate. Be careful not to scratch or mar the face of the seal. Make sure the seal assembly is all the way into the recess.

Replacement of Seal (con't)

14. Clean the motor shaft.
15. Place the rotating assembly of the shaft seal on the motor shaft. Apply a light, thin coat of non-toxic oil or grease on the rubber cover of rotating seal assembly and along the motor shaft. Push the assembly along the motor shaft until the two shaft seal faces come into contact.
16. Using the procedure described in Step 6, secure the shaft and reinstall impeller by turning it in a clockwise direction.
17. Remove the shallow well ejector or deep well plug from the pump housing by turning the octagonal head counterclockwise.
18. Remove the guide vane from the pump housing.
20. Apply a thin coat of non-toxic oil or grease to the case o-ring. Install o-ring onto guide vane (position #13).
20. Re-install guide vane in pump housing. Check to see that the guide vane is positioned correctly so all of the ports line up.
21. Place o-ring (position #7) on guide vane. This o-ring seals between the pump housing and motor stool (position #2).
22. Reassemble the motor/motor stool and the pump housing. The discharge should be at the top.
23. Place clamp in position and tighten socket head bolt.
24. If using a pump with a shallow well ejector, slide o-rings (position #18 and #19) and gasket (position #20) over diffuser end of shallow well ejector.

    If using pump with a deep well plug, disregard o-ring (position #18) and slide the remaining o-ring and the gasket onto the deep well plug.
25. Re-install shallow well ejector or deep well plug.

for use with single phase, 60 HZ, alternating current. Use with any other type of power will cause damage to the motor. Pumps with ½ horsepower motor have installed wiring for 115 volts. Pumps with ¾ or 1 horsepower motors have wiring for 230 volts. ½, ¾, and 1 horsepower motors are dual voltage and can be changed to either 115 volt or 230 volts. Consult the motor name plate for the wiring diagram to make the voltage change.

PROPER WIRE SIZE: The selection of the proper diameter wire depends on the distance of the motor to the fuse box or meter, the horsepower of the motor and voltage. Consult Table #5 for proper wire sizing. Use a three-wire conductor as specified by local and/or national code.

MINIMUM WIRE SIZE

DISTANCE: MOTOR TO FUSE BOX OR METER	MOTOR HORSEPOWER					
	½ HP		¾ HP		1 HP	
	115 V	230 V	115 V	230 V	115 V	230 V
0 - 50 Ft.	12 GA	14 GA	12 GA	14 GA	12 GA	14 GA
50 - 100 Ft.	10 GA	14 GA	8 GA	14 GA	8 GA	14 GA
100 - 150 Ft.	8 GA	14 GA	6 GA	14 GA	6 GA	14 GA
150 - 200 Ft.	8 GA	14 GA	6 GA	12 GA	6 GA	12 GA
200 - 300 Ft.	6 GA	12 GA	6 GA	10 GA	6 GA	10 GA

Table #5

Warning

All wire and fuse sizings are recommendations only. Local codes must be followed.

PROPER FUSE SIZING

MOTOR HORSEPOWER:		½ HP	¾ HP	1 HP
STANDARD	115V	30	45	50
	230V	15	25	25
DELAY	115V	10	15	17.5
	230V	5	7	8

Table #6

or separate circuit which is protected by a fuse or circuit breaker. In addition, a disconnect switch should be visible and near the pump. See Table #6 to properly size the fuses. Never by-pass a blown fuse in an attempt to reinstate the power.

WIRE CONNECTIONS TO PRESSURE SWITCH: Connect the two incoming power wires to the line terminals in the pressure switch. See Figure #7. Connect the grounding wire to the green grounding screw on the bottom of the pressure switch. Grounding of the pump is essential for your protection and the protection of the motor. The wires from the pressure switch to the motor are factory installed.

Warning

Ensure pump is properly grounded.

WIRING OF PRESSURE SWITCH

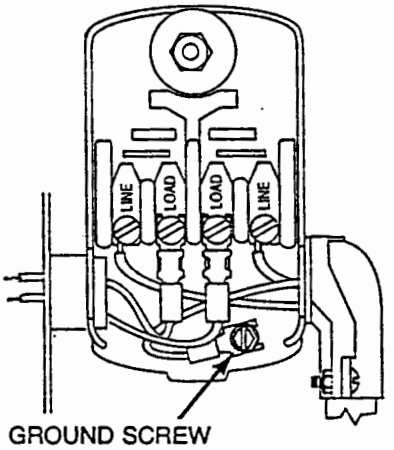

Figure #7

The pressure switch is pre-set at the factory and should not require additional adjustment. If adjustment is necessary, consult the chart that is provided in the pressure switch.

SECTION 5.

Start Up

Warning

– DO NOT RUN PUMP DRY –

Before turning on the power to the pump, the pump must be primed. If the pump is run before it is primed, damage may occur. To prime the pump and piping, remove the priming plug at the user installed "T" or control valve. Pour water into the pump housing until the chamber is full of water and free of air.

Shallow Well Start-Up

For a shallow well installation, close all the faucets down stream from the pump. Turn the pump on. Depending on the depth of the water in the well, it may take a few minutes for the pump to build pressure. It may be necessary to repeat the priming procedure if water is not obtained within a few minutes. When the pressure is obtained, open a faucet near the pump to allow any debris to exit the piping. Continue to run the pump until the water is clear.

Deep Well Start-Up

For a deep well installation, close all the faucets down stream except for one. The open faucet will allow air in the piping to escape when the pump begins to operate. Turn the control valve on the pump to the OFF position. Turn the pump on. As pressure begins to build, open the control valve until the pressure gauge fluctuates wildly and the pump starts to make noise. Close the valve a small amount until the gauge regains normal operation. Continue to run the pump until the water is clear.

priming, fill the piping with water prior to completing the installation. The vertical piping should be supported to prevent the pump housing from carrying the weight of vertical piping.

DISCHARGE PIPING: To avoid excessive friction loss the discharge pipe leading from the pump to the house should be sized according to Table #4. Failure to do so, will cause the pressure to be less than expected. Prime the pump through the unused port in the control valve. When priming is complete this port should be plugged.

DISCHARGE PIPING FOR DEEP WELL INSTALLATION (from pump to house)

PUMP SIZE	PIPE SIZE 1"	PIPE SIZE 1¼"
½ HP	5-30 Ft.	30-100 Ft.
¾ HP	5-25 Ft.	25-100 Ft.
1 HP	5-20 Ft.	20-70 Ft.

Table #4

PRIMING: To prime the pump and piping, remove the plug from the control valve at the pump discharge. Pour water into the pump housing until the chamber is full of water and free of air.

PRIMING OF DEEP WELL INSTALLATION

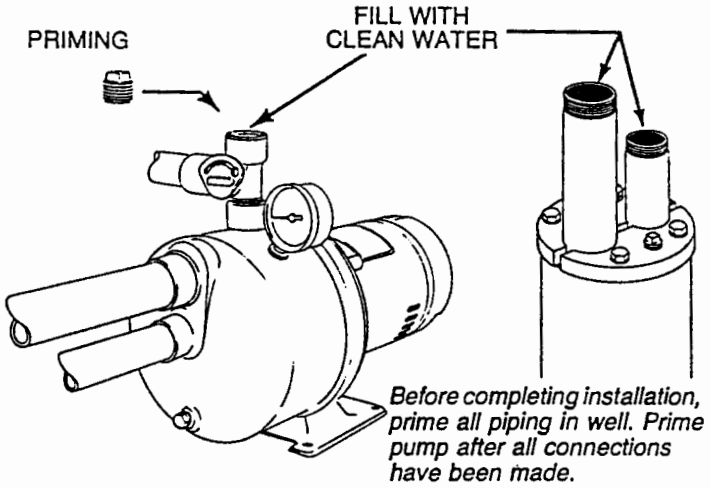

Figure #5

CONTROL VALVE: On all deep well installations a control valve is required. Based on the water pumping level, the control valve will need to be adjusted to assure the optimum performance of the pump. Adjust the control valve in the following manner:

1. Loosen the screw on the side of the valve.
2. Ensure the pump is completely primed. (See instructions.)
3. Start pump
4. Open the valve slowly until the performance of the pump is noticeably reduced and the pressure reading on the gauge is also reduced. Close valve until the performance is regained.
5. Tighten the screw.

CONTROL VALVE

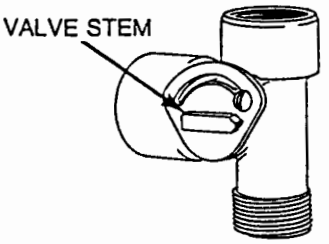

Figure #6

Tank Installation

Two types of tanks are in wide use. The standard pneumatic tank and the captive air or bladder tank. Either of these two tanks will perform well with your Grundfos Jet Star.

STANDARD PNEUMATIC TANK: A Standard Pneumatic tank has a volume of air that is compressed and in direct contact with the water. The volume of air is ejected into the tank by an air-charging system which is connected from the pump to the tank. It will be necessary to install an air volume control valve for air charging. (See Installation instructions with valve).

CAPTIVE AIR OR BLADDER TANK: A Captive air or bladder tank has a volume of air that is compressed and separated from the water by a flexible diaphragm. Because air cannot escape from the tank, an air charging system is not required. Check the air precharged pressure in the tank before filling. This pressure should be the same as the minimum pump cut-in pressure.

PRESSURE SWITCH: Your Grundfos Jet Star has a factory installed pressure switch. The switch has a cut in pressure of 30 psi and a cut out pressure of 50 psi.

SECTION 4.

Electrical Installation

Before starting your Electrical Installation, consult your local electrical code. All wiring should meet local and/or national codes. Failure to follow codes may result in damage to the motor. For your own personal protection, use extreme caution when dealing with electrical power.

Warning

Before starting the wiring installation be sure power is disconnected.

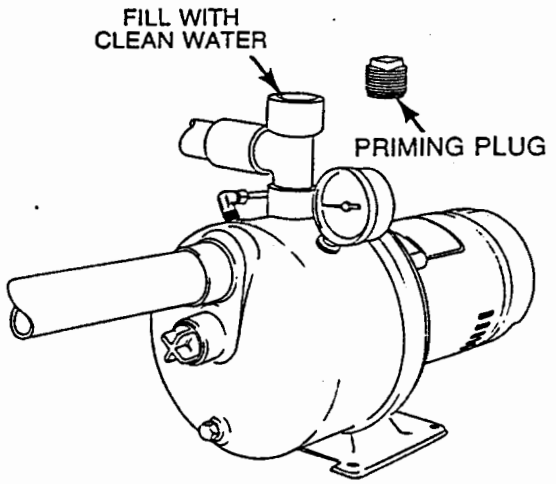

Figure #2

Deep Well Installation Procedure

Your deep well installation should be very similar to that shown in Figure #3.

DEEP WELL INSTALLATION

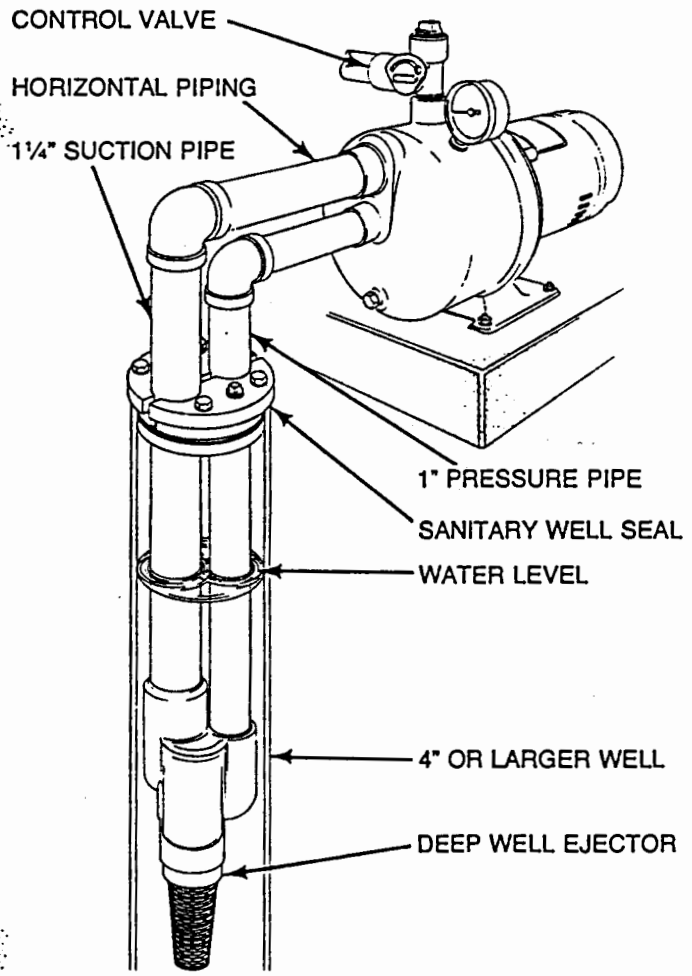

Figure #3

to the well as possible to avoid excessive friction loss. The pump should be enclosed in a basement, shed, or pump house.

In addition, the pump should be located on a firm foundation and in an area that will not experience flooding or severe weather. The pump should have proper ventilation. If freezing is a possible problem, protective measures should be taken.

CONVERSION KIT: To adapt the Grundfos Jet Star from a shallow well installation to a deep well installation, the ejector must be removed and replaced with the deep well plug as in figure #4.

CONVERSION KIT INSTALLATION

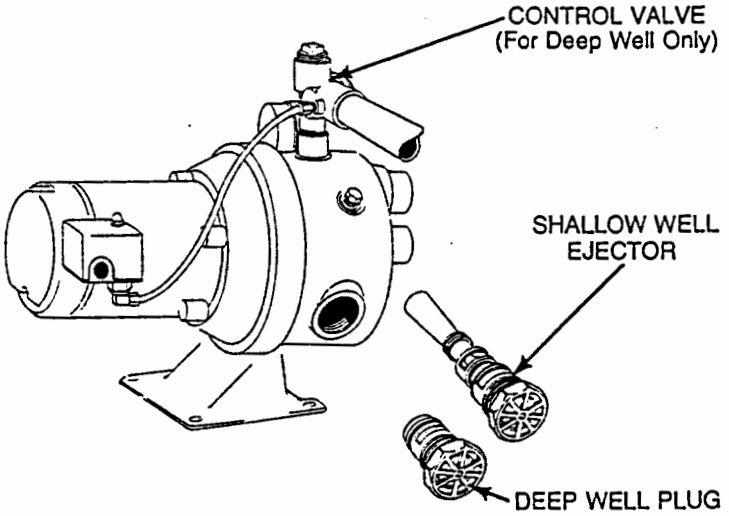

Figure #4

HORIZONTAL PIPING: Horizontal piping should be as short as possible to keep the friction loss to a minimum. Use Table #3 to obtain the proper piping size for the suction and pressure piping. The piping from the well to the pump should slope toward the well at a rate of at least 1 (one) inch per every 10 (ten) feet of piping run.

HORIZONTAL PIPING SIZING
FOR DEEP WELL INSTALLATION
(from well to pump)

DISTANCE: WELL TO PUMP	½ HP		¾ HP		1 HP	
	SUCT.	PRESS.	SUCT.	PRESS.	SUCT.	PRESS.
0-25 Ft.	1¼	1	1¼	1	1¼	1
25-50 Ft.	1¼	1¼	1½	1¼	1½	1¼
50-75 Ft.	1¼	1¼	1½	1½	1½	1½
75-100 Ft.	1½	1¼	1½	1½	2	1½
100-150 Ft.	1½	1½	2	1½	2½	2

Table #3

The pump has a 1 inch pressure port and a 1¼ inch suction port. If rigid piping is used, unions may be needed to ease in the connection to the pump. Two unions may be required and would need to be staggered from each other.

VERTICAL PIPING: The vertical piping should be long enough to allow the ejector to be submerged at least 10 feet below the water pumping level. The pressure piping should be 1 inch in diameter and the suction piping should be 1¼ inches in diameter. Screw the first lengths of piping into the ejector. Lower the ejector and piping into the well. Continue to assemble piping until proper depth is obtained. To aid in

Installation Procedure

Shallow or Deep Well – A shallow well has a pumping water level of 25 feet or less. A deep well has a pumping water level of greater than 25 feet. With the use of the deep well conversion kit, the Grundfos Jet Star can be used in either shallow or deep well applications. ***Depending on the pumping water level, one of the following two installation procedures should be followed:***

Shallow Well Installation Procedure

Your shallow well installation should be very similar to that shown in Figure #1.

PUMP LOCATION: The location of the pump should be as close to the well site as possible to avoid excessive friction loss. The pump should be enclosed in a basement, shed, or pump house.

SHALLOW WELL INSTALLATION

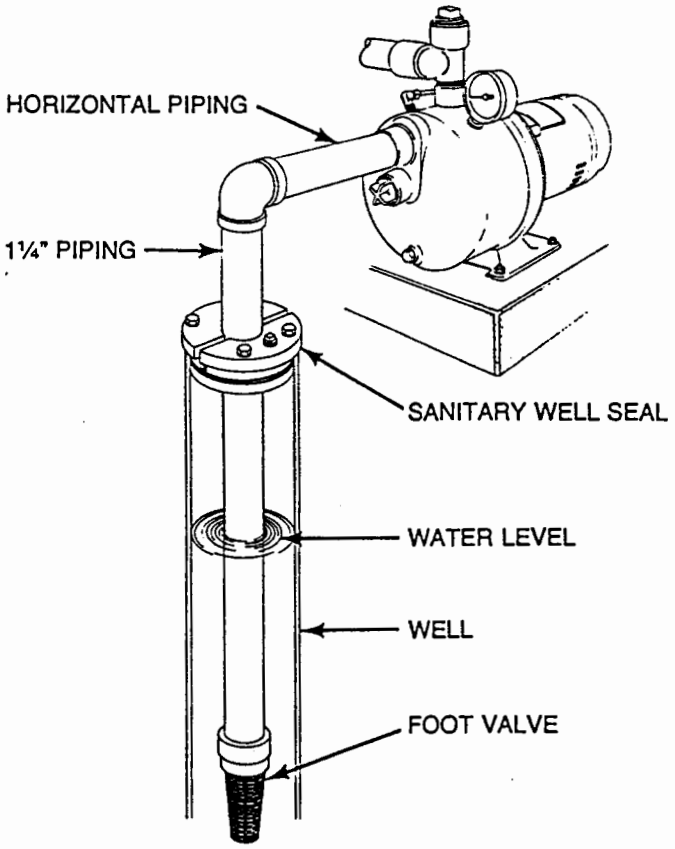

Figure #1

In addition, the pump should be located on a firm foundation and in an area that will not experience flooding or severe weather. The pump should have proper ventilation. If freezing is a possible problem, protective measures should be taken.

HORIZONTAL PIPING: Use Table #1 for the proper sizing of piping from the pump to the well site. The piping from the pump to the well site should slope toward the well at a rate of at least 1 (one) inch for every 10 (ten) feet of horizontal run. If the distance from the well to the pump is greater than 40 feet, a check valve should be installed near the pump. If rigid piping is used, it may be necessary to install a union in the piping from the well to the pump to make the connection easier.

HORIZONTAL PIPING SIZING FOR SHALLOW WELL INSTALLATION (from well to pump)

PUMP SIZE	PIPE SIZE 1¼"	PIPE SIZE 1½"
½ HP	Up to 150 Ft.	150 - 300 Ft.
¾ HP	Up to 100 Ft.	100 - 200 Ft.
1 HP	Up to 50 Ft.	50 - 100 Ft.

Table #1

VERTICAL PIPING: The vertical piping should be 1¼" in diameter and free of high points in which air could be trapped. The vertical piping should be long enough to allow the foot valve to be submerged at least 3 feet below the water pumping level. The vertical piping should be supported to prevent the pump housing from carrying the weight of the piping.

FOOT VALVE: A 1¼" foot valve should be installed on the end of the vertical piping. The foot valve should be at least two feet from the bottom of the well.

DISCHARGE PIPING: To avoid excessive friction loss, the discharge piping leading from the pump to the house should be sized according to Table #2. Failure to do so will cause the pressure to be less than expected. A plugged "T" should be installed at the discharge for priming of the pump.

DISCHARGE PIPING FOR SHALLOW WELL INSTALLATION (from pump to house)

PUMP SIZE	PIPE SIZE 1"	PIPE SIZE 1¼"
½ HP	5 - 30 Ft.	30 - 100 Ft.
¾ HP	5 - 25 Ft.	25 - 100 Ft.
1 HP	5 - 20 Ft.	20 - 70 Ft.

Table #2

PRIMING: To prime the pump and piping, remove the plug from the user installed "T" at the pump discharge. Pour water into the pump housing until the chamber is full of water and free of air.

Installation and Operating Instructions

GRUNDFOS JET STAR

Your Grundfos Jet Star is of the utmost quality. Combined with a properly constructed installation, the Grundfos Jet Star will give you many years of reliable service.

To ensure the proper installation of the pump carefully read the complete manual before attempting to install the pump.

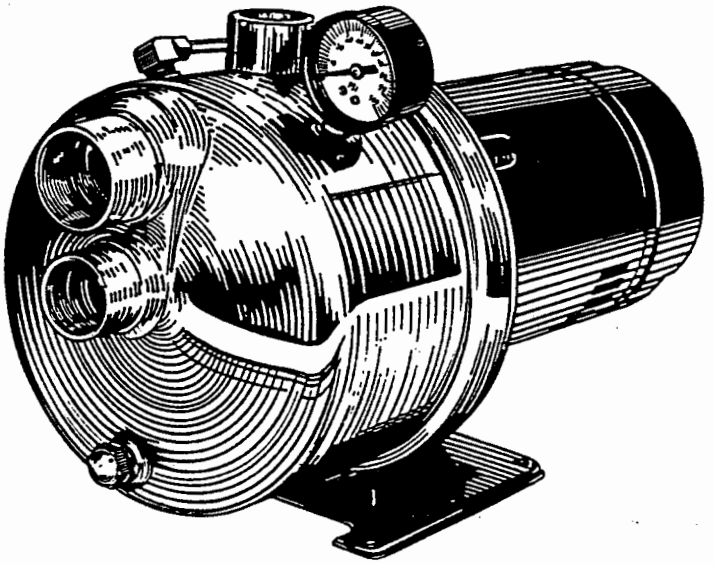

SECTION 1.

Shipment Inspection

Examine the pump carefully to make sure damage has not occurred during shipment. If damage is detected, report it to your Grundfos Dealer. Prior to installation, the pump should remain in its carton to ensure its protection.

SECTION 2.

Pre-Installation Checklist

Before beginning the installation procedures, the following checks should be made:

☑ **STATE AND LOCAL CODES:** Consult state and local sanitary codes on the proper equipment necessary to prevent contamination of your well. These codes are for your safety and protection.

☑ **MOTOR VOLTAGE, PHASE AND FREQUENCY:** The motor voltage, phase and frequency indicated on the motor nameplate should be checked against the available power supply. If the motor voltage does not correspond, a voltage change can be made in the field by following the wiring diagram on the motor nameplate.

☑ **WATER PUMPING LEVEL:** Obtain the pumping water level in your well. This information is necessary to determine what installation configuration to use. The water pumping level is the level of water within the well when the pump is operating.

☑ **OPERATING CONDITIONS:** Maximum working pressure is 85 psi. Maximum fluid temperature is 95°F.

Installation and Operating Instructions

TABLE OF CONTENTS

Section 1
Shipment Inspection . . . . . Page 1

Section 2
Pre-Installation Checklist . . . . . Page 1

Section 3
Installation Procedure . . . . . Page 1
- Shallow Well Installation Procedure 2
- Deep Well Installation Procedure 3
- Tank Installation 4

Section 4
Electrical Installation . . . . . Page 4

Section 5
Start-Up . . . . . Page 5
- Shallow Well Start-Up 5
- Deep Well Start-Up 5

Section 6
Maintenance . . . . . Page 6
- Freezing 6
- Lubrication 6

Section 7
Servicing and Disassembly . . . . . Page 6
- Removal of Mechanical Seal 6
- Replacement of Seal, O-rings & Seal Ring 6
- Removal and Replacement of Motor 7

Section 8
Service Guide . . . . . Page 7
- If Motor Will Not Start 7
- If Pump Runs But Does Not Deliver Water or Pressure 7
- If Pump Won't Shut-Off 7
- If Pump Starts and Stops Too Often 7
- Jet Star Components 8

Installation and Operating Instructions

Grundfos Jet Star

GRUNDFOS®

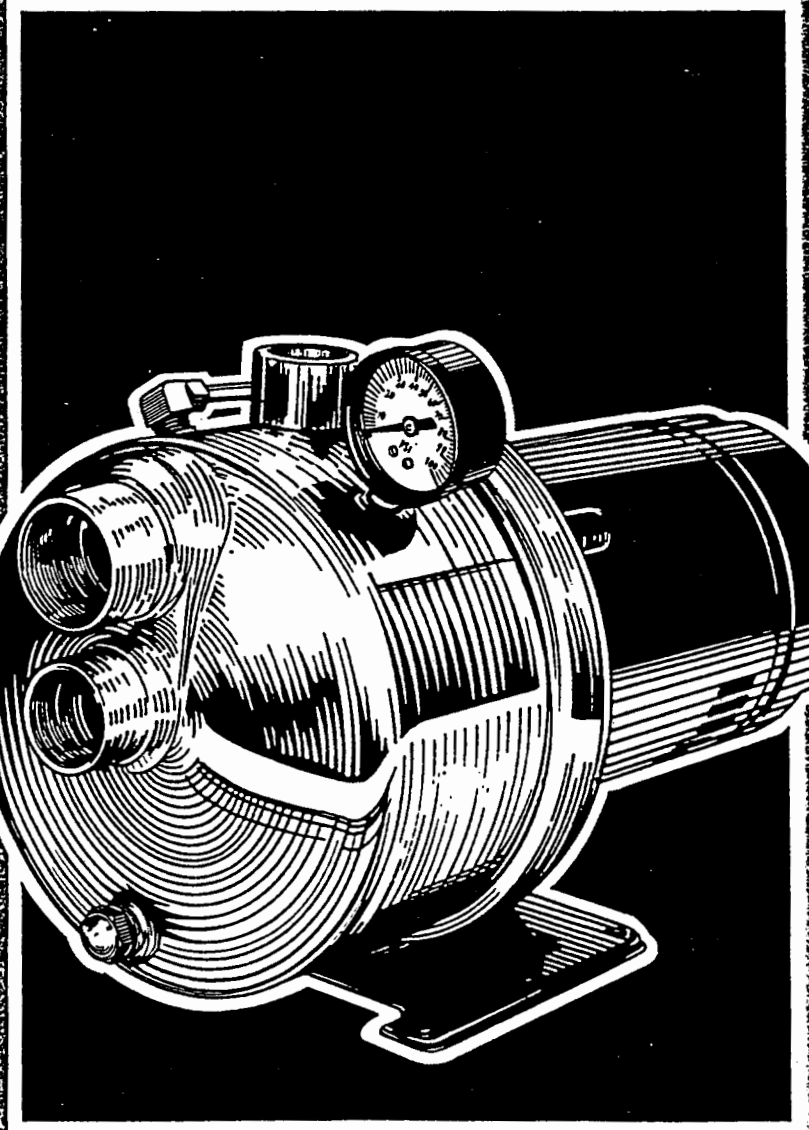

1. Shipment Inspection Page 1
2. Pre-Installation Checklist Page 1
3. Installation Procedure Page 2
4. Electrical Installation Page 5
5. Start-Up Page 6
6. Maintenance Page 6
7. Service and Disassembly Page 6
8. Service Guide Page 7

Please leave these instructions with the pump.

Section 10
Individual Component Manufacturer's Manuals

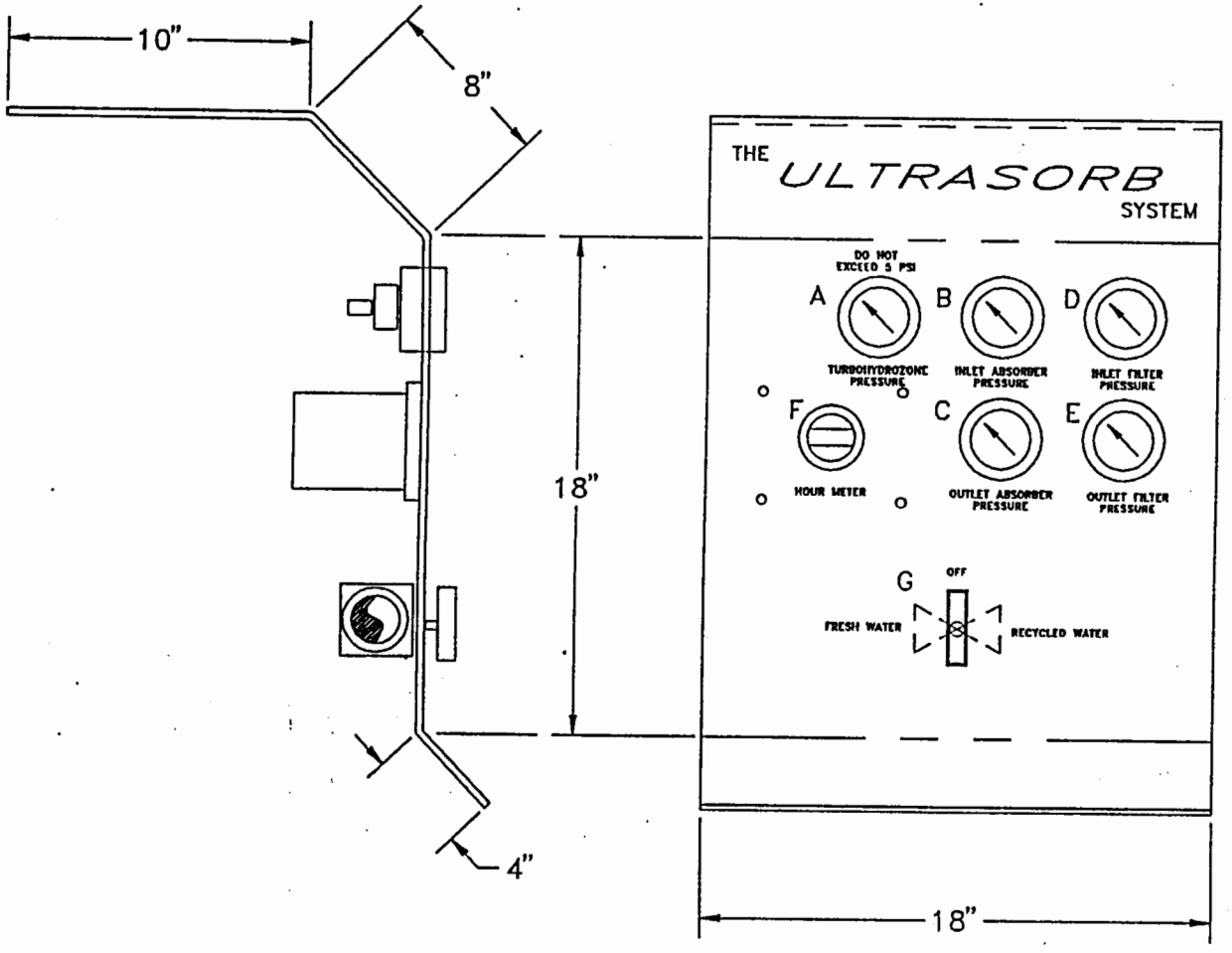

ITEM	DESCRIPTION
	PRESSURE GAUGES
A	TURBOHYDROZONE
B	ABSORBER INLET
C	ABSORBER OUTLET
D	FILTER INLET
E	FILTER OUTLET
	METERS
F	HOUR METER
	VALVES
G	RECYCLED/FRESH WATER (3-WAY)

NOTES:

RGF Environmental Systems

A MEMBER OF THE R G F GROUP

REVISIONS	BY

TITLE

RGF ULTRASORB®
MODEL SM
CONTROL PANEL

©COPYWRITE RGF INC. 1994

DRAWN BY
CHRIS WILLETTE

DRAWING NO.
SM-1F

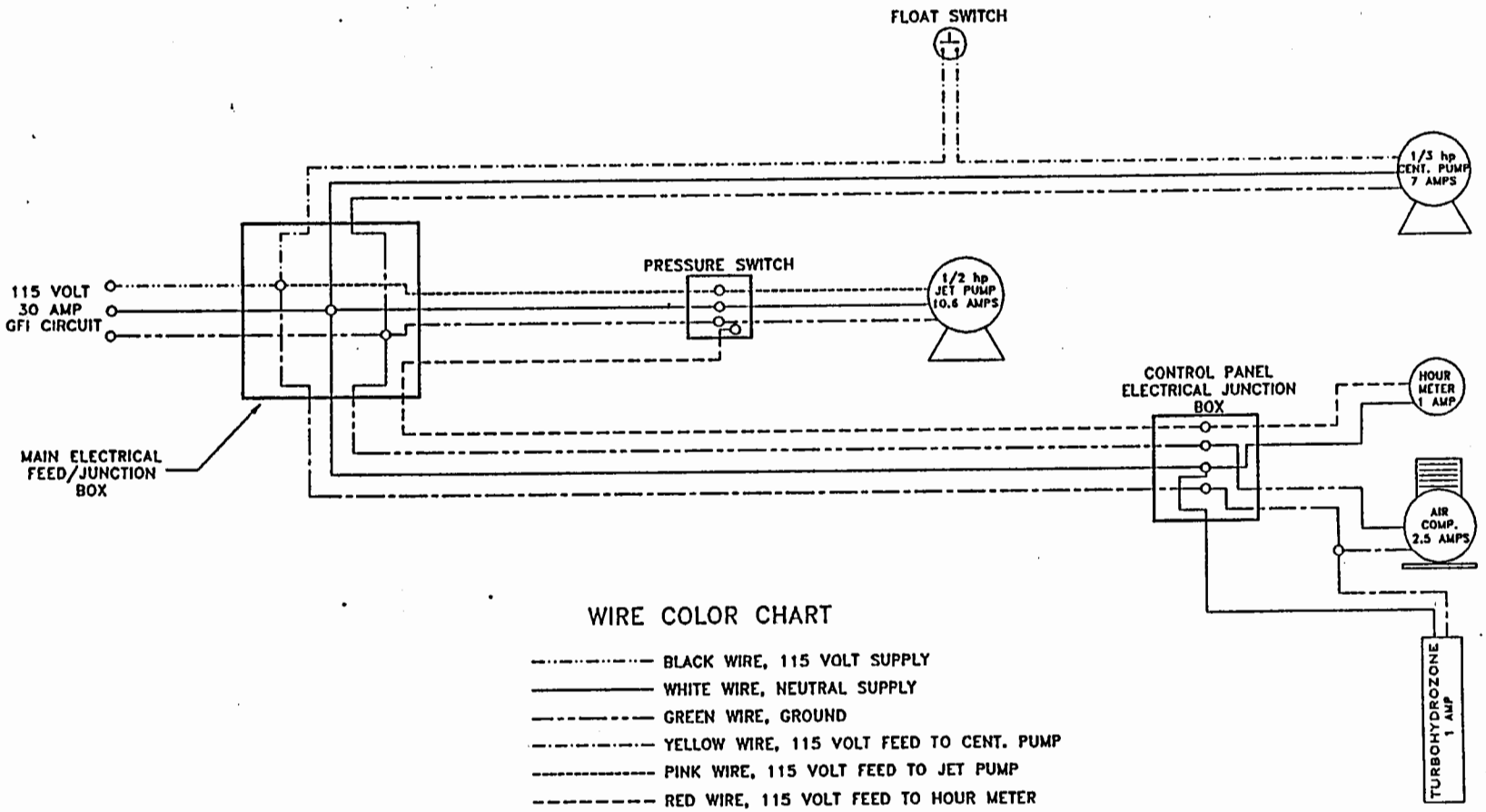

WIRE COLOR CHART

- BLACK WIRE, 115 VOLT SUPPLY
- WHITE WIRE, NEUTRAL SUPPLY
- GREEN WIRE, GROUND
- YELLOW WIRE, 115 VOLT FEED TO CENT. PUMP
- PINK WIRE, 115 VOLT FEED TO JET PUMP
- RED WIRE, 115 VOLT FEED TO HOUR METER
- PURPLE WIRE, 115 VOLT FEED TO AIR COMP./TURBOHYDROZONE

NOTES:

RGF Environmental Systems Inc.
A MEMBER OF THE RGF ENVIRONMENTAL GROUP

REVISIONS	BY
7/27/94	CW

TITLE
RGF ULTRASORB®
MODEL SM
ELECTRICAL DIAGRAM

© COPYWRITE RGF INC. 1994

DRAWN BY
CHRIS WILLETTE

DRAWING NO.
SM-1E

ITEM	DESCRIPTION
A	TURBOHYDROZONE PRESSURE
B	FILTER INLET PRESSURE
C	FILTER OUTLET PRESSURE
D	ABSORBER INLET PRESSURE
E	ABSORBER OUTLET PRESSURE
F	RECYCLED/FRESH WTR. VALVE (3 WAY)

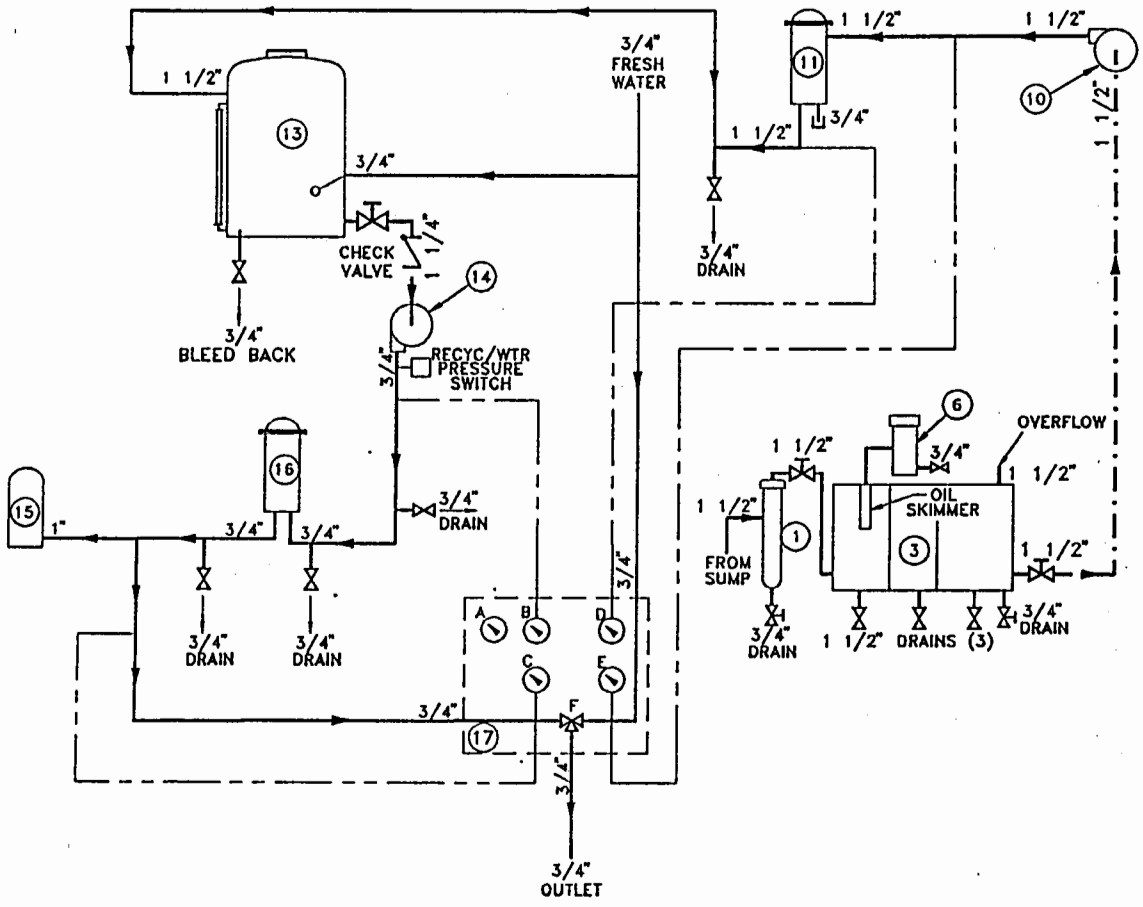

PRESSURE LINES, 3/8" DIA. POLYETHYLENE TUBING.

WATER LINES, PVC, SCH. 40.

RUBBER SUCTION HOSE, WIRE REINFORCED, 1 1/2" DIA.

FOR DESCRIPTION OF NUMBERED ITEMS SEE SHEET #1.

NOTES:

RGF Environmental Systems Inc.

A MEMBER OF THE RGF ENVIRONMENTAL GROUP

REVISIONS	BY
7/27/94	CW

TITLE

RGF ULTRASORB®
MODEL SM
PIPING AND INSTRUMENTATION DIAGRAM

© COPYWRITE RGF INC. 1994

DRAWN BY	DATE
CHRIS WILLETTE	8/18/93
DRAWING NO.	SHEET NO
SM-1D	4 OF 6

ITEM	PIPE CONNECTION TYPE
A	1 1/2" THREADED PVC SCH. 40
B	1 1/2" SLIP PVC SCH. 40
C	3/4" THREADED PVC SCH. 40
D	3/4" SLIP PVC SCH. 40

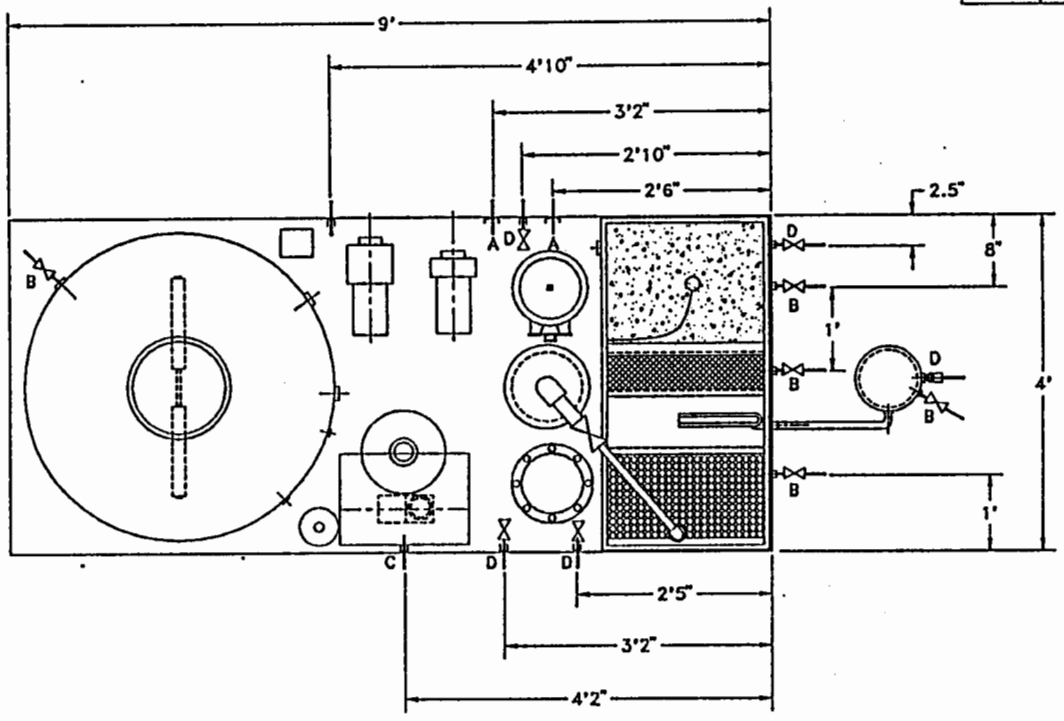

PLAN VIEW

NOTES:

RGF Environmental Systems Inc.
A MEMBER OF THE RGF ENVIRONMENTAL GROUP

REVISIONS	BY
7/27/94	CW

TITLE
RGF ULTRASORB®
MODEL SM
DIMENSIONS AND PIPE FITTINGS
©COPYWRITE RGF INC. 1994

DRAWN BY	DATE
CHRIS WILLETTE	8/12/93
DRAWING NO.	SHEET NO
SM-1C	3 OF 6

GENERAL NOTES:

1. ALL PIPING SHALL BE PVC
2. FOR PIPING AND INSTRUMENTATION DIAGRAM SEE SHEET #4
3. FOR CONTROL PANEL DETAIL SEE SHEET #6
4. HIDDEN LINES ON VIEW B INDICATE INTERNAL LAYOUT OF SERIES I TANK
5. HYDROCARBON ACCUMULATOR NOT PICTURED IN VIEW B
6. MULTIMEDIA FILTER NOT PICTURED IN VIEW B

CONTINUED FROM SHEET #1

ITEM	QTY	DESCRIPTION
13	1	500 gal. POLY TANK
14	1	1/2 hp JET PUMP
15	1	PRESSURE TANK
16	1	POLISHING FILTER
17	1	CONTROL PANEL
18	1	TURBOHYDROZONE
19	1	MACRO AERATOR
20	1	OZONE AIR COMPRESSOR
21	1	4' x 9' SKID
22	1	ELECTRICAL JUNCTION BOX

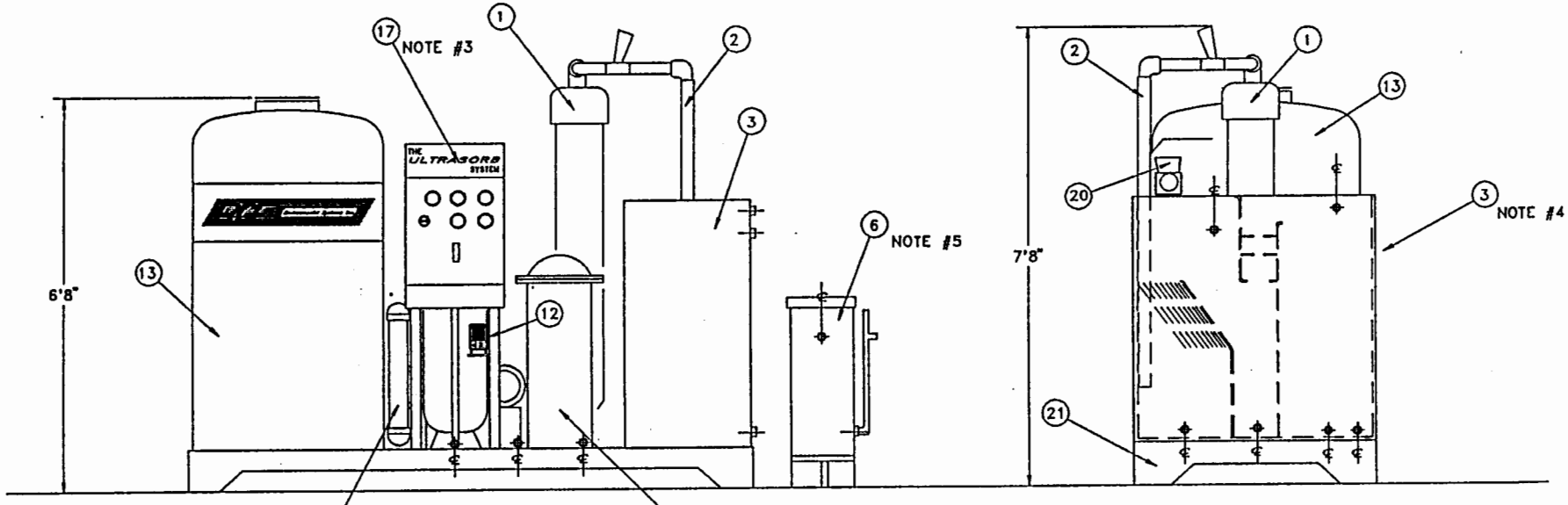

VIEW A/1

VIEW B/1

NOTES:

RGF Environmental Systems Inc.
A MEMBER OF THE RGF ENVIRONMENTAL GROUP

REVISIONS	BY
7/27/94	CW

TITLE
RGF ULTRASORB®
MODEL SM
ELEVATION VIEW

© COPYWRITE RGF INC. 1994

DRAWN BY	DATE
CHRIS WILLETTE	08/16/9
DRAWING NO.	SHEET NO
SM-1B	2 OF

FOR GENERAL NOTES SEE SHEET #2

SECTION OR VIEW — A/2 — SHEET NO.

ITEM	QTY	DESCRIPTION
1	1	CENTRIFUGAL SEPARATOR
2	1	AERATION TOWER
3	1	SERIES I TANK 4'H x 4'L x 2'W
4	1	INCLINE TUBE COALESCER
5	1	OIL SKIMMER
6	1	HYDROCARBON ACCUMULATOR
7	1	FILTER MATRIX
8	1	MULTIMEDIA FILTER BED
9	1	FLOAT SWITCH
10	1	1/3 hp CENT. PUMP
11	1	HYDROCARBON ABSORBER
12	1	CHEMICAL INJECTION PUMP

•••• FOR CONTINUATION OF MATERIAL LIST SEE SHEET #2 ••••

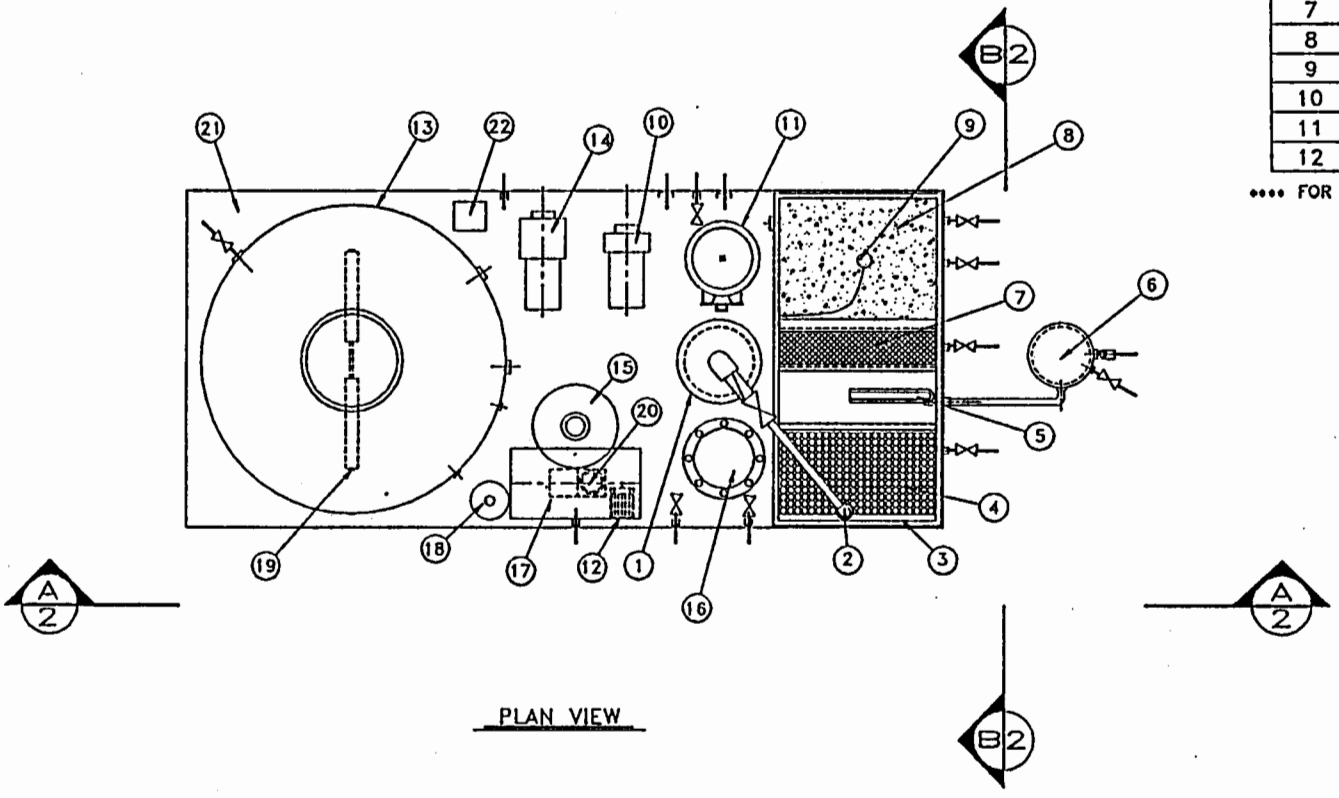

PLAN VIEW

NOTES:

RGF Environmental Systems Inc.
A MEMBER OF THE RGF ENVIRONMENTAL GROUP

REVISIONS	BY
7/27/94	CW

TITLE
RGF ULTRASORB®
MODEL SM
PLAN VIEW
© COPYWRITE RGF INC. 1994

DRAWN BY	DATE
CHRIS WILLETTE	8/12/93
DRAWING NO. SM-1A	SHEET NO. 1 OF 6

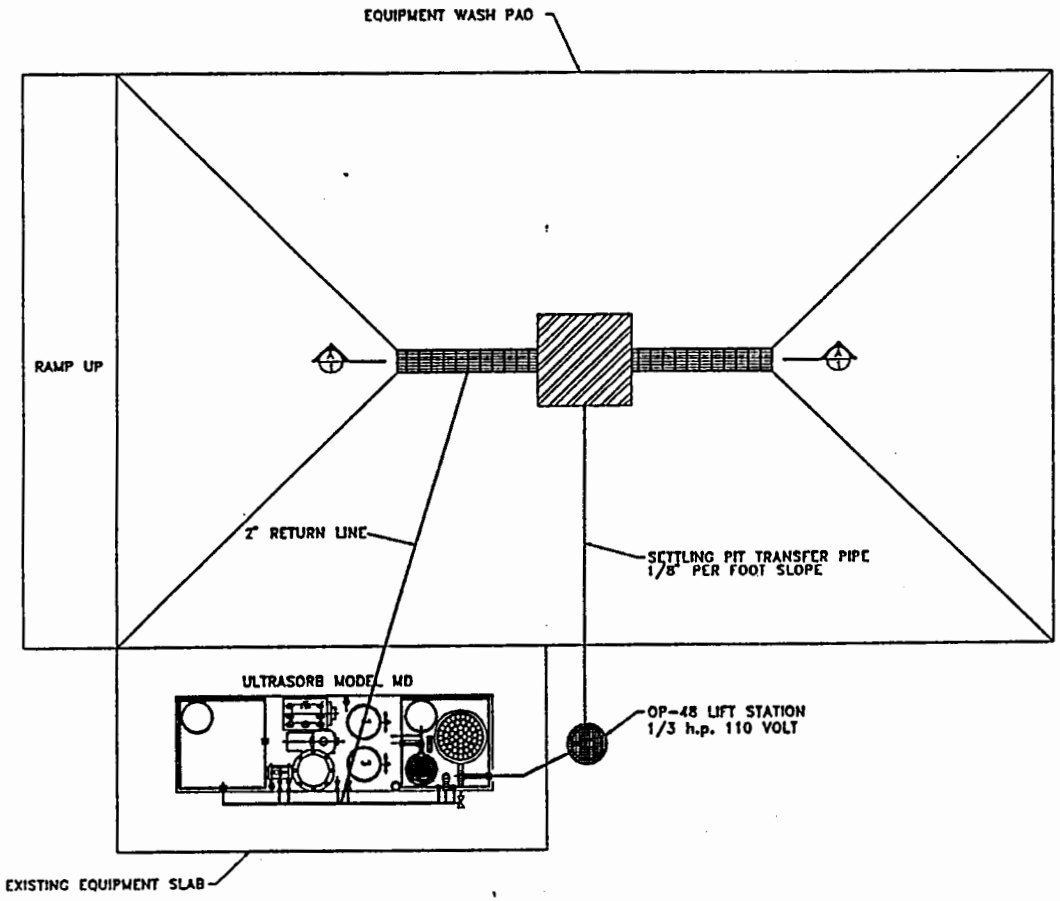

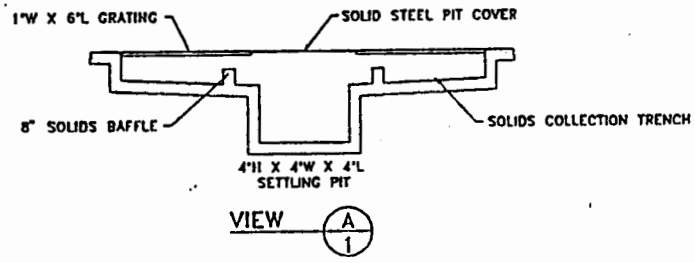

GENERAL NOTES:

WASH AND EQUIPMENT PADS WILL BE COVERED BY AN APPROPRIATE ROOF

OP-48 LIFT STATION SIDE VIEW

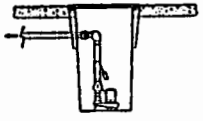

NOTES:

Environmental Systems Inc.

A MEMBER OF THE ROF ENVIRONMENTAL GROUP

REVISIONS	BY

TITLE

ULTRASORB®

MODEL MD

CUSTOM WASH PAD DESIGN

DRAWN BY	DATE
CHRIS WILLETTE	6/01/94
DRAWING NO.	SHEET NO.
KEVINPAD	

Operation and Maintenance

Operation

When Grundfos Series E centrifugal pumps are installed in accordance with these instructions and sized for correct performance, they will operate efficiently and provide years of service. The pumps are water lubricated and do not require any external lubrication or inspection. The motors will require periodic lubrication as noted in the following maintenance information.

Under no circumstances should the pump be operated for any prolonged periods of time without flow through the pump. This can result in motor and pump damage due to overheating. A properly sized relief valve should be installed to allow sufficient water to circulate through the pump to provide adequate cooling and lubrication of the pump bearings and seals.

Pump cycling should be checked to ensure the pump is not starting more than 20 times per hour on ½ HP to 5 HP models or 15 times per hour on 7½ HP models. Rapid cycling is a major cause of premature motor failure due to increased heat build-up in the motor. If necessary, adjust controls to reduce the frequency of starts and stops.

FREEZE PROTECTION

If the pump is installed in an area where freezing could occur, the pump and system should be drained during freezing temperatures to avoid damage. To drain the pump, close the isolation valves and remove the drain/vent plugs at both the top and bottom of the pump volute. DO NOT replace the plugs until the pump is to be used again.

Maintenance

MOTOR LUBRICATION

Electric motors are pre-lubricated at the factory and do not require additional lubrication at start-up. Motors containing sealed bearings do not require additional lubrication during the first 15,000 hours of operation. Motors with grease fittings should ONLY be lubricated with a lithium based grease.

TABLE B: Recommended lubrication

TYPE OF SERVICE	FREQUENCY OF GREASING
Seasonal (Motor is idle for more than 6 months)	Yearly
Intermittent	Semi-annually
Continuous	Quarterly

Approved Types of Greases

Shell Dolium R, FSSO Beacon 3, BP-XRB2, Shell Alvania 3, Mobil Grease 2, Texaco Regal, and Starfos Premium

DO NOT over grease the bearings. Over greasing will cause increased bearing heat and can result in bearing and/or motor failure.

At regular intervals, depending on the conditions and time of operation, the following checks should be made:

1. Pump meets required performance and is operating smoothly and quietly.
2. There are no leaks, particularly at the shaft seal.
3. The motor is not overheating.
4. Remove and clean all strainers or filters in the system.
5. Verify the tripping of the motor overload protection.
6. Check the operation of all controls. Check unit control cycling twice and adjust if necessary.
7. If the pump is not operated for unusually long periods, the unit should be maintained in accordance with these instructions. In addition, if the pump is not drained, the pump shaft should be manually rotated or run for short periods of time at monthly intervals.

If the pump fails to operate or there is a loss of performance, refer to Section 7, "Troubleshooting".

Motor Replacement

If the motor is damaged as a result of bearing failure, burning, or electrical failure, the following instructions detail how to remove the motor for replacement. It must be emphasized that motors used on Series E pumps are specifically selected to our rigid specifications. ***Replacement motors must be of the same NEMA C frame size and have the same service factor.*** Failure to follow these recommendations may result in premature motor failure.

DISASSEMBLY

1. Using the proper allen wrench, loosen the cap screw(s) in the coupling.
2. With the correct size wrench, loosen and remove the four bolts which hold the motor to the discharge section of the pump end motor support.
3. Move the motor straight back until the shaft is free from the coupling.

ASSEMBLY

1. Thoroughly clean the surfaces of the motor and pump end mounting flanges.
2. Set the motor on the pump end.
3. Place the terminal box in the desired position by rotating the motor. (NOTE: Refer to "Motor Mounting Positions" in Section 4, "Electrical", for the recommended mounting position for ⅓ HP through 2 HP O.D.P. motors.)
4. Insert the mounting bolts, then tighten diagonally and evenly.
5. Using a large screwdriver, raise the pump shaft by placing the tip of the screwdriver under the coupling collar of the pump shaft. Then, carefully move the shaft toward the motor until the impeller contacts the motor support and will move no further.
6. Now insert the appropriate spacing tool (see below) between the motor support and shaft coupling collar and allow the pump shaft to move back into the pump end until the collar bottoms on the spacing tool. Tighten the allen screw(s) in the motor keyway. This will position the impeller in the correct axial location. (See Figures 5A, B, & C)
7. Be certain the pump shaft can be rotated by hand. If the shaft cannot be rotated or it binds, repeat steps 5 and 6.

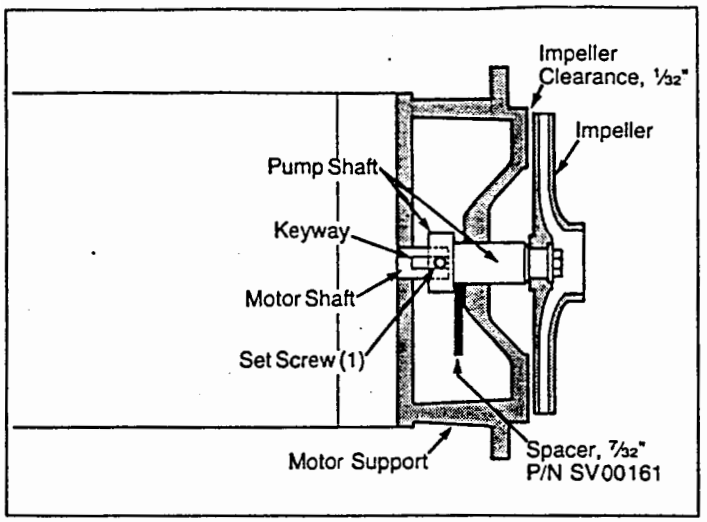

FIGURE 5A: Pump assembly (EP100 and EP125)

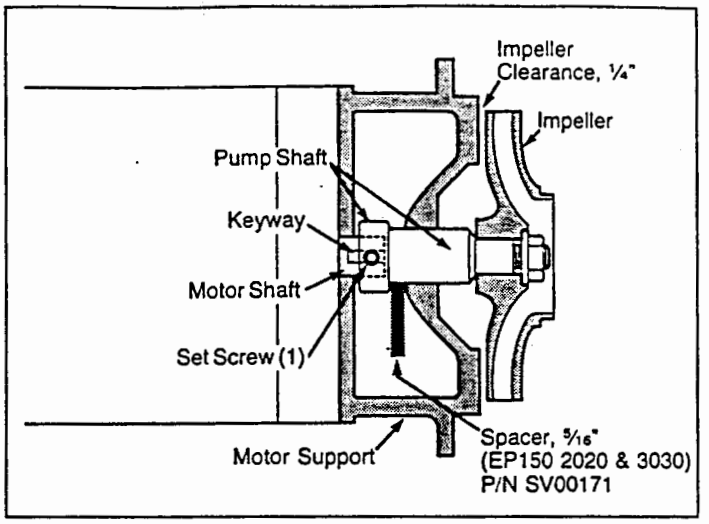

FIGURE 5B: Pump assembly (EP150 2020 & 3030)

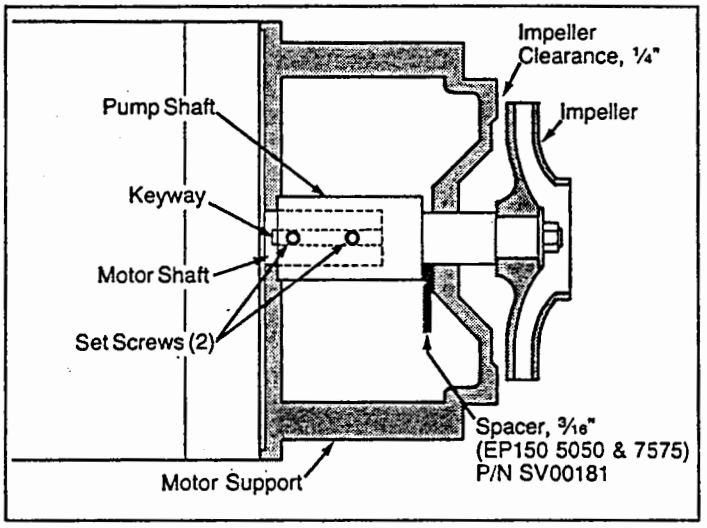

FIGURE 5C: Pump assembly (EP150 5050 & 7575)

TABLE C: Spacing Tool Selection

PUMP MODEL(S)	SPACING TOOL PART NO.	SPACING TOOL LENGTH	IMPELLER DISTANCE TO MOTOR SUPPORT
EP 100 (all)	SV 00 161	7/32" (5.6 mm)	1/32" (.80 mm)
EP 125 (all)	SV 00 161	7/32" (5.6 mm)	1/32" (.80 mm)
EP 150 (2020 & 3030)	SV 00 171	5/16" (7.9 mm)	1/4" (6.35 mm)
EP 150 (5050 & 7575)	SV 00 181	3/16" (4.8 mm)	1/4" (6.35 mm)

Troubleshooting

WHEN WORKING WITH ELECTRICAL CIRCUITS, USE CAUTION TO AVOID ELECTRICAL SHOCK. It is recommended that rubber gloves and boots be worn, and metal terminal boxes and motors be properly grounded before any work is done.

WARNING: Failure to ground the pump may result in serious electrical shock.

Preliminary Tests

SUPPLY VOLTAGE 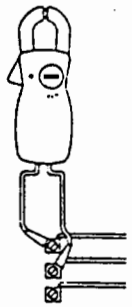	**How to Measure** Use a volt meter (set to proper scale) to measure the voltage at the pump terminal box or starter. On single-phase units, measure between power leads L1 and L2 (or L1 and N for 115 volt units). On three-phase units, measure between: • Power leads L1 and L2 • Power leads L2 and L3 • Power leads L3 and L1	**What It Means** When the motor is under load, the voltage should be within ± 10% of the nameplate voltage. Larger voltage variation may cause winding damage. Large variations in the voltage indicate a poor electrical supply and the pump should not be operated until these variations have been corrected. If the voltage constantly remains high or low, the motor should be changed to the correct supply voltage.
CURRENT MEASUREMENT 	**How to Measure** Use an ammeter (set on the proper scale) to measure the current on each power lead at the terminal box or starter. See the motor nameplate for amp draw information. Current should be measured when the pump is operating at constant discharge pressure.	**What It Means** If the amp draw exceeds the listed service factor amps (SFA) or if the current imbalance is greater than 5% between each leg on three-phase units, check the following: 1. Burned contacts on the motor starter. 2. Loose terminals in starter or terminal box or possible wire defect. 3. Too high or too low supply voltage. 4. Motor windings are shorted or grounded. Check winding and insulation resistances. 5. Pump is damaged causing a motor overload.
INSULATION RESISTANCE 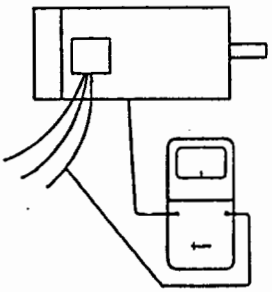	**How to Measure** Turn off power and disconnect the supply power leads in the pump terminal box. Using an ohm or mega ohm meter, set the scale selector to Rx 100K and zero adjust the meter. Measure and record the resistance between each of the terminals and ground.	**What It Means** Motors of all HP, voltage, phase and cycle duties have the same value of insulation resistance. Resistance values for new motors must exceed 1,000,000 ohms. If they do not, the motor should be repaired or replaced.

Troubleshooting Chart

FAULT	POSSIBLE CAUSES	HOW TO CHECK	HOW TO CORRECT
A. Pump Does Not Run	1. No power at motor.	Check for voltage at motor terminal box.	If no voltage at motor, check feeder panel for tripped circuits and reset circuit.
	2. Fuses are blown or circuit breakers are tripped.	Turn off power and remove fuses. Check for continuity with ohm meter.	Replace blown fuses or reset circuit breaker. If new fuses blow or circuit breaker trips, the electrical installation, motor, and wires must be checked.
	3. Motor starter overloads are burned or have tripped out.	Check for voltage on line and load side of starter.	Replace burned heaters or reset. Inspect starter for other damage. If heater trips again, check the supply voltage and starter holding coil.
	4. Starter does not energize.	Energize control circuit and check for voltage at the holding coil.	If no voltage, check control circuit fuses. If voltage, check holding coil for shorts. Replace bad coil.
	5. Defective controls.	Check all safety and pressure switches for operation. Inspect contact in control devices.	Replace worn or defective parts or controls.
	6. Motor is defective.	Turn off power and disconnect wiring. Measure the lead to lead resistances with the ohm meter (RX-1). Measure lead to ground values with ohm meter (RX-100K). Record measured values.	If an open or grounded winding is found, remove the motor and repair or replace.
	7. Defective capacitor (single-phase motors)	Turn off power and discharge capacitor. Check with ohm meter (RX-100K).	When the meter is connected to the capacitor, the needle should jump towards "0" ohms and slowly drift back to infinity. Replace capacitor if defective.
	8. Pump is bound	Turn off power and manually rotate pump shaft.	If shaft does not rotate easily, check coupling setting and adjust as necessary. If shaft rotation is still tight, remove pump and inspect. Disassemble and repair.
B. Pump Runs But at Reduced Capacity or Does Not Deliver Water.	1. Wrong rotation.	Check wiring for proper connections.	Correct wiring.
	2. Pump is not primed or is airbound.	Turn pump off, close isolation valves(s), and remove the priming plug. Check fluid level.	Refill the pump, replace the plug, and start the pump. Long suction lines must be filled before starting the pump
	3. Strainer, check valve, or foot valve is clogged.	Remove strainer, screen or valve and inspect.	Clean and replace. Reprime the pump.
	4. Suction lift is too large.	Install compound pressure gauge at the suction side of the pump. Start pump and compare reading to performance data.	Reduce suction lift by lowering the pump, increasing the suction line size, or removing high friction loss devices.
	5. Suction and/or discharge piping leaks.	Pump runs backwards when turned off. Air in suction pipe.	Suction pipe, valves, and fittings must be airtight. Repair any leaks and retighten all loose fittings.
	6. Pump is worn.	Install pressure gauge, start pump, gradually close the discharge valve and read pressure at shut-off	Convert PSI to feet (Measured PSI x 2.31 ft. / PSI = ____ ft.) Refer to the specific pump curve for shut-off head for that pump model. If head is close to curve, pump is probably OK. If not, remove pump and inspect.
	7. Pump impeller or connection port is clogged.	Disassemble and inspect pump passageways.	Remove any foreign materials found.

FAULT	POSSIBLE CAUSES	HOW TO CHECK	HOW TO CORRECT
C. Pump Cycles Too Much	1. Pressure switch is not properly adjusted or is defective.	Check pressure setting on switch and operation. Check voltage across closed contacts.	Readjust switch or replace if defective.
	2. Level control is not properly set or is defective.	Check setting and operation.	Readjust setting (refer to level control manufacturer's data). Replace if defective.
	3. Insufficient air charging or leaking tank or piping.	Pump air into tank or diaphragm chamber. Check diaphragm for leak. Check tank and piping for leaks with soap and water solution. Check air to water volume.	Repair as necessary.
	4. Tank is too small	Check tank size and air volume in tank. Tank volume should be approximately 10 gallons for each gpm of pump capacity. The normal air volume is ⅔ of the total tank volume at the pump cut-in pressure.	Replace tank with one of correct size.
	5. Pump is oversized.	Install pressure gauges on or near pump suction and discharge ports. Start and run pump under normal conditions, record gauge readings.	Convert PSI to feet (Measured PSI x 2.31 ft. / PSI = _____ ft.) Refer to the specific pump curve for that model. Ensure that total head is sufficient to limit pump delivery within its design flow range. Throttle pump discharge flow if necessary.
D. Fuses Blow or Circuit Breakers or Heaters Trip	1. Low voltage.	Check voltage at starter panel and motor.	If voltage varies more than ±10%, contact power company. Check wire sizing.
	2. Starter overloads are set too low.	Cycle pump and measure amperage.	Increase heater size or adjust trip setting to a maximum of motor nameplate (full load) current.
	3. Three phase current is imbalanced.	Check current draw on each lead to the motor.	Must be within ±5%. If not, check motor and wiring. Rotating all leads may eliminate this problem.
	4. Motor is shorted or grounded.	Turn off power and disconnect wiring. Measure the lead-to-lead resistance with an ohm meter (RX-1). Measure lead-to-ground values with an ohm meter (RX-100K) or a megaohm meter. Record values.	If an open or grounded winding is found, remove the motor, repair and/or replace.
	5. Wiring or connections are faulty.	Check proper wiring and loose terminals.	Tighten loose terminals. Replace damaged wire.
	6. Pump is bound.	Turn off power and manually rotate pump shaft.	If shaft does not rotate easily, check coupling setting and adjust as necessary. If shaft rotation is still tight, remove pump and inspect. Disassemble and repair.
	7. Defective capacitor (single-phase motors).	Turn off the power and discharge the capacitor. Check with ohm meter (RX-100K).	When the meter is connected to the capacitor, the needle should jump toward "0" ohms and slowly drift back to infinity. Replace if defective.
	8. Motor overloads at higher ambient temperature than motor.	Use a thermometer to check the ambient temperature near the overloads and motor. Record these values	If ambient temperature at motor is lower than at the overloads, especially where temperature at overloads is above 104°F (40°C), ambient compensated heaters should replace standard heaters.

LIMITED WARRANTY

Products manufactured by GRUNDFOS PUMPS CORPORATION (GRUNDFOS) are warranted to the original user only to be free of defects in material and workmanship for a period of 18 months from date of installation, but not more than 24 months from date of manufacture. GRUNDFOS' liability under this warranty shall be limited to repairing or replacing at GRUNDFOS' option, without charge, F.O.B. GRUNDFOS' factory or authorized service station, any product of GRUNDFOS manufacture. GRUNDFOS will not be liable for any costs of removal, installation, transportation, or any other charges which may arise in connection with a warranty claim. Products which are sold but not manufactured by GRUNDFOS are subject to the warranty provided by the manufacturer of said products and not by GRUNDFOS' warranty. GRUNDFOS will not be liable for damage or wear to products caused by abnormal operating conditions, accident, abuse, misuse, unauthorized alteration or repair, or if the product was not installed in accordance with GRUNDFOS' printed installation and operating instructions.

To obtain service under this warranty, the defective product must be returned to the distributor or dealer of GRUNDFOS products from which it was purchased together with proof of purchase and installation date, failure date, and supporting installation data. Unless otherwise provided, the distributor or dealer will contact GRUNDFOS or an authorized service station for instructions. Any defective product to be returned to GRUNDFOS or a service station must be sent freight prepaid; documentation supporting the warranty claim and/or a Return Material Authorization must be included if so instructed.

GRUNDFOS WILL NOT BE LIABLE FOR ANY INCIDENTAL OR CONSEQUENTIAL DAMAGES, LOSSES, OR EXPENSES ARISING FROM INSTALLATION, USE OR ANY OTHER CAUSES. THERE ARE NO EXPRESS OR IMPLIED WARRANTIES, INCLUDING MERCHANTABILITY OR FITNESS FOR A PARTICULAR PURPOSE, WHICH EXTEND BEYOND THOSE WARRANTIES DESCRIBED OR REFERRED TO ABOVE.

Some jurisdictions do not allow the exclusion or limitation of incidental or consequential damages and some jurisdictions do not allow limitations on how long implied warranties may last. Therefore, the above limitations or exclusions may not apply to you. This warranty gives you specific legal rights and you may also have other rights which vary from jurisdiction to jurisdiction. GRUNDFOS PUMPS CORPORATION, 2555 Clovis Avenue, Clovis California 93612, telephone number (209) 292-8000.

GRUNDFOS®

GRUNDFOS Pumps Corp. • 2555 Clovis Ave. • Clovis, CA 93612
Support Centers: Allentown, PA • Atlanta, GA • Mississauga, Ontario, Canada

L-EP-TL-002	9/26/91
PRINTED IN USA	

THOMAS INDUSTRIES INC.
POWER AIR DIVISION
1419 Illinois Avenue, Sheboygan, WI 53082
(414) 457-4891

MODEL NUMBERS: 900-13-58 & 900-13-59

Read and understand the following information and instructions included with this product before using. This information is for your safety and to prevent damage to this product.

⚠ CAUTION: To reduce risk of electrical shock . . .

1. Do not disassemble. Disassembly or attempted repairs if accomplished incorrectly can create electrical shock hazard. Refer servicing to qualified service agencies only.
2. If this plug is supplied with a three pronged plug, connect unit to a properly grounded outlet only.

⚠ WARNING: To reduce risk of electrocution . . .

1. This product should never be left unattended when plugged in.
2. Always unplug this product immediately after using and store in dry place.
3. Do not use this product in or near area where it can fall or be pulled into water or other liquids.
4. Do not reach for this product if it has fallen into liquid. Unplug immediately.
5. Never operate this product outdoors in the rain or in a wet area.

⚠ DANGER: To reduce risk of explosion or fire . . .

1. Do not use this product in or near explosive atmospheres or where aerosol (spray) products are being used.
2. Do not pump anything other than atmospheric air.
3. Do not pump combustible liquids or vapors with this product or use in or near an area where flammable or explosive liquids or vapors may exist.
4. Do not use this product near flames.

⚠ CAUTION: To prevent injury . . .

1. Close supervision is necessary when this product is used near children or invalids. Never allow children to operate the unit.
2. Never operate this product if it has a damaged cord or plug. If it is not working properly. If it has been dropped or damaged. Or if it has fallen into water, return the product to a service center for examination and repair.
3. Keep the cord away from heated surfaces.
4. Never block any air openings (inlet) of this product or place it on a soft surface where the openings may be blocked. Keep all air openings free of lint, dirt and other foreign objects.
5. Never use while sleeping or drowsy.
6. Never drop or insert fingers or any other object into any openings.
7. Do not operate this product where oxygen is being administered.
8. This unit may be thermally protected and can automatically restart when the protector resets. Always disconnect power source before servicing.
9. Wear safety glasses or goggles when operating this product.
10. Use only in well ventilated areas.
11. Do not use any tools or attachments without first determining maximum air pressure for that tool or attachment.
12. Never point any air nozzle or air sprayer toward another person or any part of the body.
13. All electrical products generate heat. To avoid serious burns never touch unit during or immediately after operation.

Failure to observe the above safety precautions could result in severe bodily injury, including death in extreme cases.

SAVE THESE INSTRUCTIONS

Warning: Power Air compressors are precision-made, and carefully assembled and wired. Therefore do not disassemble or attempt to repair these products. Only qualified personnel should perform repair service.

IMPORTANT NOTICE TO PURCHASER: WARRANTY AND EXCLUSIVE REMEDIES

Power Air's finished OEM products, when properly installed and under normal conditions of use, are warranted by Power Air to be free from defects in material and workmanship at time of shipment. Warranty claims regarding OEM limited products must be asserted within 13 months (the "warranty period") from date of manufacture encoded on the product (unless otherwise agreed in writing or specified in a Power Air OEM Quotation). The customer's exclusive remedy against Power Air, for a warranty claim or otherwise, shall be limited to repair or replacement of the subject OEM finished product if it is shown to have been defective in material and workmanship at time of shipment, and then only if the claim is asserted during the warranty period. Power Air's maximum liability under this exclusive remedy shall never exceed the cost of the subject product and Power Air reserves the right, at its sole discretion, to refund the purchase price in lieu of repair or replacement. Except for such warranty and exclusive remedy as stated (and except for the express warranty of title) POWER AIR DISCLAIMS ALL OTHER WARRANTIES WITH RESPECT TO ITS OEM FINISHED PRODUCTS, WHETHER IMPLIED, AND SPECIFICALLY DISCLAIMS THE IMPLIED WARRANTIES OF MERCHANTABILITY AND FITNESS FOR A PARTICULAR PURPOSE. IN NO EVENT SHALL POWER AIR BE LIABLE TO CUSTOMER OR THIRD PARTIES IN WARRANTY, CONTRACT, NEGLIGENCE, STRICT LIABILITY, OR OTHERWISE, FOR ANY DAMAGES, WHETHER INCIDENTAL OR CONSEQUENTIAL, WHICH ARE ALLEGED TO HAVE BEEN CAUSED BY ONE OR MORE OF OUR PRODUCTS, BEYOND THE COST TO THE CUSTOMER OF THE SUBJECT PRODUCT OR PRODUCTS. THE EXCLUSIVE REMEDY FOR ANY CLAIM HAVING BEEN LIMITED TO REPAIR OR REPLACEMENT AS AFORESAID.

Because Power Air's OEM warranties and remedies extend only to our direct customers, the customer is not authorized to extend warranties on our behalf to anyone. Unauthorized extensions of warranties by the customer shall remain customer's responsibility.

CUSTOMER IS RESPONSIBLE FOR DETERMINING THE SUITABILITY OF OUR PRODUCTS FOR CUSTOMER'S USE OR RESALE, OR FOR INCORPORATING THEM INTO OBJECTS OR FOR APPLICATIONS WHICH CUSTOMER DESIGNS, ASSEMBLES, CONSTRUCTS OR MANUFACTURES

The dependable air line.™

©1992 Thomas Industries Inc. Printed in U.S.A.
All Rights Reserved

MODEL 900-13-59
DRAWING & PARTS LIST

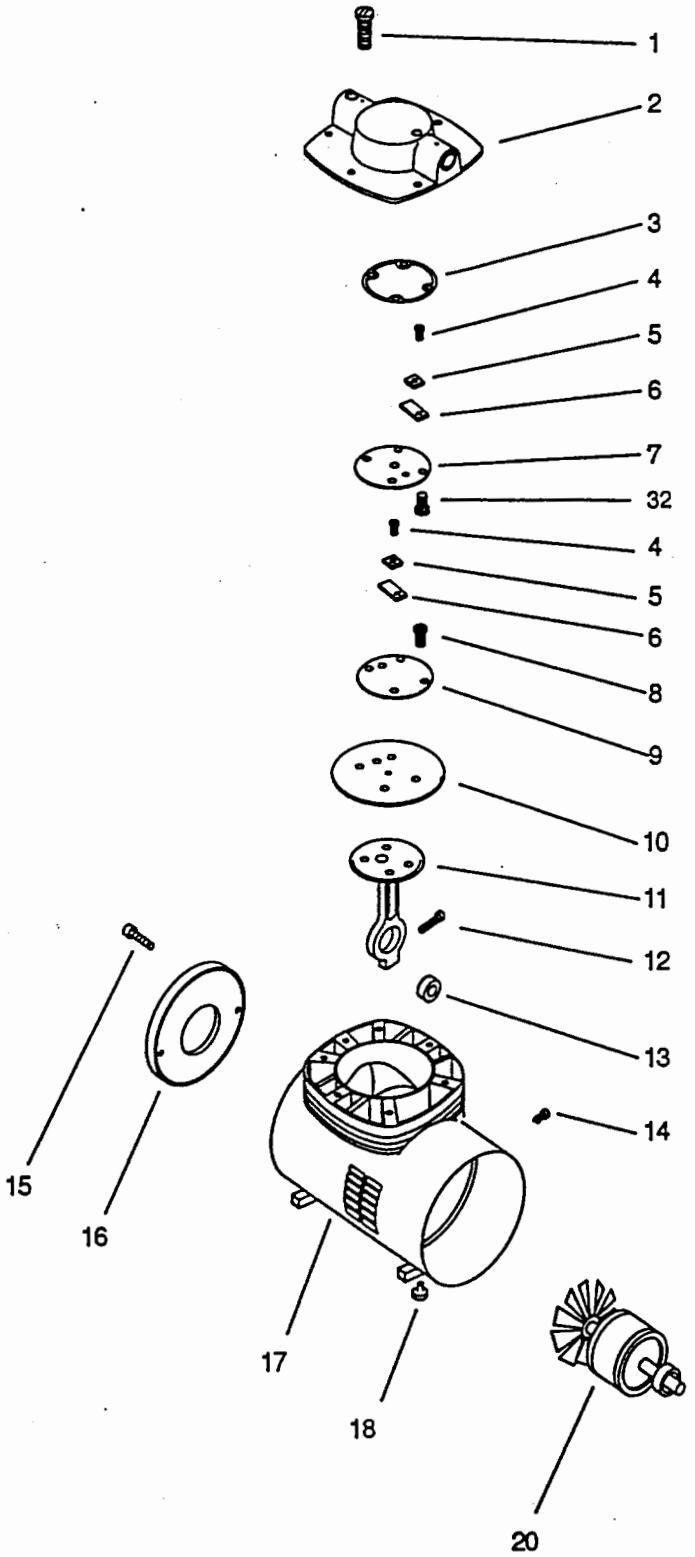

Item No.	Part No.	Description	Qty.
1	625444	Head Screw	6
2	661643-504	Head	1
3	638061	Head Gasket	1
4	625160	Flapper Valve Screw	2
5	617045	Valve Keeper Strip	2
6	621102	Flapper Valve	2
7	621101	Exhaust Valve Plate	1
8	625141	Valve Plate Screw - Intake	4
9	656128	Intake Valve Plate	1
10	608212	Diaphragm	1
11	607215	Connecting Rod	1
12	625114	Connecting Rod Capscrew	1
13	646022	Connecting Rod Bearing	1
14	622012	Plug Button	1
15	625337	Front Cover Screw	2
16	614159-504	Front Cover	1
17	661819-504	Housing	1
18	624244	Rubber Bumper	4
20	602904	Shaft, Rotor & Fan Brg. Assembly	1
21	608104	Stator 115V 60Hz	1
22	626509	Stator Screw Lockwasher	2
23	625157	Stator Screw	2
24	614574-504	Motor End Cap Assembly	1
25	633222	Strain Relief	1
26	625108	Motor End Capscrew	2
27	607034	Insulated Connector	2
28	633328	Cord	1
29	614551	Bearing Cover	1
30	624160	Adaptor - Ground (Not Shown)	1
31	607002	Hose Connector (Not Shown)	1
32	625606	Valve Plate Screw - Exhaust	4

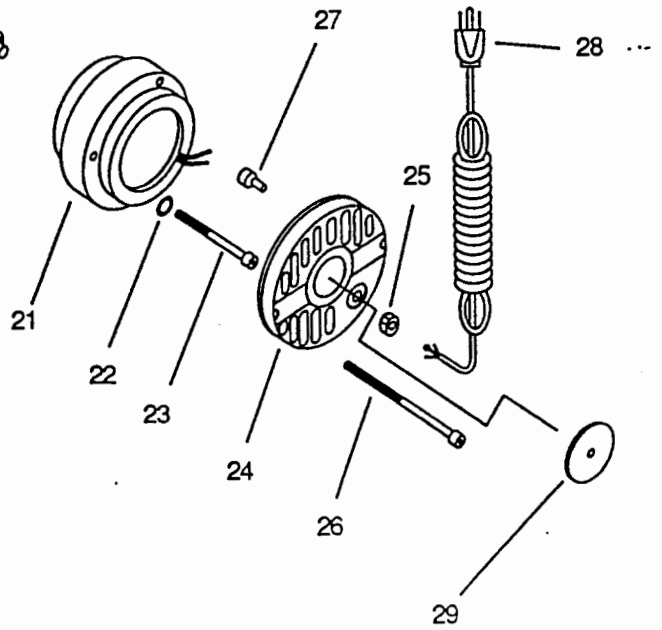

When Ordering Or Corresponding With Us About Parts Or Unit Always Give The Following Information:
1. Model No. of Unit
2. The Part Number
3. The Part Name

MINIATURE AIRLINE FILTER

THE ARO CORPORATION
BRYAN, OHIO 43506 U.S.A.

1/8" & 1/4" PIPE SIZES
PRIMARY PRESSURE: 200 PSI MAX. (14 BAR MAX.)
TEMPERATURE RANGE: 0° to 125°F (-18°C to 52°C)

MODEL NO.

125121-000 K93

REV. 2/84

NOTICE: READ THIS MANUAL CAREFULLY BEFORE OPERATING, INSTALLING OR SERVICING THIS EQUIPMENT.

WARNING:

1. Do not exceed the pressure or temperature ratings of this unit as specified.
2. The polycarbonate plastic used for the bowl can be weakened (and possibly fail) if exposed internally or externally to certain solvents and other chemicals or their vapors and fumes. Therefore **DO NOT EXPOSE** to acetone, trichloroethane, gasoline, alcohols, ketones, esters, chlorinated hydrocarbons, toluene, etc.
3. Lubricating oils used in plastic bowls must be compatible with polycarbonate plastics. (some "fire resistant" oil additives are not compatible). Fumes of these substances in contact with polycarbonate bowls internally or externally can also damage bowl. Consult Aro catalog or The Aro Corporation, Bryan, Ohio 43506 for comprehensive listings of harmful chemicals and compatible lubricating oils. If questions arise, request Form No. 4424.
4. Shut-off and relieve air supply before disassembling unit.

INSTALLATION:

Install filter upstream from regulator and lubricator and as close as possible to tool, cylinder, or pneumatic device. The filter must be installed with the air flow through the unit in the direction as indicated by the arrow on the base.

MAINTENANCE:

Shut-off and relieve air supply before disassembling unit. Periodically, the bowl should be removed and cleaned. Replace filter element if necessary. Wash bowl only with warm water or kerosene.

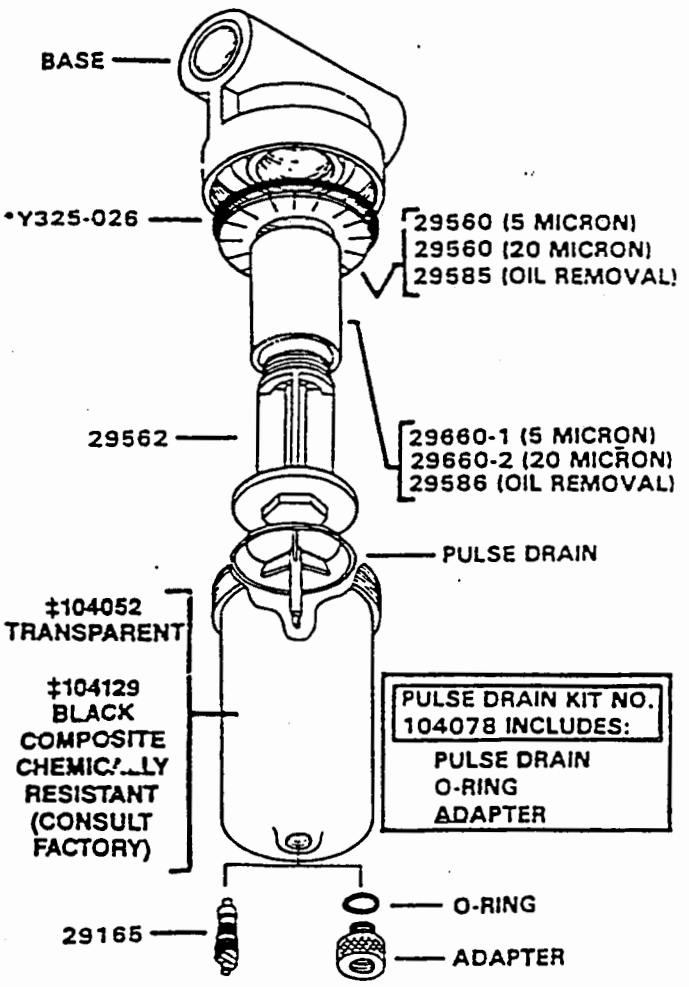

‡INCLUDES 29165 DRAIN VALVE
*ORDER REPAIR KIT NO. 104025

ULTRASORB® System
Limited Warranty

This warranty supersedes and replaces any warranty statements orally made by the Sales Person, Distributor, or Dealer or contained in written instructions or other Brochures or informational documents in relation to this product.

THERE ARE NO WARRANTIES WHICH EXTEND BEYOND THE DESCRIPTION ON THE FACE HEREOF

The Manufacturer Warrants, parts only for a period of twelve (12) months from the time of startup, not to exceed fourteen (14) months from the date of shipment, the new ULTRASORB® System to be free from defects in material and workmanship under the normal use and service when operated and maintained in strict accordance with the ULTRASORB® System operating instructions. Labor costs for replacement or repair of said parts will be free of charge for a period of sixty (60) days from the time of initial startup, not to exceed one hundred and twenty (120) days from the date of shipment, in the contiguous forty eight (48) states.

The Manufacturer's obligations under this warranty is being limited to repairing or replacing any part found to its satisfaction to be so defective, provided that such part is, upon request, returned to the Distributor or Manufacturer, with freight prepaid. This warranty does not cover parts damaged by decomposition from chemical action or wear caused by abrasive materials, nor does it cover damage resulting from misuse, abuse, or any other than its intended use, accident, neglect, or from improper operation, maintenance, installation, modification or adjustments.

This warranty does not cover parts or equipment used with the ULTRASORB® System that are not made by the manufacturer, since these items are covered by warranties from the respective manufacturer. The Manufacturer makes no warranty as to electrical apparatus or other materials not of its manufacturer.

The Manufacturer's sole responsibility shall be limited to repair or replacement of the equipment within the terms stated herein above.

The Manufacturer shall not be liable for consequential damages whether or not caused by manufacturer's negligence or resulting from any expressed or implied warranty or breach thereof. Consequential damages for the purpose of this agreement shall include, but are not limited to, the loss of use, income or profit, or loss of or damage to property occasioned by or arising out of in-operation, use, the operation, installation, repair, or replacement of the equipment or otherwise.

It is understood that any controversy or claim arising out of or relating to the **ULTRASORB®** System Warranty herein or the alleged breach thereof, shall be settled by arbitration in accordance with the rules of the American Arbitration Association of America, Palm Beach County, Florida, and judgment upon the award rendered by the arbitrator(s) may be entered in any court baring jurisdiction thereof.

PROCESS PERFORMANCE WARRANTY

The Manufacturer Warrants that when installed and operated in accordance with the Manufacturer's written instructions, the **ULTRASORB®** System will remove dirt, oil, and grease from wash water. No other warranty expressed or implied should be considered valid. There are numerous operating conditions which will affect the efficiency of the **ULTRASORB®** System, thereby making any general water quality statement unrealistic.

WARRANTY SERVICE

To obtain warranty service, fill out the **Warranty Request Form** and contact:

RGF WARRANTY DEPARTMENT
Outside of Florida (800) - 842 - 7771
In Florida (407) - 848 - 1826
or FAX (407) - 848 - 9454

A warranty representative will help with the warranty problem and determine the status and a **Warranty Authorization Number** will be given at that time. Be prepared to answer specific questions on the problem at hand. If there are warranted parts that need to be returned, fill in the **Warranty Authorization Number on the Warranty Request Form** along with the items being submitted for warranty and an brief explanation of the problem or defect and return it and the part(s) to:

RGF Environmental Systems, Inc.
c/o Warranty Department
3875 Fiscal Court
West Palm Beach, Florida 33404

ULTRASORB® System
Limited Warranty Policy

RGF ENVIRONMENTAL SYSTEMS, INC. ["Manufacturer"] Warrants the ULTRASORB® System to be free from DEFECTS in Material and Workmanship.

HOW LONG IS THE WARRANTY?

- For twelve (12) months from the date of initial startup of the system; not to exceed fourteen (14) months from the date of shipment.
- The Installation / Startup Record and Warranty Registration Form should be signed and dated by an authorized officer or employee of the customer and returned to RGF promptly to activate the warranty.
- The Labor required by the manufacturer in order to replace or repair the ULTRASORB® System is free of charge for a period of sixty (60) days from the initial startup not to exceed one hundred and twenty (120) days from the date of shipment, in the contiguous forty eight (48) states.

HOW DO I CONTACT RGF ENVIRONMENTAL SYSTEMS ABOUT MY WARRANTY, A QUESTION, OR A COMPLAINT?

- A question or a complaint mat be addressed directly by your local Distributor or dealer.
- If they can not answer the question or complaint directly, then call or FAX the Warranty Department at RGF at:

RGF WARRANTY DEPARTMENT

Outside of Florida	*(800) - 842 - 7771*
In Florida	*(407) - 848 - 1826*
or FAX	*(407) - 848 - 9454*

ARE THERE ANY PARTS THAT ARE NOT COVERED BY THIS WARRANTY? (That the Manufacturer will not repair or replace)

- Parts that are damaged by decomposition from chemical action or wear caused by abrasive materials, nor does it cover damage resulting from misuse, abuse, any other than it's intended use, accident, neglect, or from improper operation, maintenance, installation modification or adjustments.

- Parts not made by the Manufacturer, such as the electric pressure pump motor or other materials not of it's manufacturer. However, RGF will process the claim with the pump or other manufacturer.

WHAT SHOULD BE DONE IN THE EVENT THAT THE EQUIPMENT IS DAMAGED BY SHIPPING?

- Immediately upon receipt of the system, the purchaser is responsible to take the shipping containers off of the truck and inspect the equipment and parts for damage.

- If there is any visible damage to the equipment:
  1. Notify the driver of the courier company immediately and write on the Bill of Lading what is damaged or missing.
  2. Call *RGF* immediately at 1 - (800) - 842 - 7771 outside of Florida, 1 - (407) - 8484- 1826 in Florida, or FAX 1- (407) - 848 - 9454.

WHAT IF DAMAGE IS FOUND ON THE EQUIPMENT AFTER THE COURIER HAS LEFT?

- Claims for concealed shipping damage must be reported to the courier and a copy sent to RGF in writing via FAX 1 - (407) - 848 - 9454 or certified U.S. mail within fifteen (15) days from the date of shipment.

  NOTE:
  The courier company will not cover the damages if the foregoing steps are not adhered to.

STEPS THAT SHOULD BE TAKEN IF WARRANTY WORK OR REPLACEMENT IS NEEDED.

- Call your local distributor or RGF Warranty Department and notify them of the problem or malfunction. Be prepared to be very descriptive with the problem.

- If it is determined that a part has malfunctioned due to defect, a Warranty Authorization Number will be given for tracking the part. Fill out the Warranty Request Form along with the Warranty Authorization number and return it along with the defective part prepaid to:

  RGF Environmental Systems, Inc.
  c/o Warranty Department
  3875 Fiscal Court
  West Palm Beach, Florida 33404

THINGS THAT SHOULD BE DONE TO HELP KEEP THE ULTRASORB SYSTEM RUNNING EFFICIENTLY.

- Read the Operations Manual thoroughly.
- Make sure all of the employees who operate the system are fully trained on the procedures for operating the system and follow preventive maintenance routines strictly.
- Do not run water that has contaminants through the system that it is not designed to remove.
- Make sure the system is operated in accordance with the Manufacturer's suggested instructions.
- Replace filters as recommended in the Operations Manual.
- Control the water quality in accordance with RGF's suggested guidelines.
- Keep sump pits, trenches, and weirs cleared of heavy sediment build up. Heavy solids build up will cause the sump pump to overheat and fail to operate properly. Failure to prevent this will void the sump pumps warranty.
- Lack of a water clarifier (such as hydrogen peroxide, chlorine, WC-1, Ozone, etc.) will cause algae to grow resulting in plugged filters and foul smell.

WHAT SERVICE CAN IS EXPECTED FROM THE DISTRIBUTOR?

- The Distributor will install, perform the initial startup, and train your personnel.
- The Distributor will replace any defective parts for the first sixty (60) days, labor included, in the forty eight (48) contiguous states.

Should there be any questions relating to this warranty policy information, please feel free to contact our customer service representative at:

RGF Customer Service

Outside of Florida	*(800) - 842 - 7771*
In Florida	*(407) - 848 - 1826*
FAX	*(407) - 848 - 9454*

or Write

RGF Environmental System, Inc.
c/o Customer Service Deptment
3875 Fiscal Court
West Palm Beach, Florida 33404

ULTRASORB® System
Warranty Request Form

NOTE: THIS FORM MUST BE COMPLETED AND ACCOMPANY ALL RETURNED ITEMS

Warranty Authorization Number: W-_____

CUSTOMER: NAME _____
ADDRESS _____
_____
PHONE _____ FAX _____

DISTRIBUTOR: NAME _____
ADDRESS _____
_____
CONTACT _____

UNIT: MODEL _____
SERIAL # _____
DATE OF PURCHASE _____

ITEMS BEING SUBMITTED FOR WARRANTY:

PLEASE LIST THE PARTS AND GIVE A BRIEF DESCRIPTION OF THE PROBLEM

ITEMS
1) _____
2) _____

DESCRIPTION (COMMENTS)
1) _____
2) _____
3) _____

SHIP TO: *RGF ENVIRONMENTAL SYSTEMS, INC.*
c/o WARRANTY DEPTMENT
3875 FISCAL COURT
WEST PALM BEACH, FLORIDA 33404
FAX 407-848-9454

(FOR RGF USE ONLY)
DATE ITEMS RECVD _____
RECIEVED BY _____
REPLACEMENT PART SENT/WARRANTY APPROVED ☐ WARRANTY DENIED ☐
COMMENTS _____
_____
_____

4/94

ULTRASORB® System
Warranty Validation Form

To validate the Warranty for the system, this form <u>must be read, signed and returned to</u>:

RGF Environmental Systems, Inc.
c/o Warranty Department
3875 Fiscal Court
West Palm Beach, Florida 33404
FAX 407-848-9454

1. I have inspected the system upon arrival for shipping damage and have reported any problems to the local distributor, the courier company, or RGF within the required time period.

2. I have been provided with training on the operation and procedures for the system by the distributor or RGF representative, during the installation and startup of the system.

3. I understand it is the customer's responsibility to:

   - Regularly monitor and maintain the water chemistry of the system and to utilize properly only any chemicals or cleaning agents that are compatible with the equipment.
   - To regularly clean out the sump pit and perform suggested preventive maintenance on the system in order to keep the system in good working order. I understand that failing to do so will adversly effect the efficiency of the system. I also understand, that it is my responsibility to properly dispose of the used filters, pit sediment, and any other by-products accordingly.
   - Protect the system from extreme (high/low) temperatures to prevent damage to the components and piping of the system.
   - Notify the local distributor or RGF Warranty Dept. immediately upon any malfunction of the system in order to receive warranted work or parts.

4. I understand that any controversy or claim arising out of or relating to the **ULTRASORB®** System Warranty herein or the alleged breach thereof, shall be settled by arbitration in accordance with the rules of the American Arbitration Association of America, Palm Beach County, Florida, and judgment upon the award rendered by the arbitrator(s) may be entered in any court baring jurisdiction thereof.

I hereby acknowledge the above.

Customers Name _____

Address _____

_____

Signature _____ **Date** _____

4/94

ULTRASORB® System
Installation / Startup Checklist

MAINTENANCE PROCEDURES, CHECK IF COVERED & APPLICABLE

_____ Overall System Description
_____ EPA & Sewer Rules
_____ Wash Pad Maintenance
_____ Solids Cleaning Procedure
_____ Bleed Lines
_____ Solids Grid
_____ Filter Media
_____ Hydrocarbon Absorber III
_____ Jet Pump and Switch
_____ TurboHydrozone
_____ Polishing Filters
_____ Pressure Tank
_____ Options:_____
_____ Options:_____

_____ Sump Pump & Maintenance
_____ Electrical, Shutoffs, Etc.
_____ Centrifugal Separator
_____ Oil Accumulator
_____ Coalescing Tubes
_____ Hydrocarbon Absorber II
_____ Centrifugal Pump
_____ Chlorinator
_____ Fresh Water Make-up
_____ Air Compressor
_____ Pressure Gauges
_____ 3 Way Control Valve
_____ Options:_____
_____ Options:_____

CRITICAL FUNCTIONS AND PROCEDURE DISCUSSIONS

_____ Basic Water Chemistry; pH, Alkalinity, TDS
_____ Algae/Bacteria Control; Chlorine, Hydrogen Peroxide Water Cycling, WC1
_____ Water Testing; ETS Kit, pH Paper, TDS Meter

_____ Operator Safety; Clothing, Ventilation, Etc.
_____ Cleaning Agents; Enviro-Control, Ultra-Safe
_____ Water Management Recycled / Fresh Water
_____ Where to Get Help; Manuals, Distributor, *RGF*

CUSTOMER HANDOUTS AND SUPPORT MATERIAL

_____ Operating Manuals
_____ Maintenance Video

_____ Water Test Kit
_____ Spare Parts List

CUSTOMER EVALUATION OF START-UP TRAINING:

How Would You Rate Your Training? Good ☐ Fair ☐ Poor ☐

General Comments_____

_____

_____

_____

RGF Tech. Rep. Signature_____

Trainees Signature_____

4/94

ULTRASORB® System
Installation / Startup Record

Model Number _____ Installation Date _____

Serial Number _____ Start-Up Tech. _____

Company _____

Customer _____

Address _____

_____

Phone ( ) _____ FAX ( ) _____ Contact _____

Names of Trainees	Position	Initials

What is Being Cleaned _____ Hr's. Per Day _____

Washpad Design & Const. By? _____

Is the Washpad Satisfactory? Yes ☐ No ☐. If No, Explain _____

_____

_____

Was the Unit Missing Parts? Yes ☐ No ☐. If Yes, Explain _____

_____

_____

Did the Unit Have Shipping or Hidden Damage? Yes ☐ No ☐. If Yes, Explain _____

_____

_____

List Any Options/Modifications with this Unit. _____

_____

_____

ULTRASORB® System
Client Questionnaire

Company Name_____

Contact Person_____

Location_____

Phone ( )_____

RGF Dealer/Salesman_____

Purchase Date (approx.)_____

HOW WOULD YOU RATE THE FOLLOWING:

	GOOD	FAIR	POOR
General Operation	_____	_____	_____
Recoiled Water Quality	_____	_____	_____
Quality of System	_____	_____	_____
Service & Support	_____	_____	_____
Warranty	_____	_____	_____
Installation / Training	_____	_____	_____
Safety	_____	_____	_____
RGF Dealer / Salesman	_____	_____	_____
Value	_____	_____	_____

Would you purchase another *RGF* System? Yes ☐ No ☐

Comments_____

_____

_____

_____

_____

Completed By:_____ Date_____

Please return this form to:

RGF Environmental Systems
c/o Customer Service Dept.
3875 Fiscal Court
West Palm Beach, FL 33404
Fax: 407-848-9454

4/94

APPENDIX E

Greencastle USARC/AMSA-113, PA:

Site Plans and Recommendations

Pump Station Calcs and Details

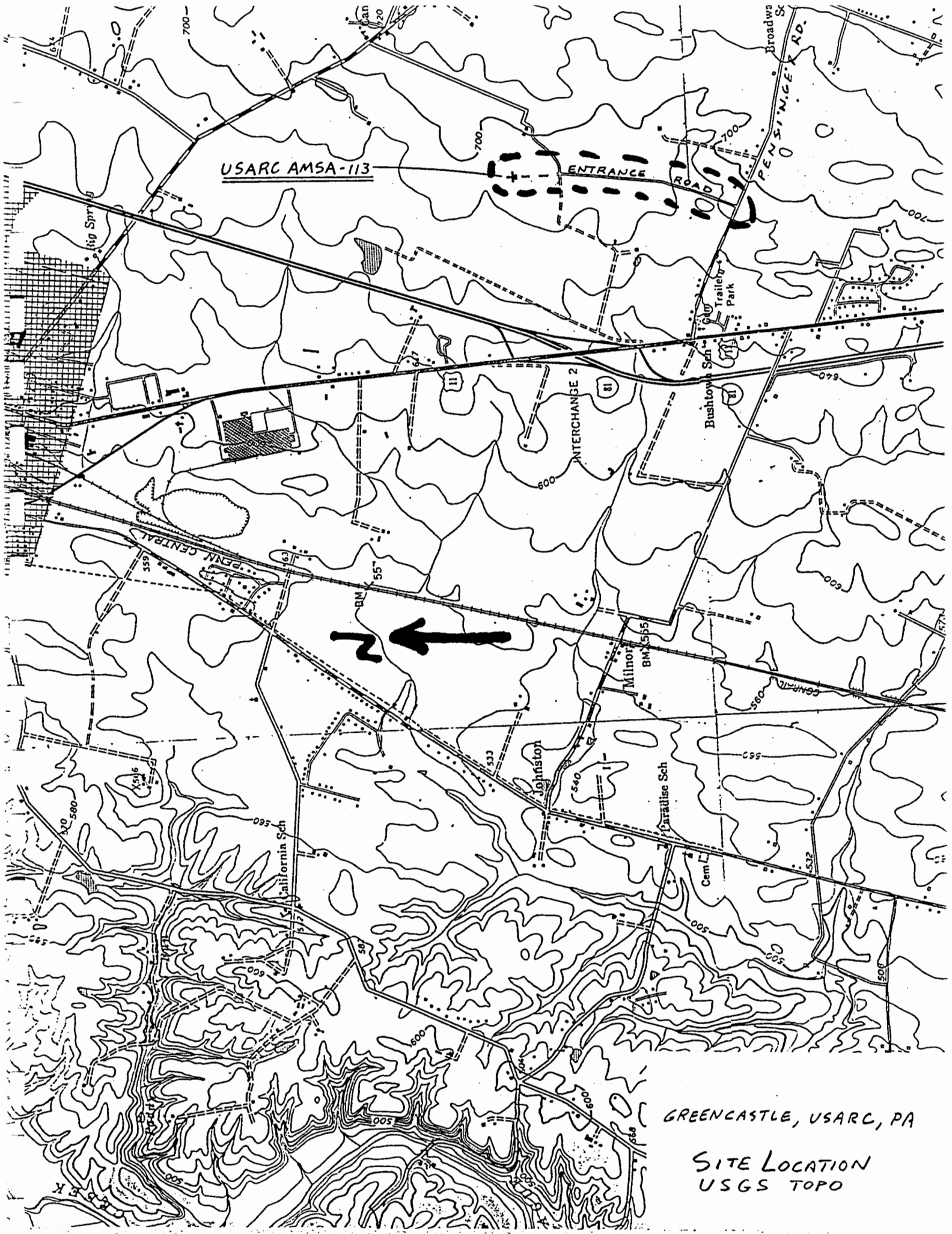

GREENCASTLE, USARC, PA

SITE LOCATION
USGS TOPO

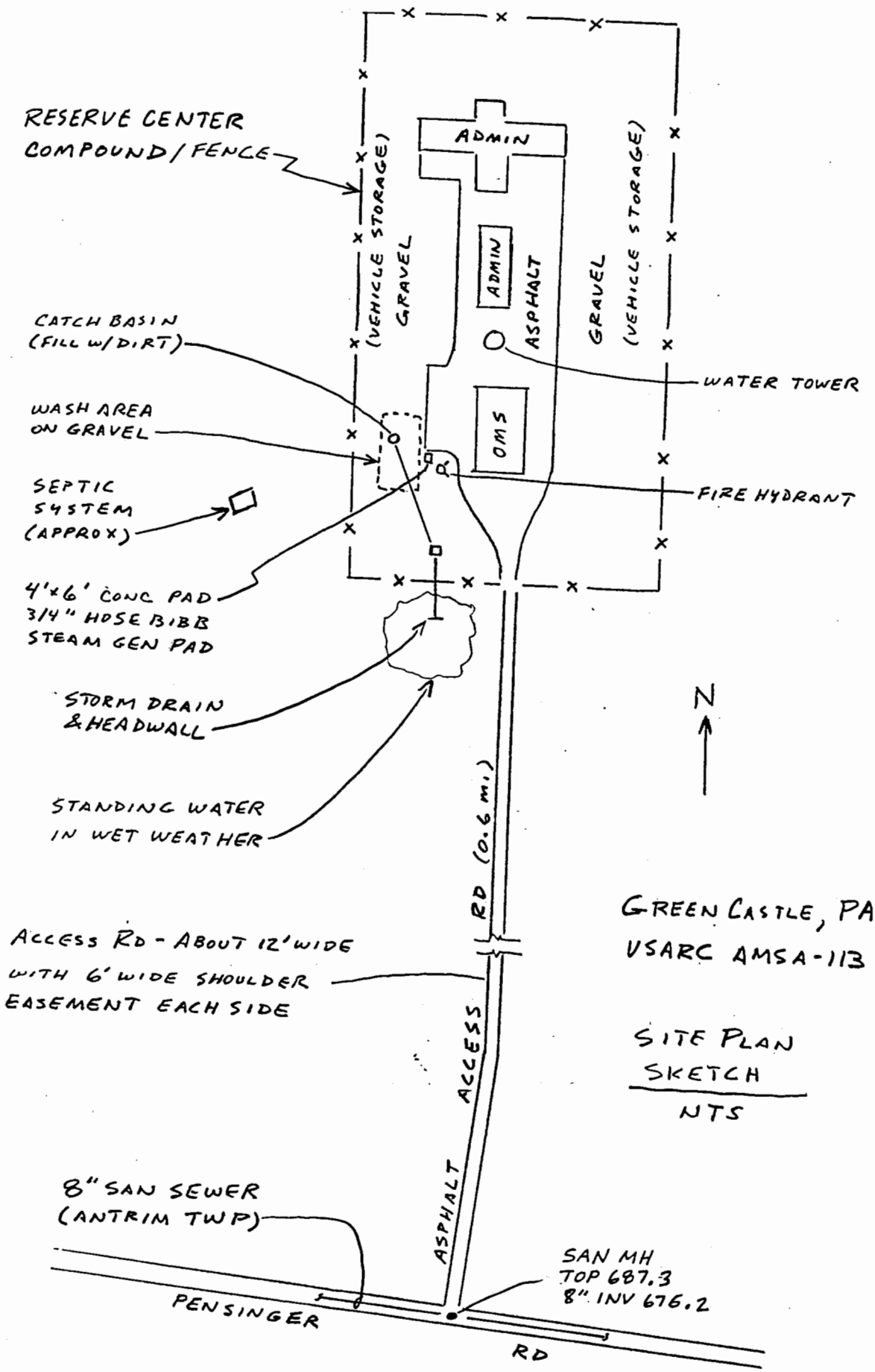
RESERVE CENTER
COMPOUND / FENCE
ADMIN
ADMIN
OMS
(VEHICLE STORAGE)
GRAVEL
ASPHALT
GRAVEL
(VEHICLE STORAGE)
CATCH BASIN
(FILL W/DIRT)
WATER TOWER
WASH AREA
ON GRAVEL
FIRE HYDRANT
SEPTIC
SYSTEM
(APPROX)
4'x6' CONC PAD
3/4" HOSE BIBB
STEAM GEN PAD
STORM DRAIN
& HEADWALL
STANDING WATER
IN WET WEATHER
N
RD (0.6 mi)
GREEN CASTLE, PA
USARC AMSA-113
ACCESS RD - ABOUT 12' WIDE
WITH 6' WIDE SHOULDER
EASEMENT EACH SIDE
ACCESS
SITE PLAN
SKETCH
NTS
8" SAN SEWER
(ANTRIM TWP)
ASPHALT
SAN MH
TOP 687.3
8" INV 676.2
PENSINGER
RD

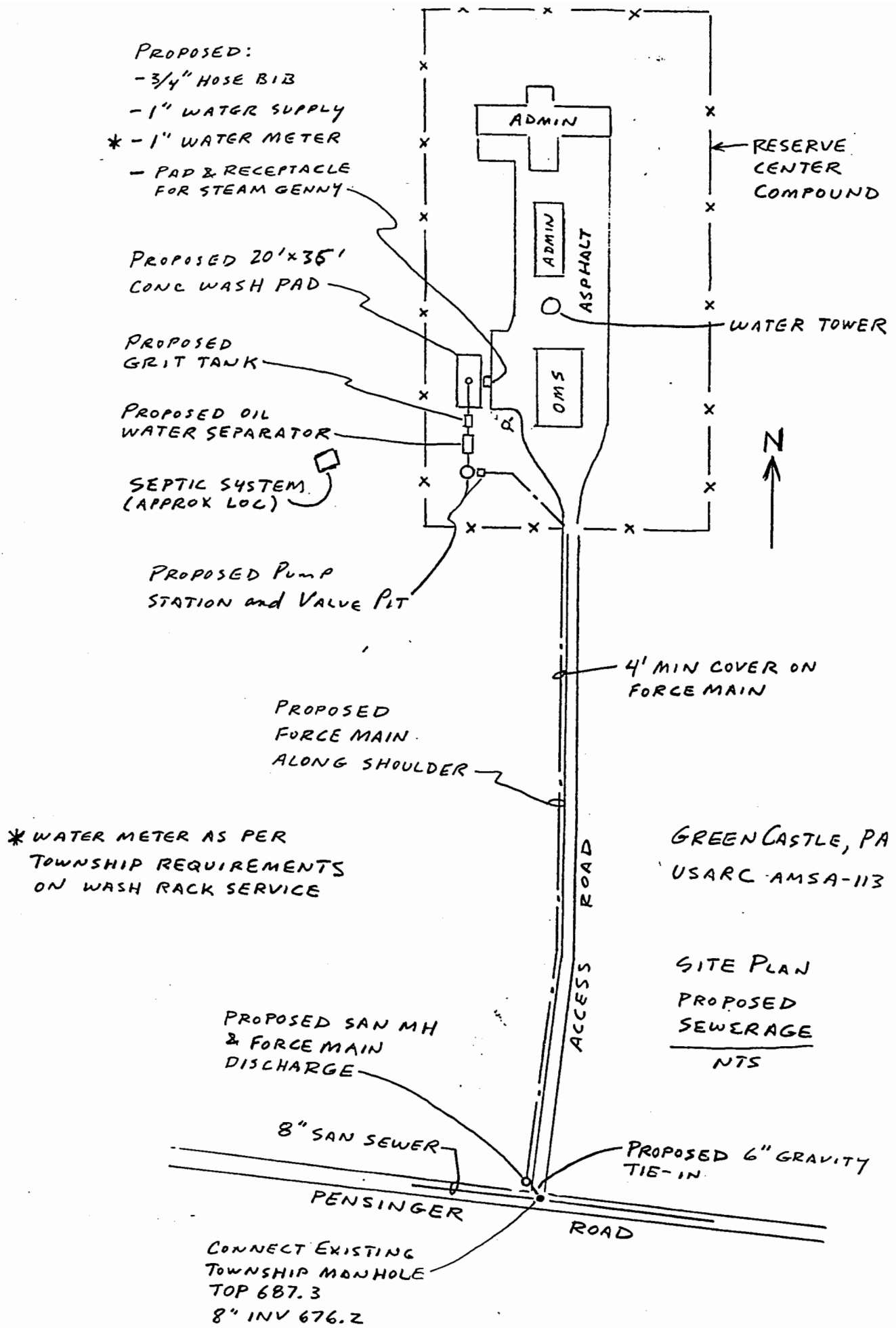
PROPOSED:
- 3/4" HOSE BIB
- 1" WATER SUPPLY
* - 1" WATER METER
- PAD & RECEPTACLE FOR STEAM GENNY
PROPOSED 20'x35' CONC WASH PAD
PROPOSED GRIT TANK
PROPOSED OIL WATER SEPARATOR
SEPTIC SYSTEM (APPROX LOC)
PROPOSED PUMP STATION and VALVE PIT
ADMIN
ADMIN
ASPHALT
OMS
RESERVE CENTER COMPOUND
WATER TOWER
N
4' MIN COVER ON FORCE MAIN
PROPOSED FORCE MAIN ALONG SHOULDER
* WATER METER AS PER TOWNSHIP REQUIREMENTS ON WASH RACK SERVICE
ACCESS ROAD
GREENCASTLE, PA
USARC AMSA-113
SITE PLAN
PROPOSED SEWERAGE
NTS
PROPOSED SAN MH & FORCE MAIN DISCHARGE
8" SAN SEWER
PROPOSED 6" GRAVITY TIE-IN
PENSINGER ROAD
CONNECT EXISTING TOWNSHIP MANHOLE
TOP 687.3
8" INV 676.2

GREENCASTLE USARC, PA
AERIAL PHOTOGRAPH

GREENCASTLE USARC, PA Pump Station Calcs

0.62 mile × 5280 =	3270'	(PENSINGER RD TO ENTRANCE)
	300'	(ESTIMATED PIPING ON-SITE)
Total length	3570'	

Equivalent length:

1- 4" GV	2
1- 4" CV	22
2- 90° EL	20
4- 45° EL	4

TOTAL EQUIVALENT LENGTH 3618 say 3700 LF

WET WELL SIZE:

For 6' DIA PRECAST MH $V = \pi 3^2 \times 7.48 = 211.5$ gal/VF

For Depth of 3': $211.5 \times 3 = 643.5$ gal

Estimated Elevations:

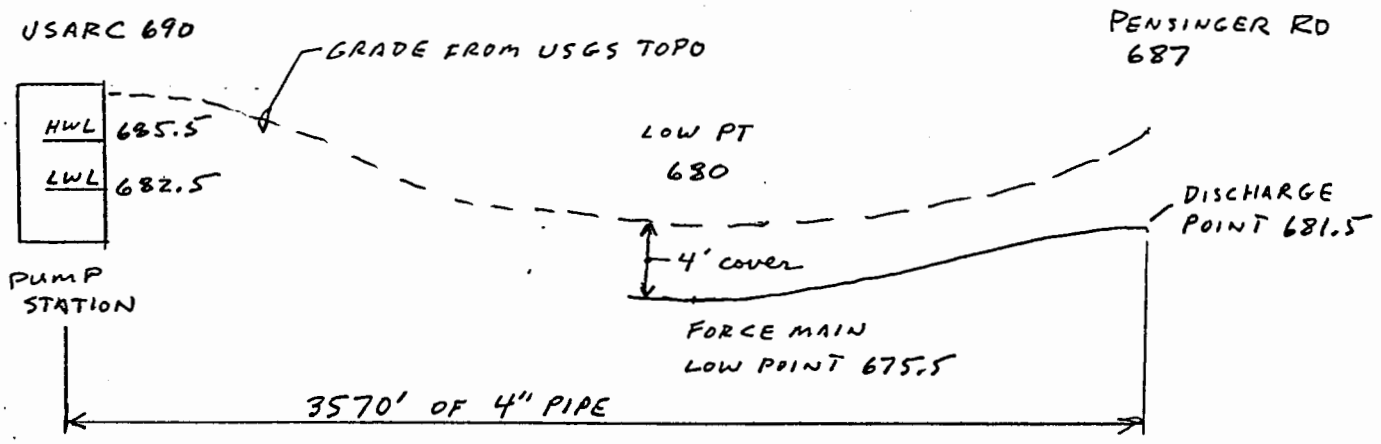

Estimated Static Head:

681.5 - 685.5 = -4' @ HWL

681.5 - 682.5 = -1' @ LWL

Estimated Flow: Use 4" Force Main with Minimum Velocity of 2 fps.

Velocity (fps)	Flow (GPM)	Total Head (FT) @ LWL C=130	C=100
2.3	90	22.0	36.4
2.6	100	27.0	44.4
2.8	110	32.4	53.2
3.0	120	37.8	–
3.6	140	51.0	–
4.1	160	65.7	–

Pump Selection:

Flygt Model CP 3102 1 or 3 Ø 5HP Duplex arrangement with simplex operation and alternator, High water alarm and Control Panel.

Operating Point: 125 gpm @ 45' V= 3.2 fps C=130 (LWL)
100 gpm @ 47' V= 2.6 fps C=100 (LWL)

C-3102

IMPELLER/MOTOR - NOM. SIZES

CP

PUMP MODEL	IMPELLER CODE	HP RATING CP	HP RATING CT	HP RATING CS	VAC	RPM	D_1	D_2	D_3	D_4
3102 3Ø	432	5.0	--	5.0	200 230/460 575	1700	4"	4"	4"	---
	433		3.4							4"
	435		--							---
	436		--							---
	437		3.4							4"
	** 441		--				6" or 8"	6"	6"	---
	** 442									
3102 1Ø	433	4.0	--	4.0	230	1730	4"	4"	4"	---
	436									
	437		3.2							4"

**ALSO AVAILABLE WITH 4" VOLUTE AND 4" x 4" DISCHARGE CONNECTION.SEE CURVES

$D_1 = 4"$
$D_2 = 4"$

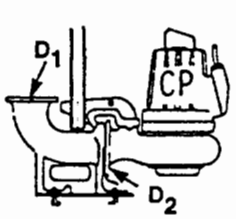

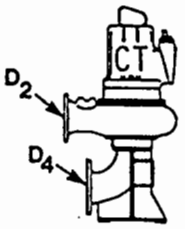

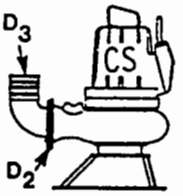

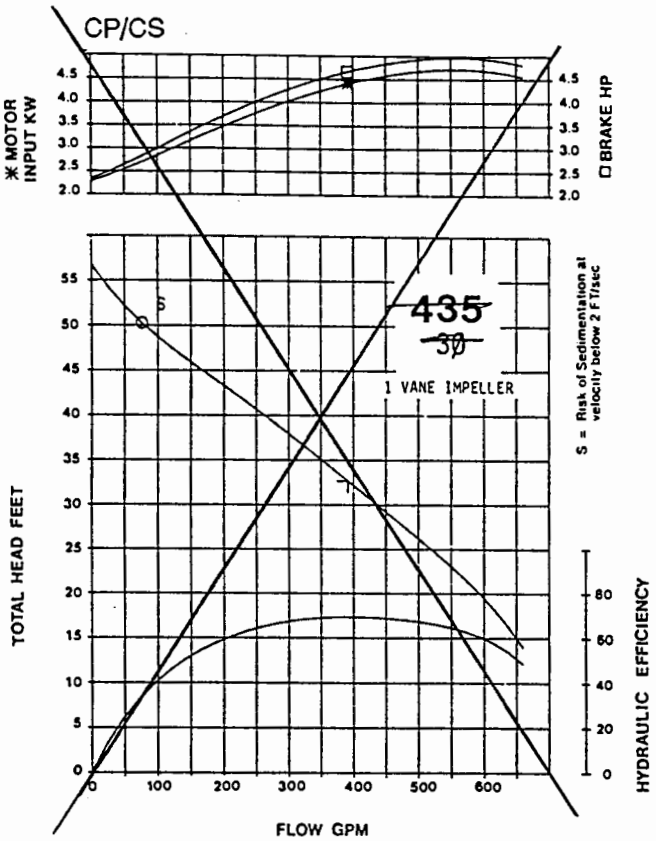

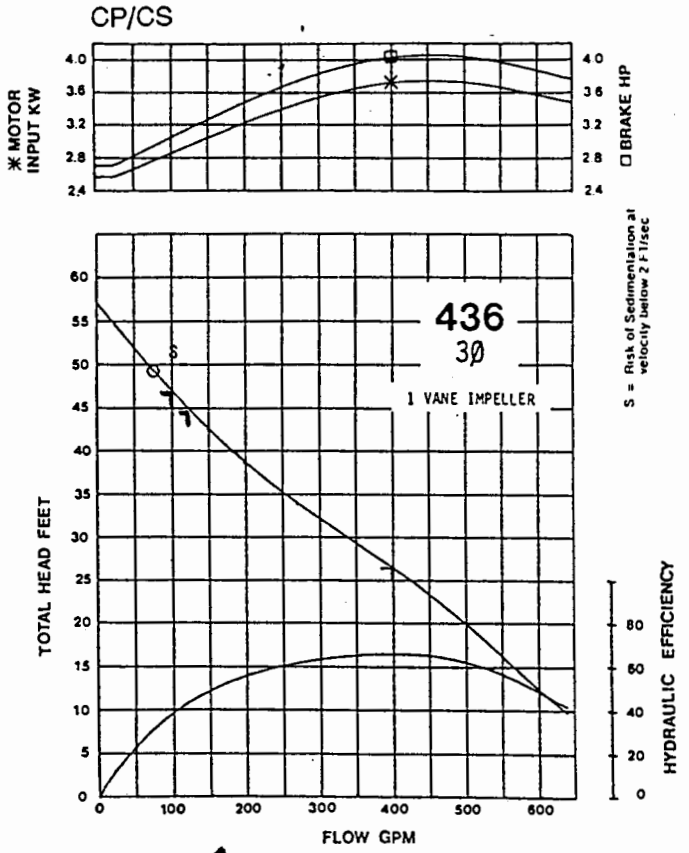

3Ø or 1Ø

Operating Points @ LWL:

125 gpm @ 45' C=130 V=3.2 fps

100 gpm @ 47' C=100 V=2.6 fps

SECTION	MODEL
5	3102
SUPERSEDES 4/86	ISSUED 6/90

CP-3102

Lift Station Dimensions

NOTE: DUPLEX PUMPS WITH SIMPLEX OPERATION & ALTERNATOR

FLYGT CONTROL CENTER
SUBJECT TO ENGINEER'S SPECIFICATIONS
(WALL, POLE, OR PEDESTAL MOUNTING)

JUNCTION BOXES (NOT SHOWN) FOR THE PUMP CABLES MUST BE LOCATED ABOVE THE FLOOD ELEVATION.

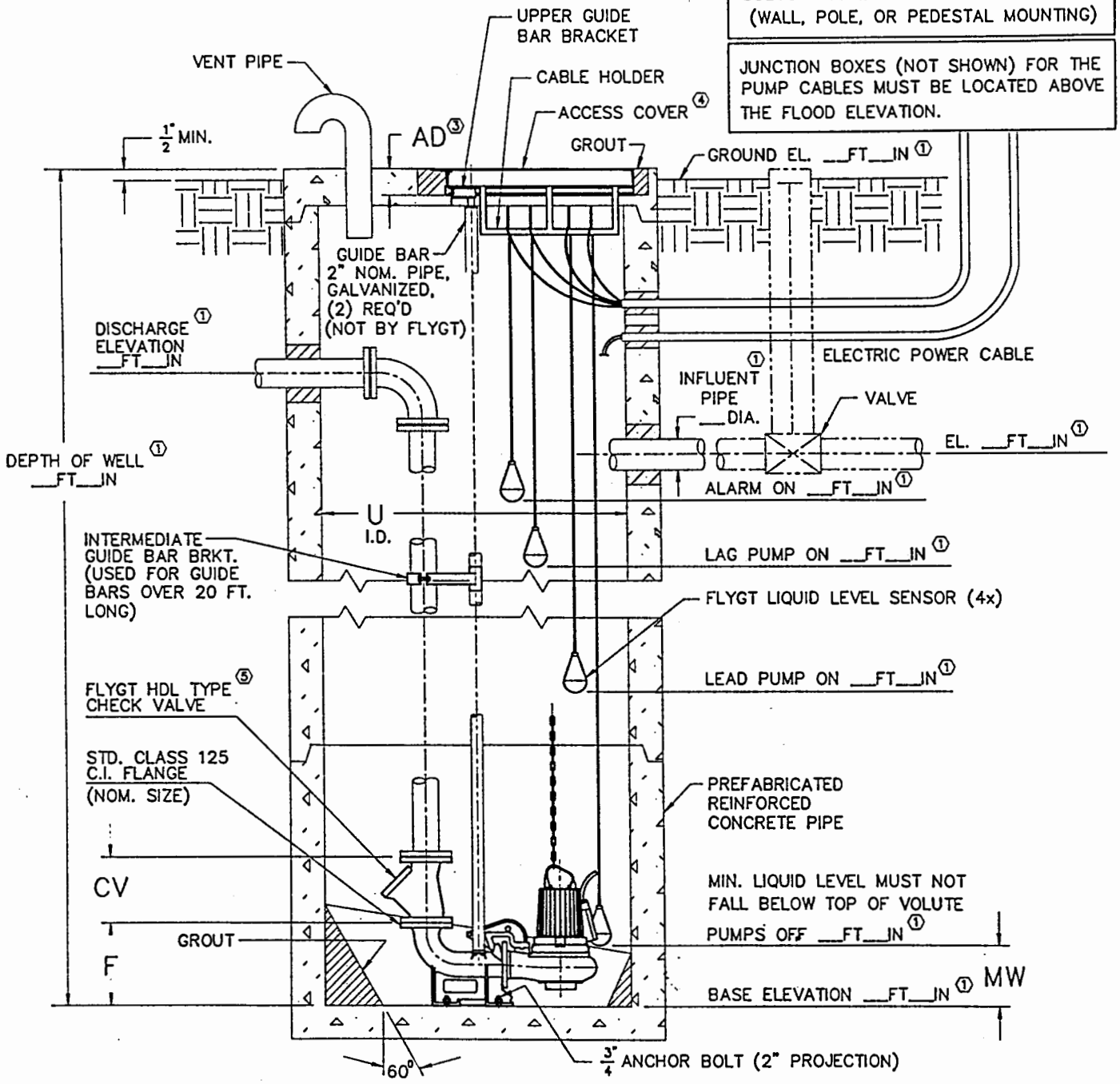

NOTES:

1. INDICATES INFORMATION TO BE DETERMINED BY OTHERS.
2. LOCATE ANCHOR BOLTS USING CLEAR INSIDE EDGE OF ACCESS FRAME AND CENTER LINE OF PUMP AS REF. POINT.
3. GROUT OPENING FOR ACCESS FRAME
4. HEAVY DUTY ACCESS COVER AVAILABLE FROM FLYGT. (FOR DIM. CONSULT ENGR.)
5. CONFIGURATION AND DIMS. SHOWN ARE MIN. REQUIREMENTS ONLY. ALL DETAILS, INCLUDING SIZING OF PIT, TYPE, LOCATION AND ARRANGEMENT OF VALVES AND PIPING, ETC. ARE TO BE SPECIFIED BY THE CONSULTING ENGINEER AND ARE SUBJECT TO HIS APPROVAL.

SECTION	MODEL
5	3102
SUPERSEDES 4/86	ISSUED 6/90

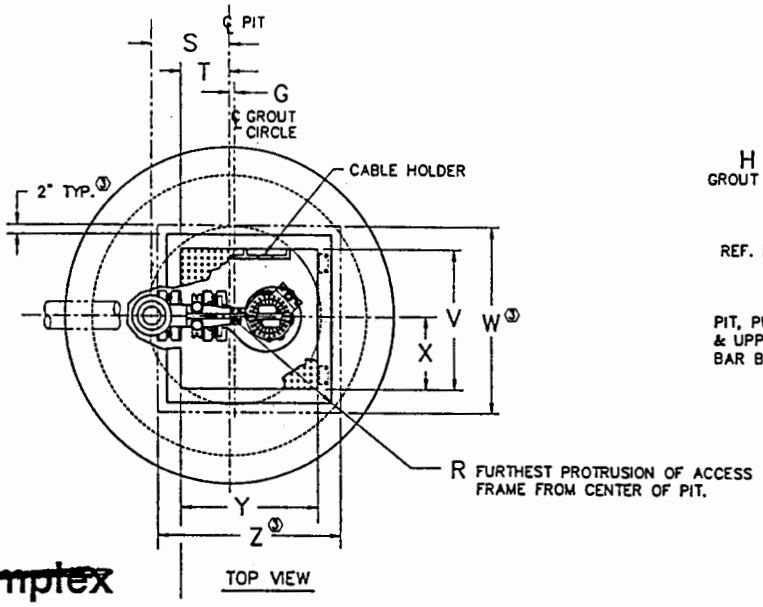

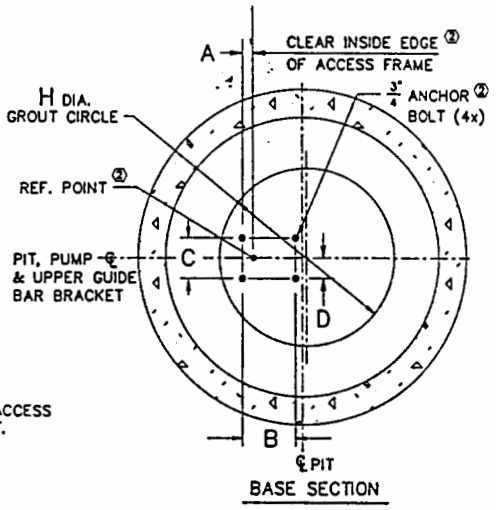

~~Simplex~~

ALL DIMENSIONS IN INCHES

DIMENSIONAL CHART																					
NOM. SIZE	VERSION	STATION													COVER						
		A	B	C	D	F	G	H	R	S	T	U	CV	MW	SIZE	V	W	X	Y	Z	AD
4"	STD	2 3/4	9 7/8	7 3/4	3 7/8	15 3/4	1	38	29	17	10 1/2	60	11 1/2	11	B	30	40	15 1/2	30	40	4 5/8
6"	HV	4 1/4	11	9 1/2	4 3/4	17 3/4	1	38	29	14 1/4	6 1/2	60	14	13	B	30	40	15 1/2	30	40	4 5/8
8"	HV	5 1/2	11	9 1/2	4 3/4	17 3/4	3	38	33 3/4	14	5 1/4	60	19 1/2	13	B	30	40	16	30	40	4 5/8

NOTE: LAG PUMP ENH-10 IS NOT REQUIRED FOR SIMPLEX INSTALLATIONS.

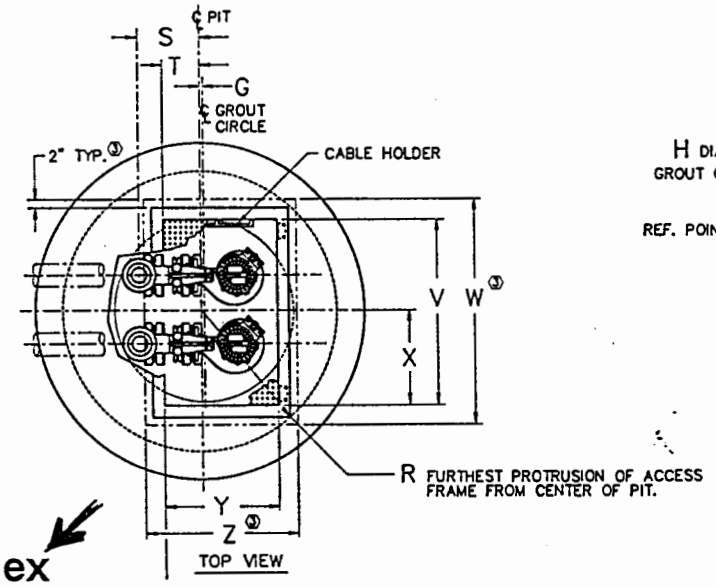

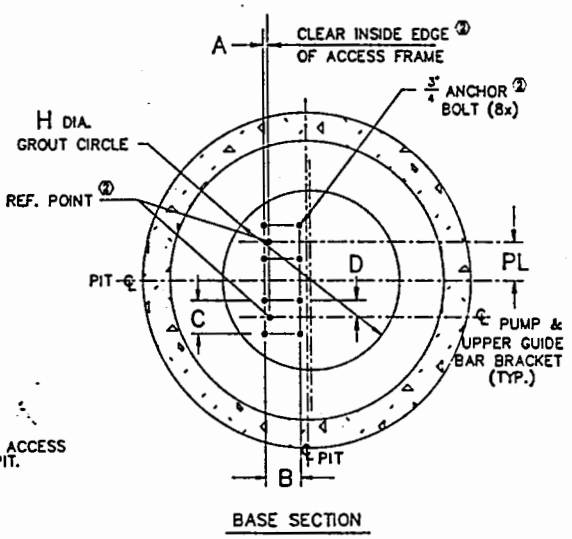

Duplex

ALL DIMENSIONS IN INCHES

DUPLEX PUMPS/SIMPLEX OPERATION

DIMENSIONAL CHART																						
NOM. SIZE	VERSION	STATION														COVER						
		A	B	C	D	F	G	H	R	S	T	U	CV	MW	PL	SIZE	V	W	X	Y	Z	AD
4"	STD.	2 3/4	9 7/8	7 3/4	3 7/8	15 3/4	1	47	36	16	9 1/2	72	11 1/2	11	9	C	48	58	24 1/2	30	40	4 5/8
6"	HV	4 1/4	11	9 1/2	4 3/4	17 3/4	1	46	39	14 1/2	6 7/8	72	14	13	9	C	48	58	25	30	40	4 5/8
8"	HV	5 1/2	11	9 1/2	4 3/4	17 3/4	2	47	39	13	4 1/4	72	19 1/2	13	9	C	48	58	25	30	40	4 5/8

APPENDIX F

Wilkes-Barre USARC, PA:

Site Plans and Recommendations - Alternates 1 & 2

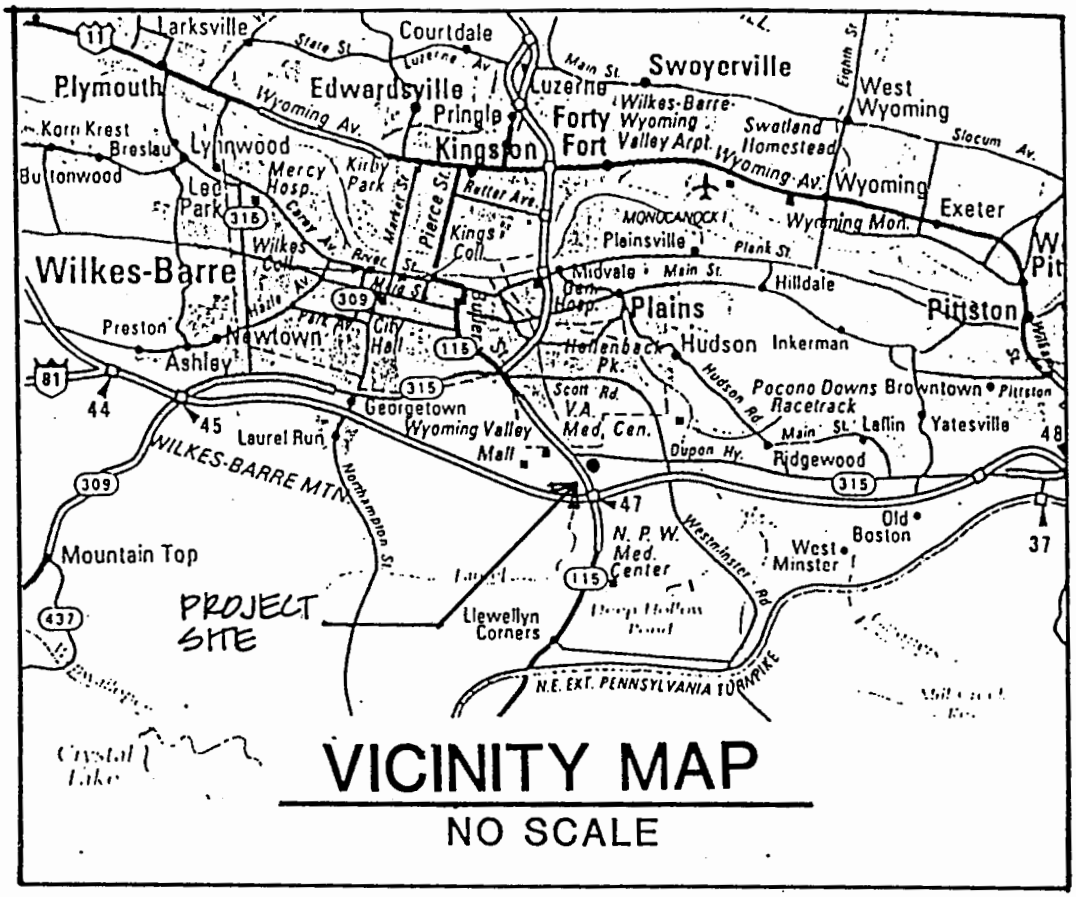
Larksville
Courtdale
Plymouth
Edwardsville
Pringle
Luzerne
Swoyerville
Forty Fort
Kingston
West Wyoming
Wyoming
Exeter
Kornkrest
Breslau
Lynnwood
Buttonwood
Lee Park
Mercy Hosp.
Kirby Park
Wilkes-Barre
Wilkes Coll.
Kings Coll.
Plainsville
Midvale
Plains
Hilldale
Pittston
Preston
Newtown
Ashley
City Hall
Hollenback Pk.
Hudson
Inkerman
Pocono Downs Racetrack
Brownstown
Yatesville
Laflin
Ridgewood
Georgetown
Wyoming Valley Mall
V.A. Med. Cen.
Laurel Run
WILKES-BARRE MTN
Mountain Top
N. P. W. Med. Center
West Minster
Old Boston
PROJECT SITE
Llewellyn Corners
N.E. EXT. PENNSYLVANIA TURNPIKE
Crystal Lake
VICINITY MAP
NO SCALE

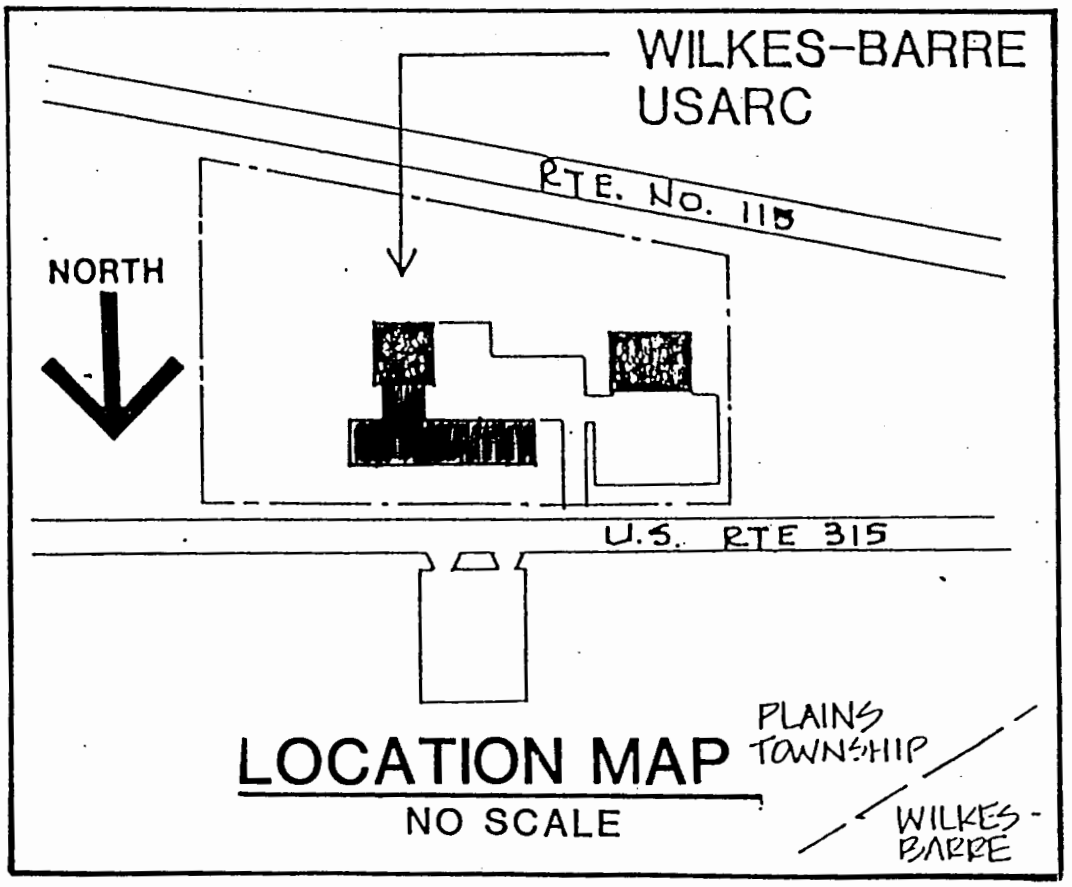
WILKES-BARRE USARC
RTE. NO. 115
NORTH
U.S. RTE 315
LOCATION MAP
NO SCALE
PLAINS TOWNSHIP
WILKES-BARRE

LEGEND

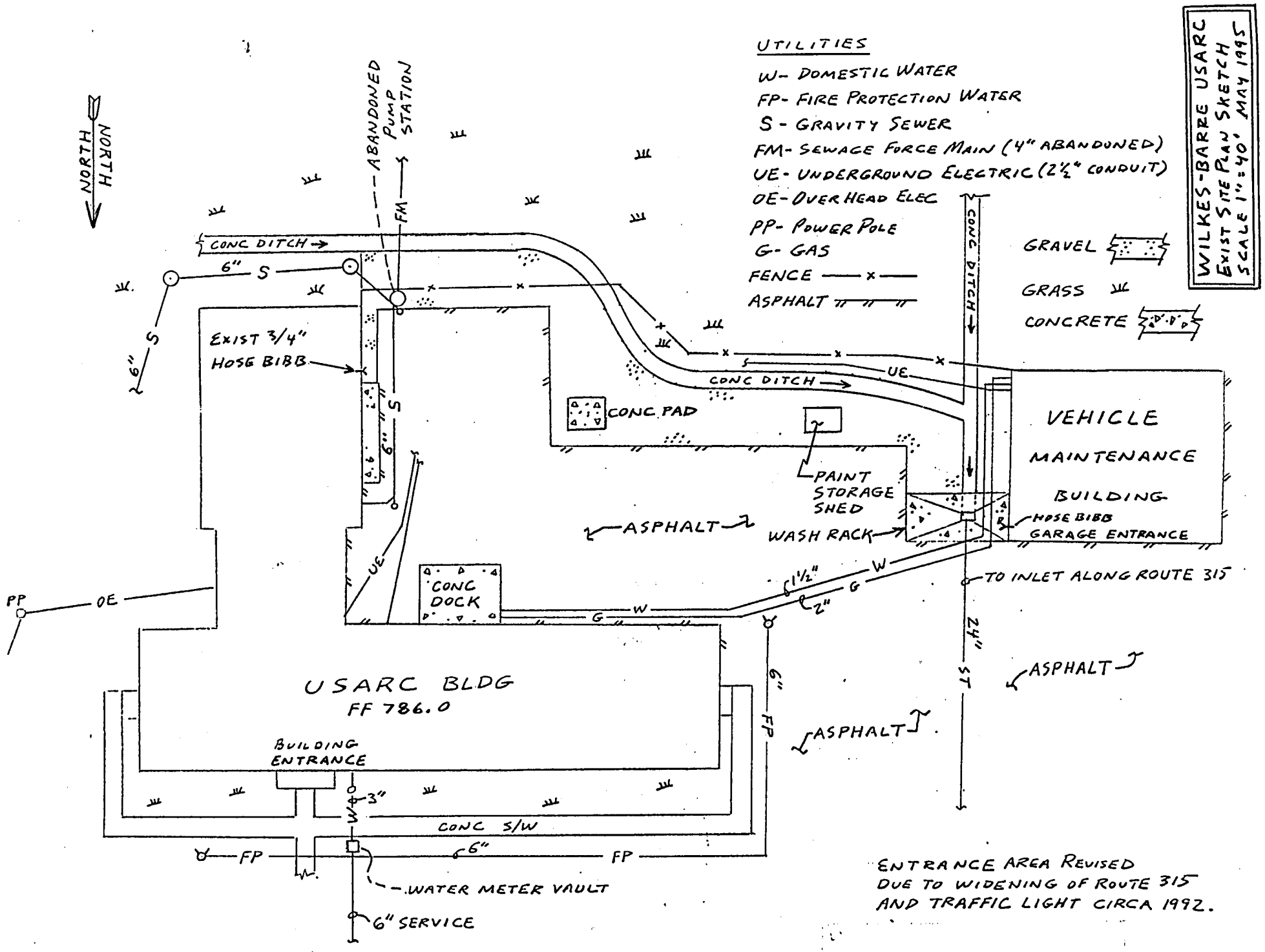
WILKES-BARRE USARC
EXIST SITE PLAN SKETCH
SCALE 1" = 40' MAY 1995
UTILITIES
W- DOMESTIC WATER
FP- FIRE PROTECTION WATER
S - GRAVITY SEWER
FM- SEWAGE FORCE MAIN (4" ABANDONED)
UE- UNDERGROUND ELECTRIC (2½" CONDUIT)
OE- OVER HEAD ELEC
PP- POWER POLE
G- GAS
FENCE
ASPHALT
GRAVEL
GRASS
CONCRETE
NORTH
ABANDONED PUMP STATION
FM
CONC DITCH
6" S
EXIST 3/4" HOSE BIBB
CONC PAD
UE
PAINT STORAGE SHED
WASH RACK
ASPHALT
VEHICLE MAINTENANCE BUILDING
HOSE BIBB
GARAGE ENTRANCE
TO INLET ALONG ROUTE 315
24" ST
CONC DOCK
W
G
1½"
2"
PP
OE
USARC BLDG
FF 786.0
BUILDING ENTRANCE
3"
CONC S/W
6" FP
WATER METER VAULT
6" SERVICE
ENTRANCE AREA REVISED
DUE TO WIDENING OF ROUTE 315
AND TRAFFIC LIGHT CIRCA 1992.

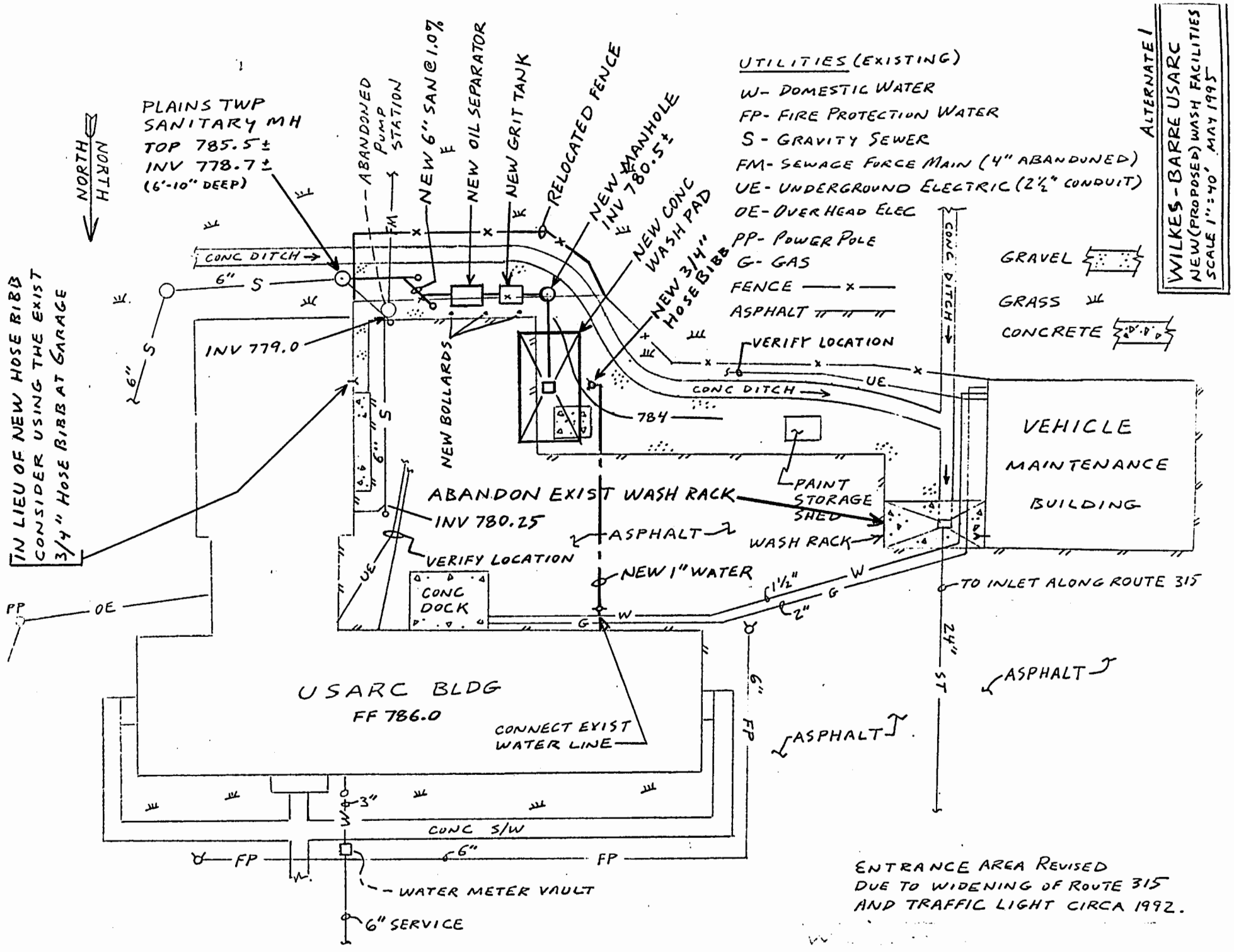
WILKES-BARRE USARC
NEW (PROPOSED) WASH FACILITIES
SCALE 1" = 40' MAY 1995
ALTERNATE 1
UTILITIES (EXISTING)
W- DOMESTIC WATER
FP- FIRE PROTECTION WATER
S - GRAVITY SEWER
FM- SEWAGE FORCE MAIN (4" ABANDONED)
UE- UNDERGROUND ELECTRIC (2½" CONDUIT)
OE- OVER HEAD ELEC
PP- POWER POLE
G- GAS
FENCE
ASPHALT
VERIFY LOCATION
GRAVEL
GRASS
CONCRETE
NORTH
PLAINS TWP SANITARY MH
TOP 785.5±
INV 778.7±
(6'-10" DEEP)
ABANDONED PUMP STATION
NEW 6" SAN @ 1.0%
NEW OIL SEPARATOR
NEW GRIT TANK
RELOCATED FENCE
NEW MANHOLE INV 780.5±
NEW CONC WASH PAD
NEW 3/4" HOSE BIBB
CONC DITCH
INV 779.0
NEW BOLLARDS
784
IN LIEU OF NEW HOSE BIBB CONSIDER USING THE EXIST 3/4" HOSE BIBB AT GARAGE
ABANDON EXIST WASH RACK
INV 780.25
PAINT STORAGE SHED
WASH RACK
VEHICLE MAINTENANCE BUILDING
ASPHALT
VERIFY LOCATION
NEW 1" WATER
CONC DOCK
TO INLET ALONG ROUTE 315
USARC BLDG
FF 786.0
CONNECT EXIST WATER LINE
CONC S/W
WATER METER VAULT
6" SERVICE
ENTRANCE AREA REVISED DUE TO WIDENING OF ROUTE 315 AND TRAFFIC LIGHT CIRCA 1992.

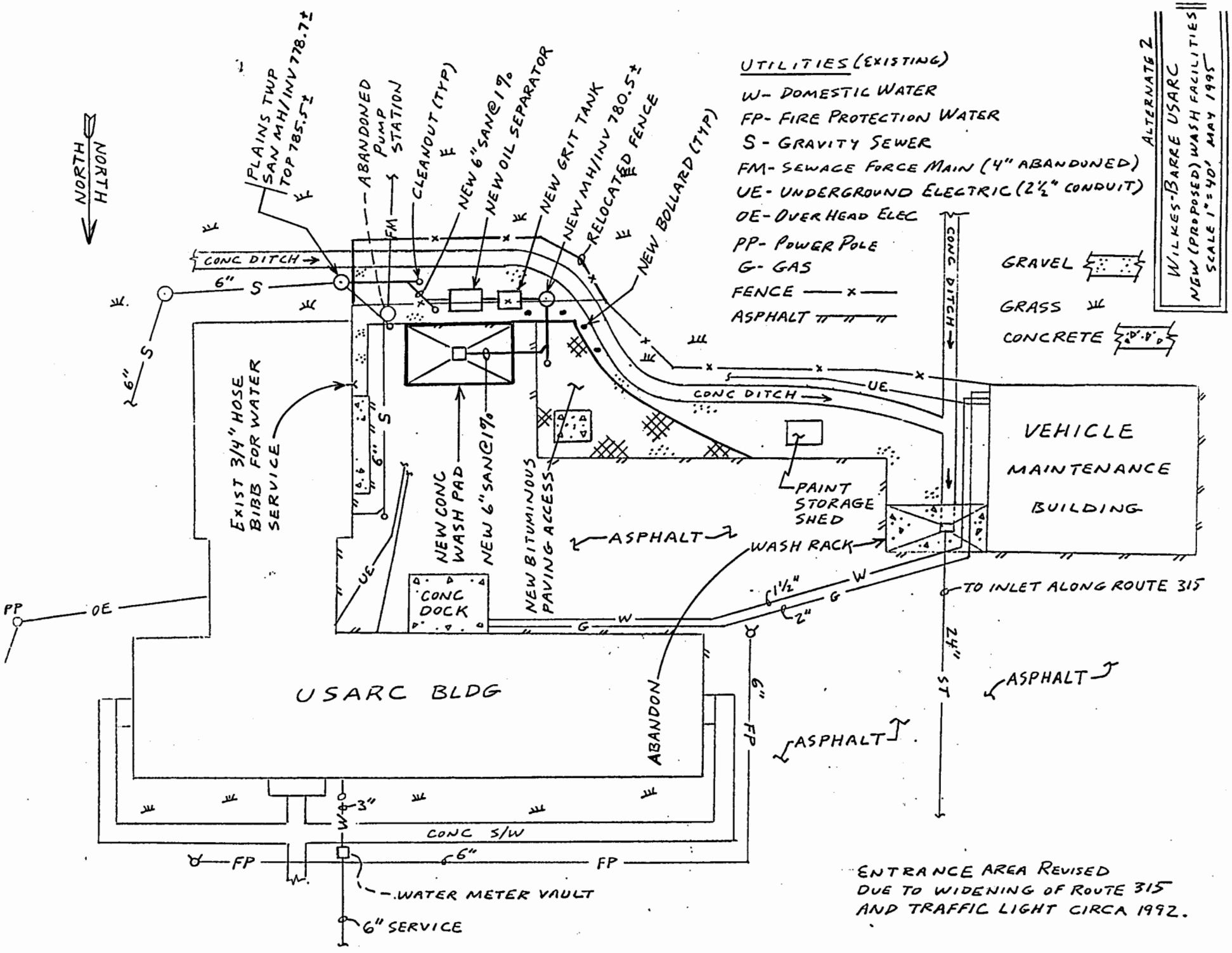
ALTERNATE 2
WILKES-BARRE USARC
NGW (PROPOSED) WASH FACILITIES
SCALE 1" = 40' MAY 1995
NORTH
UTILITIES (EXISTING)
W- DOMESTIC WATER
FP- FIRE PROTECTION WATER
S - GRAVITY SEWER
FM- SEWAGE FORCE MAIN (4" ABANDONED)
UE- UNDERGROUND ELECTRIC (2½" CONDUIT)
OE- OVER HEAD ELEC
PP- POWER POLE
G- GAS
FENCE
ASPHALT
GRAVEL
GRASS
CONCRETE
PLAINS TWP SAN MH/INV 778.7±
TOP 785.5±
ABANDONED PUMP STATION
CLEANOUT (TYP)
NEW 6" SAN @ 1%
NEW OIL SEPARATOR
NEW GRIT TANK
NEW MH/INV 780.5±
RELOCATED FENCE
NEW BOLLARD (TYP)
CONC DITCH
6"
S
FM
UE
EXIST 3/4" HOSE BIBB FOR WATER SERVICE
NEW CONC WASH PAD
NEW 6" SAN @ 1%
NEW BITUMINOUS PAVING ACCESS
ASPHALT
PAINT STORAGE SHED
WASH RACK
VEHICLE MAINTENANCE BUILDING
TO INLET ALONG ROUTE 315
1½"
2"
W
G
24"
ST
CONC DOCK
PP
OE
USARC BLDG
ABANDON
6"
FP
3"
CONC S/W
WATER METER VAULT
6" SERVICE
ENTRANCE AREA REVISED
DUE TO WIDENING OF ROUTE 315
AND TRAFFIC LIGHT CIRCA 1992.

APPENDIX G

Pedricktown, NJ

Building 404

Site Plans and Recommendations

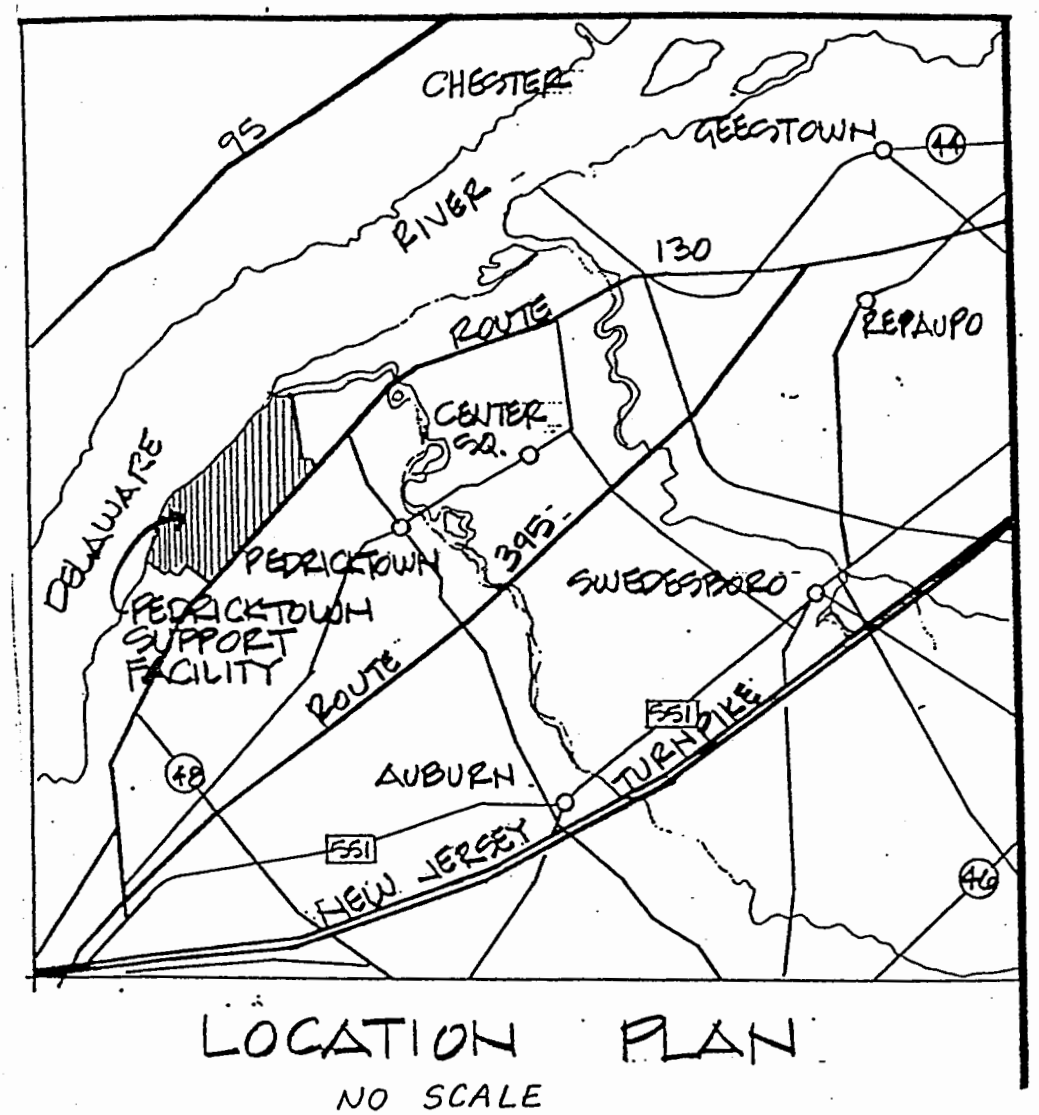

LOCATION PLAN

NO SCALE

PEDRICKTOWN USARC, NJ

LOCATION MAP

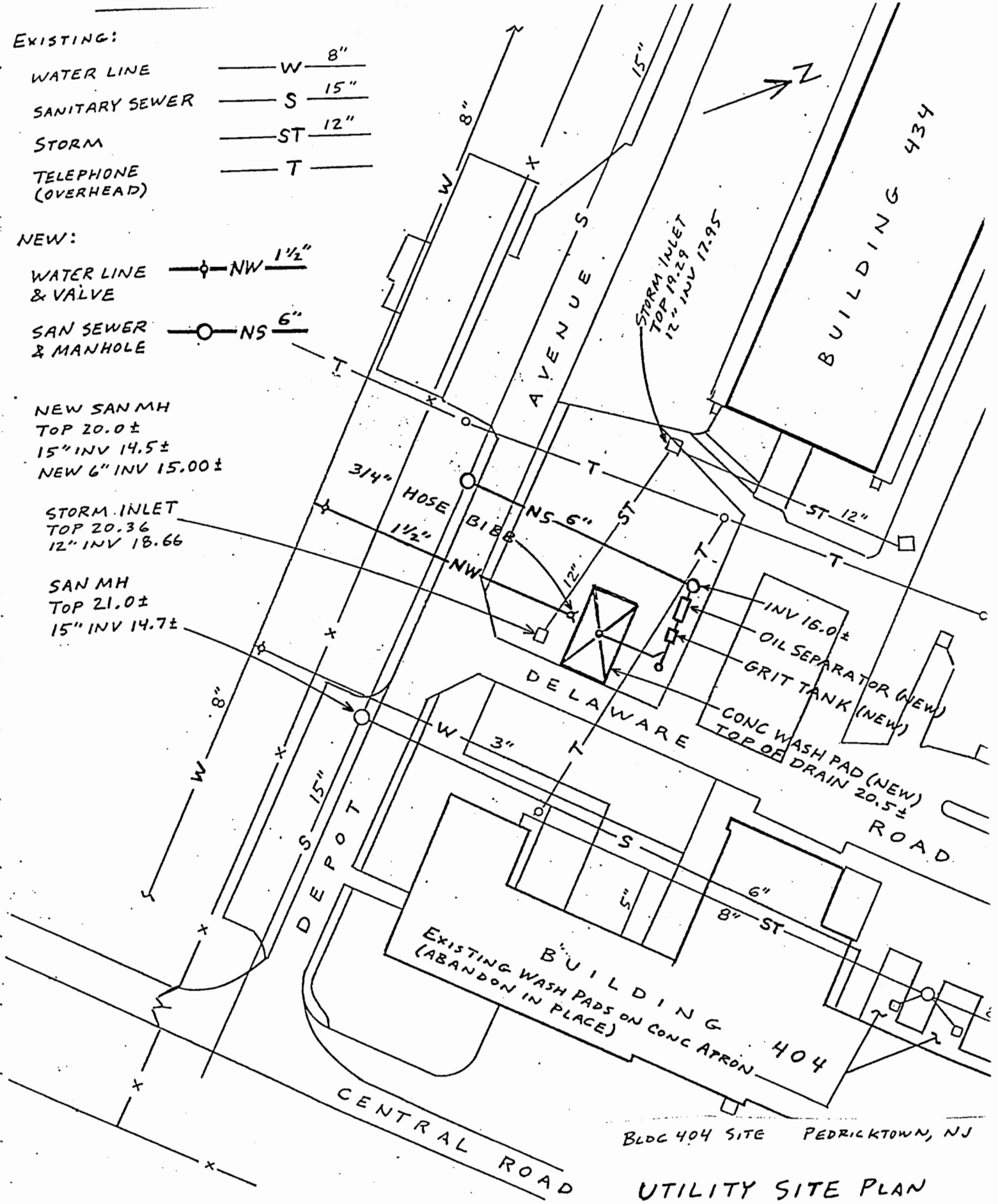

BLDG 404 SITE PEDRICKTOWN, NJ

UTILITY SITE PLAN

SCALE 1" = 50'

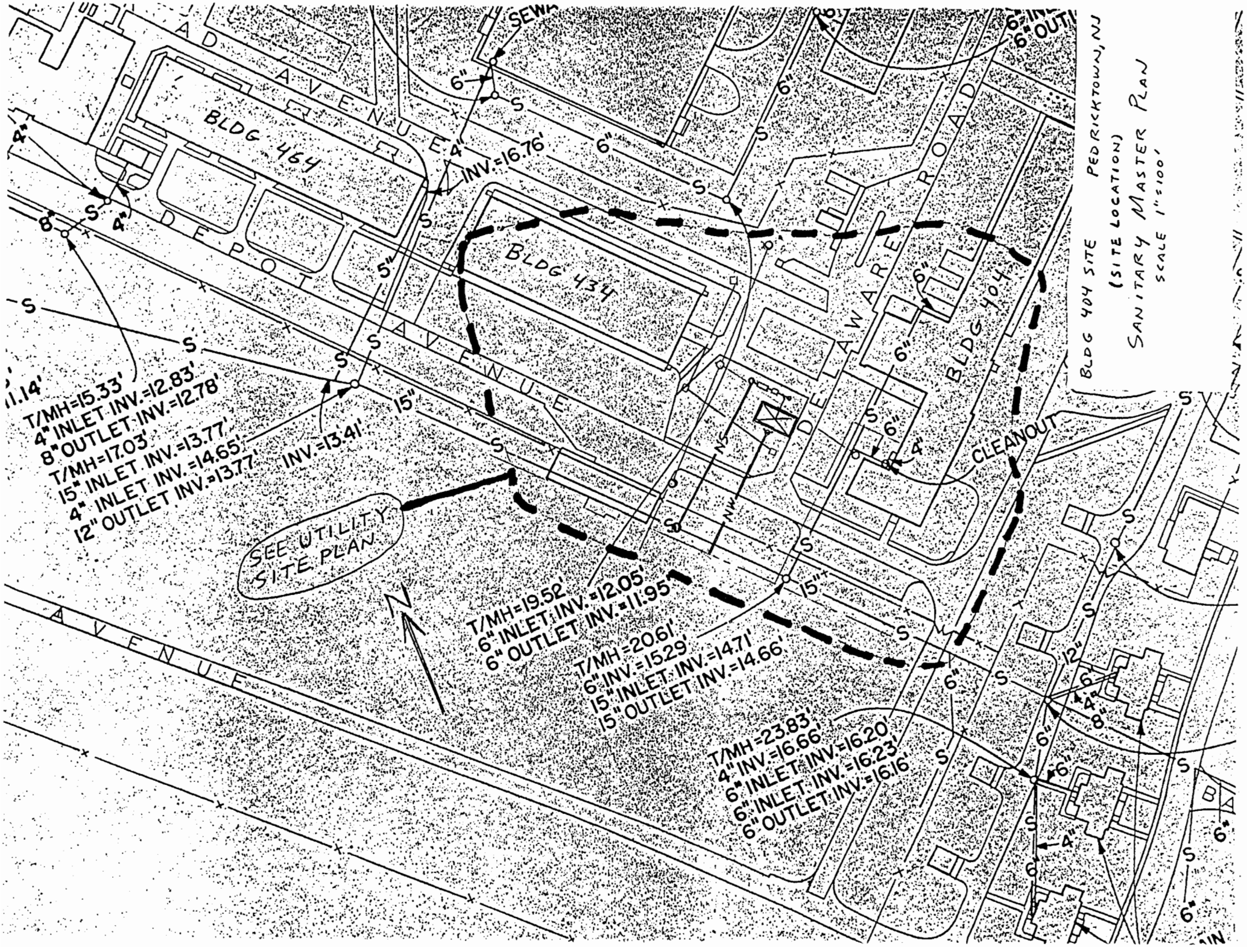
BLDG 404 SITE
(SITE LOCATION)
SANITARY MASTER PLAN
SCALE 1"=100'
PEDRICKTOWN, NJ
BLDG 464
BLDG 434
BLDG 404
DEPOT AVENUE
DELAWARE ROAD
AVENUE
SEWA
CLEANOUT
SEE UTILITY SITE PLAN
T/MH=15.33'
4" INLET INV.=12.83'
8" OUTLET INV.=12.78'
T/MH=17.03'
15" INLET INV.=13.77'
4" INLET INV.=14.65'
12" OUTLET INV.=13.77'
INV.=13.41'
INV.=16.76'
T/MH=19.52'
6" INLET INV.=12.05'
6" OUTLET INV.=11.95'
T/MH=20.61'
6" INV.=15.29'
15" INLET INV.=14.71'
15" OUTLET INV.=14.66'
T/MH=23.83'
4" INV.=16.66'
6" INLET INV.=16.20'
6" INLET INV.=16.23'
6" OUTLET INV.=16.16'
N

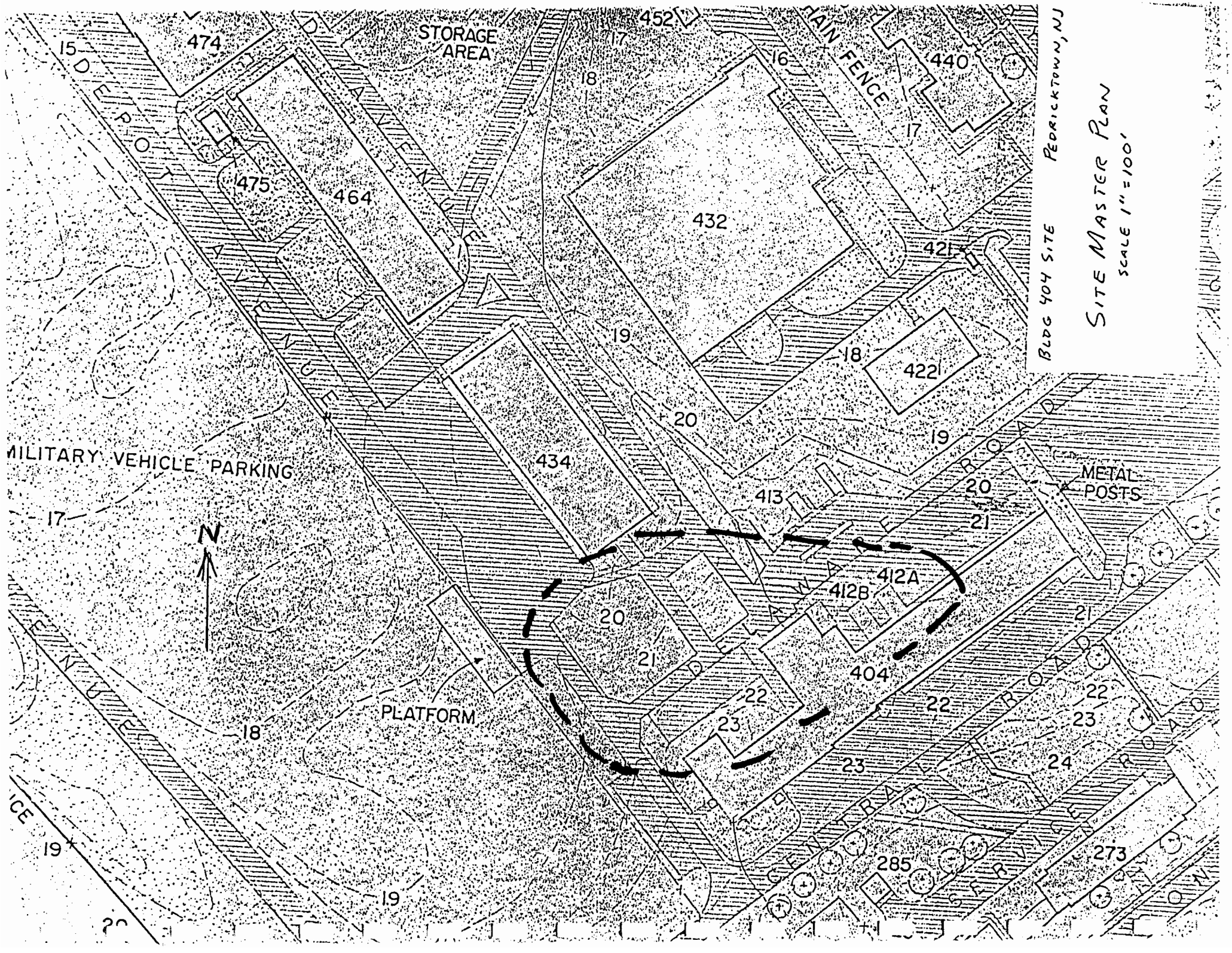
BLDG 404 SITE
PEDRICKTOWN, NJ
SITE MASTER PLAN
SCALE 1" = 100'
STORAGE AREA
MILITARY VEHICLE PARKING
PLATFORM
METAL POSTS
N
474
475
464
452
432
440
421
422
434
413
412A
412B
404
285
273
15
16
17
18
19
20
21
22
23
24

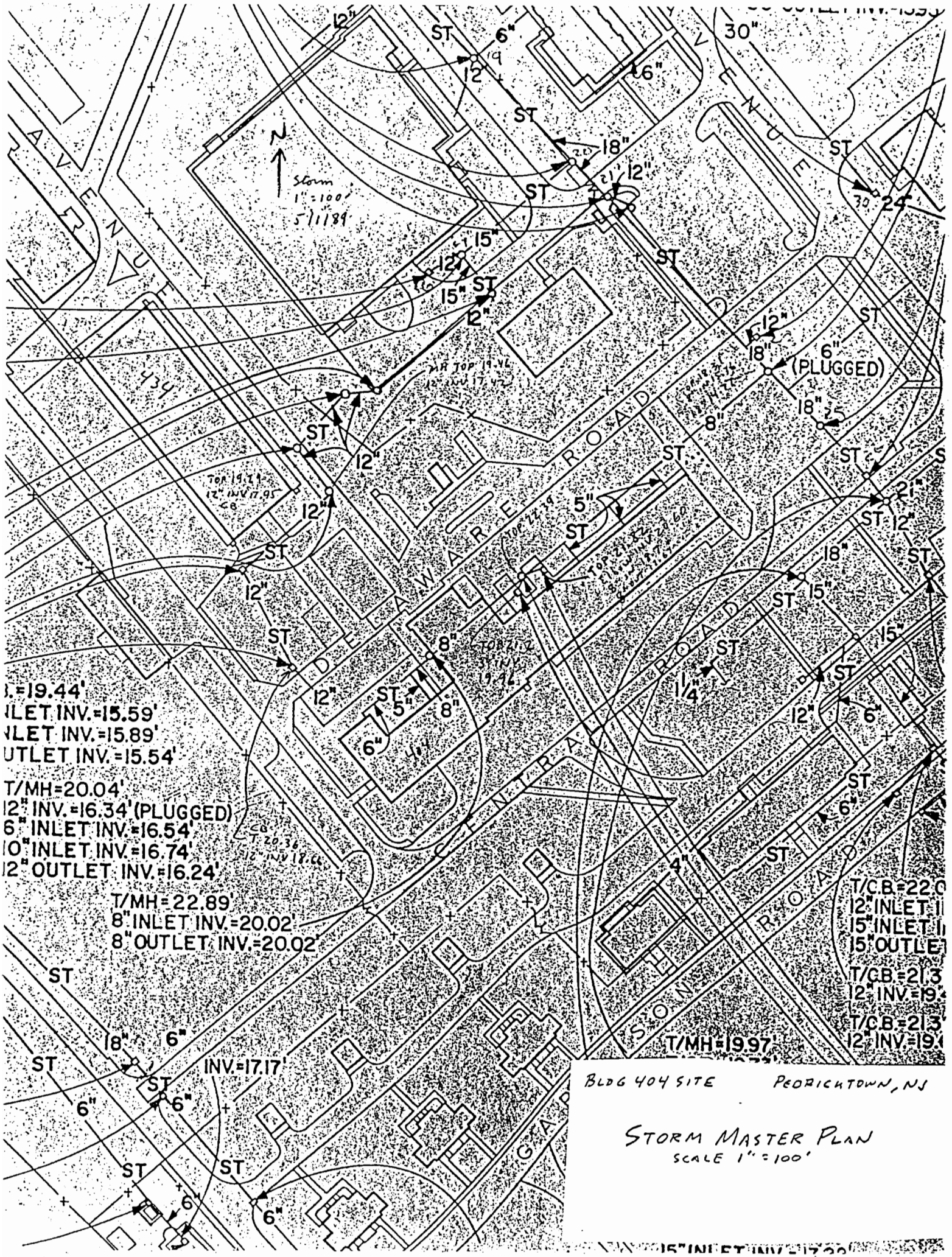

BLDG 404 SITE PEDRICKTOWN, NJ

STORM MASTER PLAN
SCALE 1" = 100'

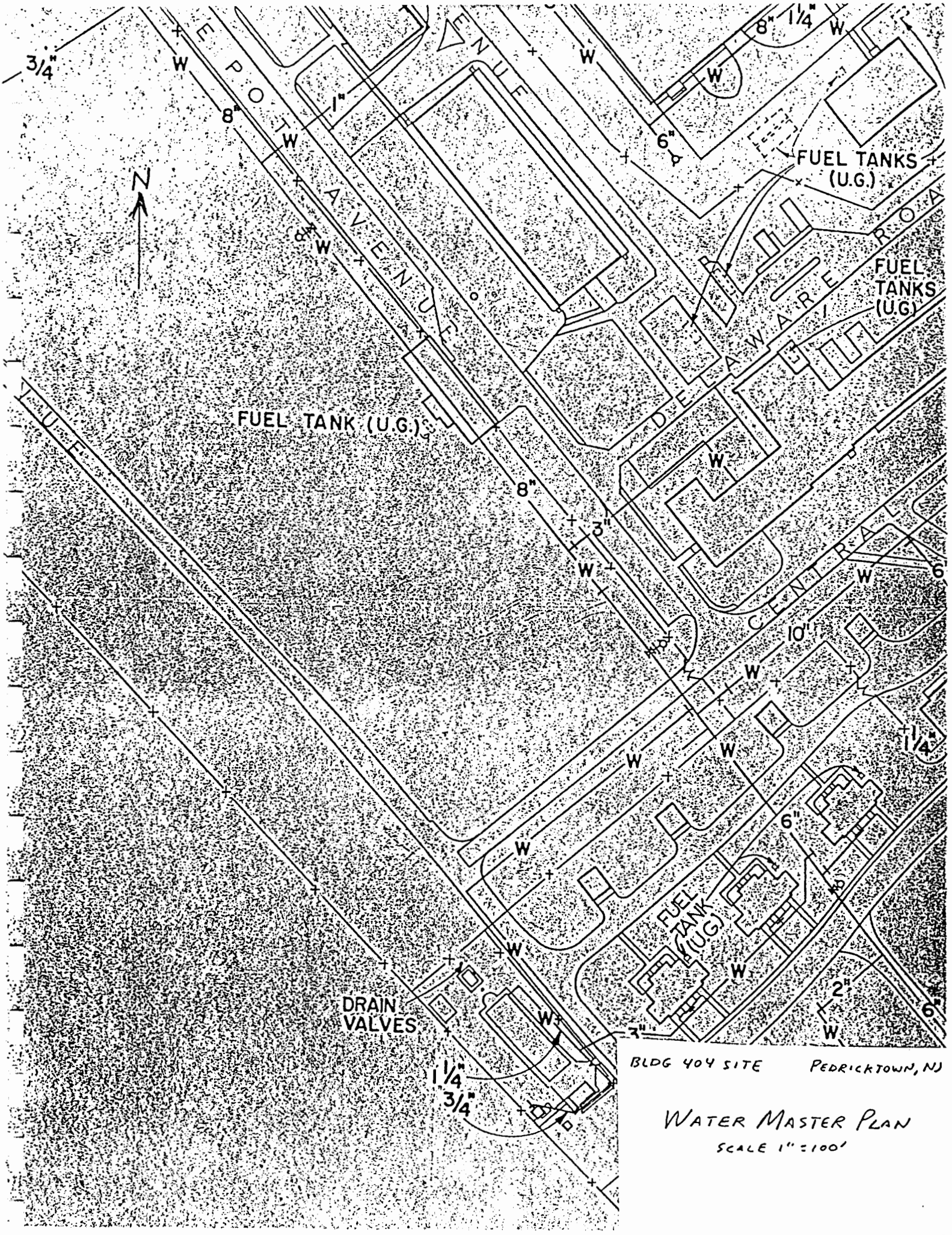
N
EPOT AVENUE
DELAWARE ROAD
CENTRAL
FUEL TANKS (U.G.)
FUEL TANKS (U.G.)
FUEL TANK (U.G.)
FUEL TANK (U.G.)
DRAIN VALVES
3/4"
8"
1"
6"
8"
1 1/4"
W
3"
10"
1 1/4"
2"
BLDG 404 SITE
PEDRICKTOWN, NJ
WATER MASTER PLAN
SCALE 1" = 100'

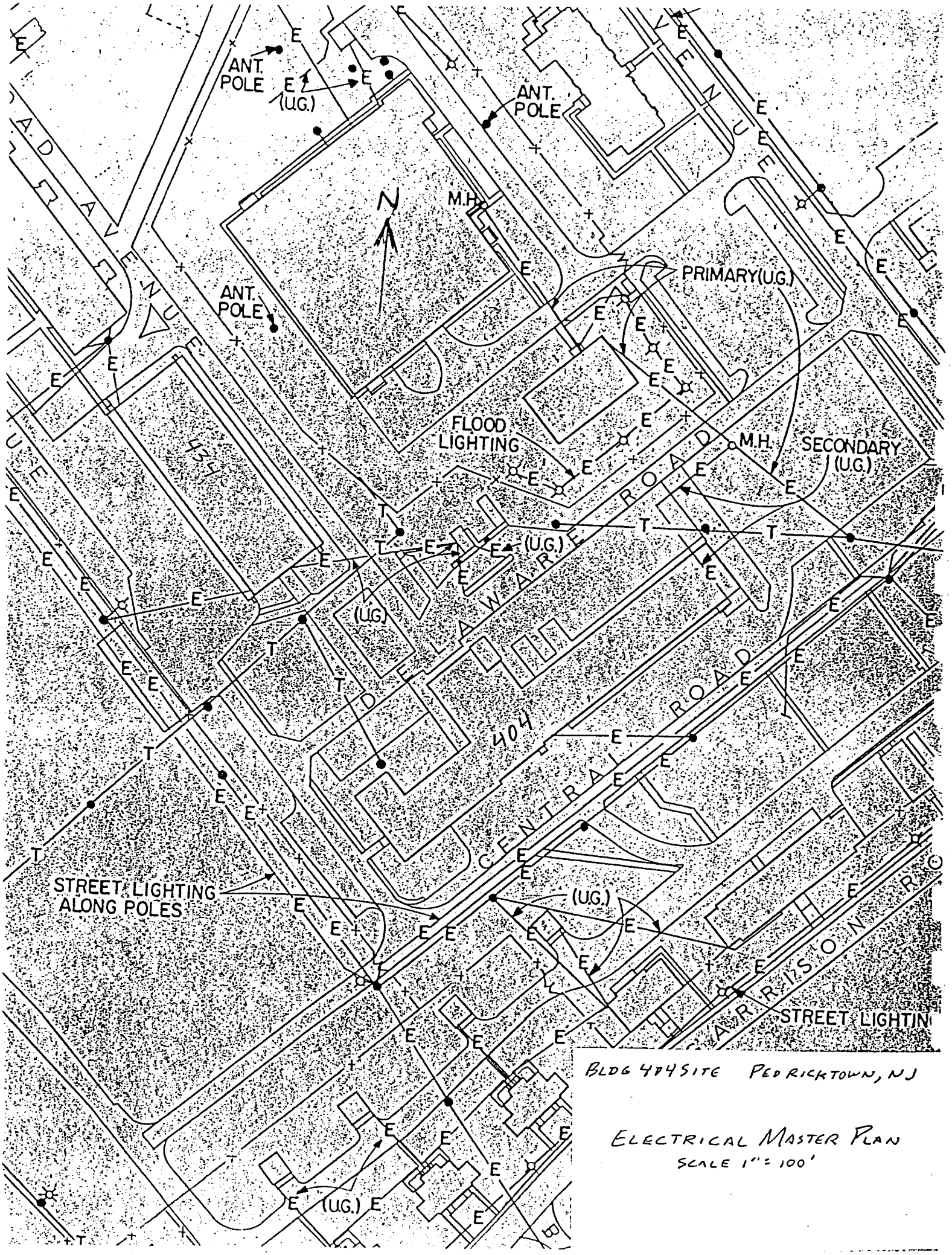
ANT. POLE
(U.G.)
ANT. POLE
ANT. POLE
N
M.H.
PRIMARY(U.G.)
FLOOD LIGHTING
M.H.
SECONDARY (U.G.)
(U.G.)
(U.G.)
404
STREET LIGHTING ALONG POLES
(U.G.)
(U.G.)
STREET LIGHTIN
BLDG 404 SITE PEDRICKTOWN, NJ
ELECTRICAL MASTER PLAN
SCALE 1" = 100'

APPENDIX H

Pedricktown, NJ

Building 506

Site Plans and Recommendations

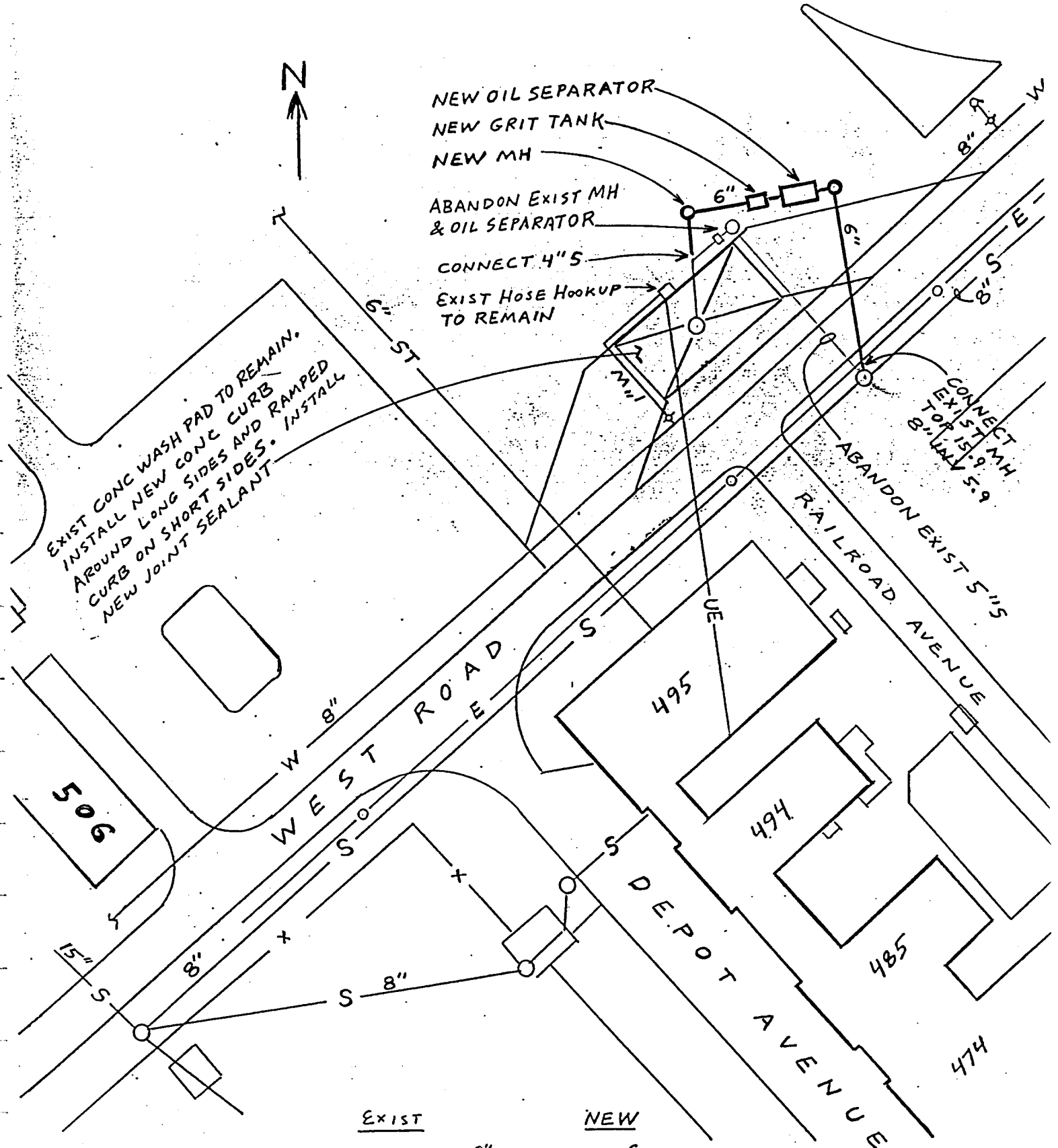

	EXIST	NEW
SANITARY SEWER	—S—○ 8"	—○ 6
WATER LINE	—W— 8"	
STORM DRAIN	—ST— 6"	
ELECTRIC (OVER HEAD)	—E—○—	
UNDERGROUND ELEC	—UE—	

BLDG 506 SITE PEDRICKTOWN, NJ

UTILITY SITE PLAN

SCALE 1" = 50'

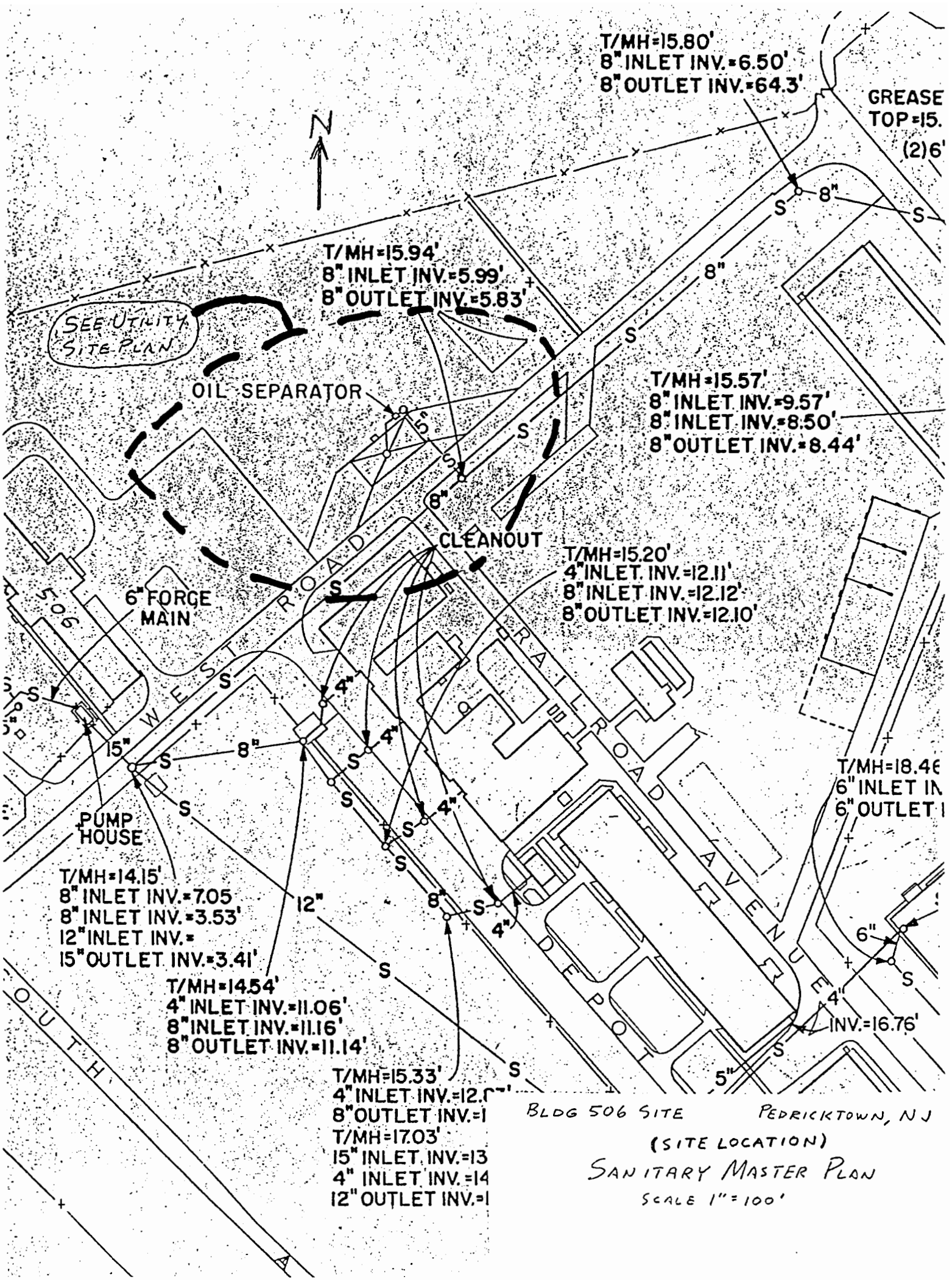
T/MH=15.80'
8" INLET INV.=6.50'
8" OUTLET INV.=64.3'
GREASE
TOP=15.
(2)6'
N
T/MH=15.94'
8" INLET INV.=5.99'
8" OUTLET INV.=5.83'
SEE UTILITY SITE PLAN
OIL SEPARATOR
T/MH=15.57'
8" INLET INV.=9.57'
8" INLET INV.=8.50'
8" OUTLET INV.=8.44'
CLEANOUT
T/MH=15.20'
4" INLET INV.=12.11'
8" INLET INV.=12.12'
8" OUTLET INV.=12.10'
6" FORCE MAIN
506
WEST ROAD
RAILROAD
DEPOT
AVENUE
PUMP HOUSE
T/MH=14.15'
8" INLET INV.=7.05
8" INLET INV.=3.53'
12" INLET INV.=
15" OUTLET INV.=3.41'
T/MH=14.54'
4" INLET INV.=11.06'
8" INLET INV.=11.16'
8" OUTLET INV.=11.14'
T/MH=15.33'
4" INLET INV.=12.0
8" OUTLET INV.=1
T/MH=17.03'
15" INLET INV.=13
4" INLET INV.=14
12" OUTLET INV.=1
T/MH=18.46
6" INLET IN
6" OUTLET
INV.=16.76'
SOUTH
BLDG 506 SITE
PEDRICKTOWN, NJ
(SITE LOCATION)
SANITARY MASTER PLAN
SCALE 1"=100'

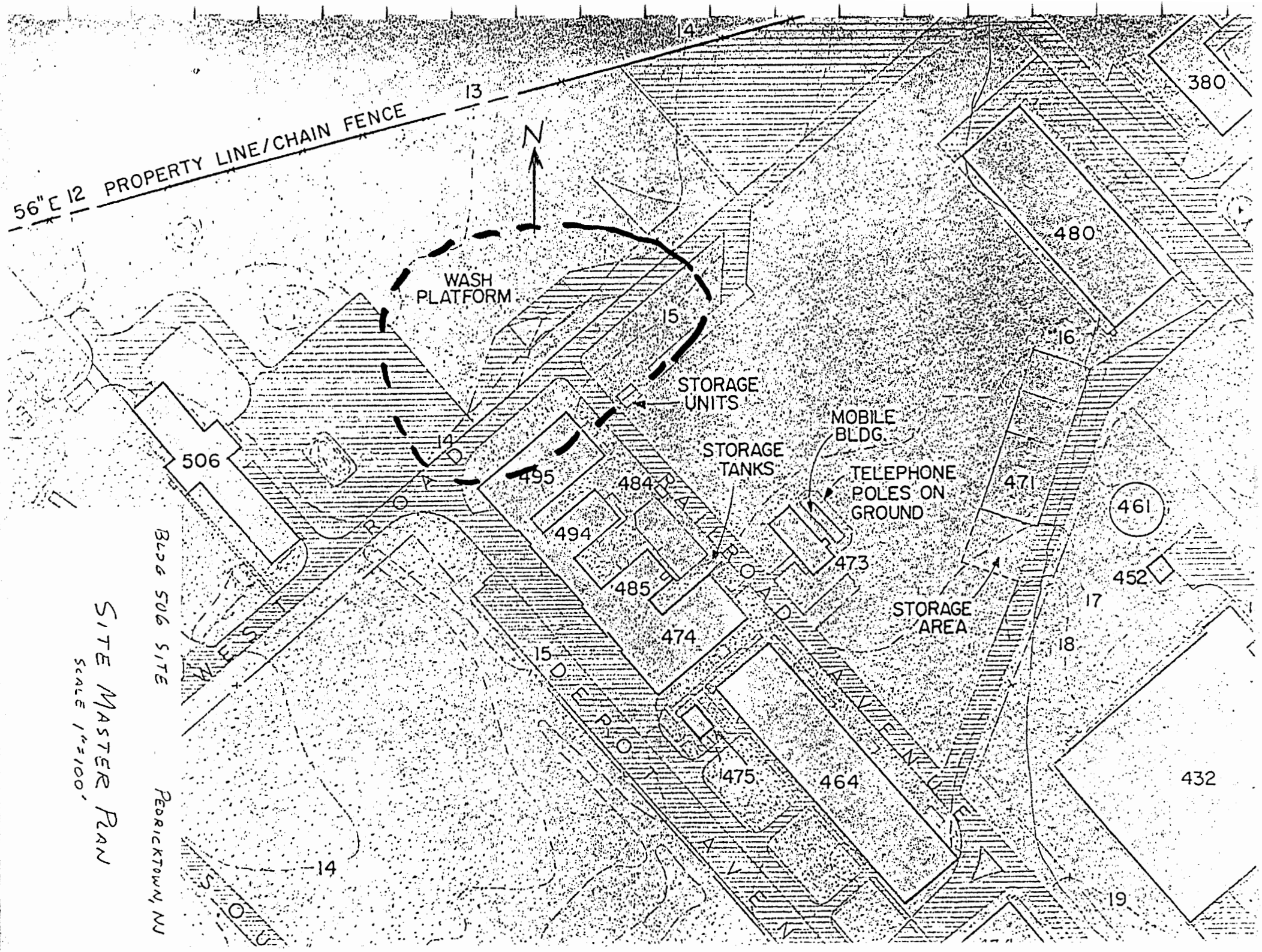

SITE MASTER PLAN
SCALE 1"=100'

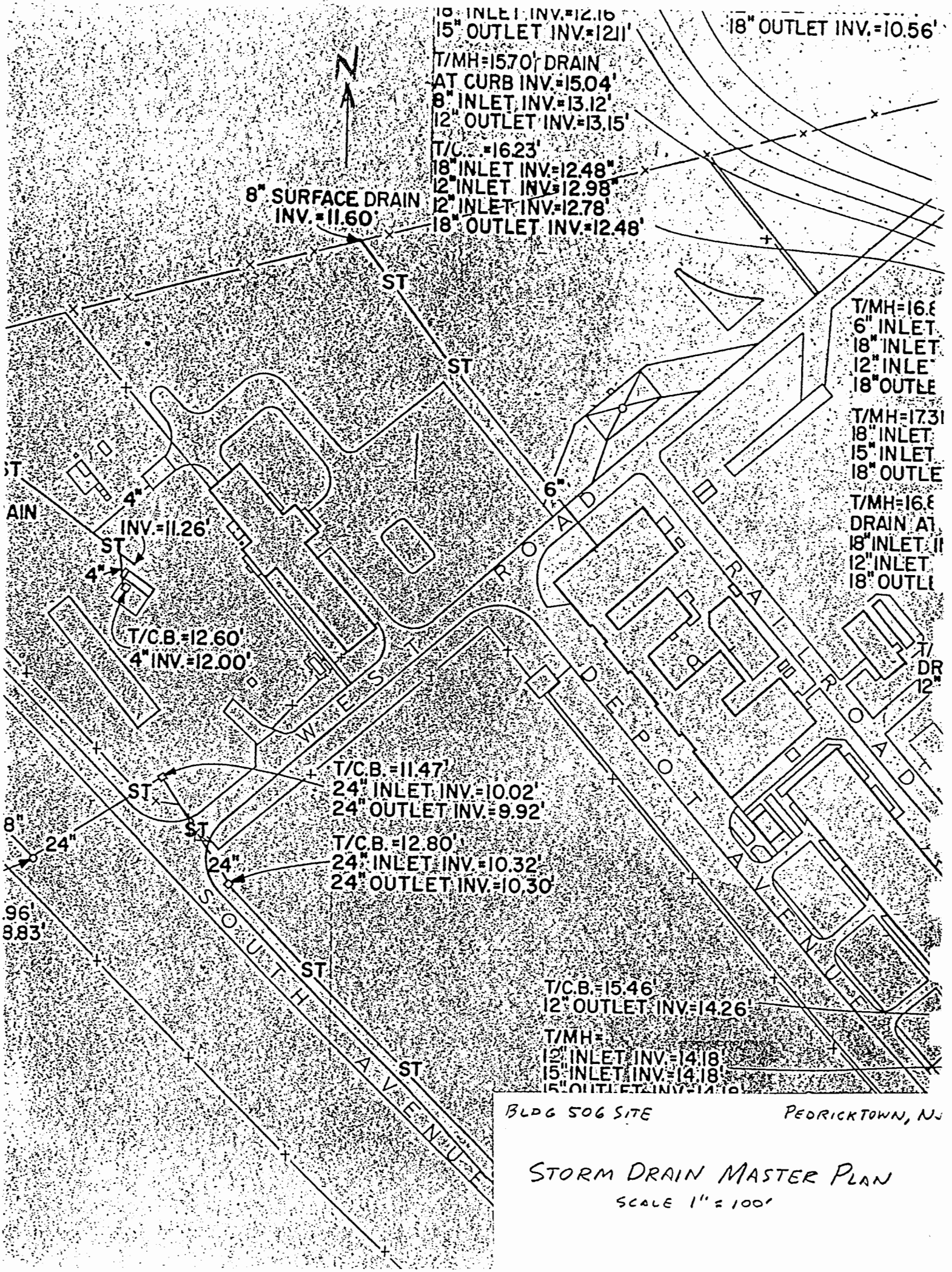
18" INLET INV.=12.16
15" OUTLET INV.=12.11'
18" OUTLET INV.=10.56'
N
T/MH=15.70' DRAIN
AT CURB INV.=15.04'
8" INLET INV.=13.12'
12" OUTLET INV.=13.15'
T/C... =16.23'
18" INLET INV.=12.48'
12" INLET INV.=12.98'
12" INLET INV.=12.78'
18" OUTLET INV.=12.48'
8" SURFACE DRAIN
INV.=11.60'
ST
ST
T/MH=16.8
6" INLET
18" INLET
12" INLE
18" OUTLE
T/MH=17.31
18" INLET
15" INLET
18" OUTLE
T/MH=16.8
DRAIN AT
18" INLET
12" INLET
18" OUTLE
6"
4"
INV.=11.26'
ST
4"
T/C.B.=12.60'
4" INV.=12.00'
WEST
ROAD
RAILROAD
DEPOT
AVENUE
T/C.B.=11.47'
24" INLET INV.=10.02'
24" OUTLET INV.=9.92'
ST
ST
24"
24"
T/C.B.=12.80'
24" INLET INV.=10.32'
24" OUTLET INV.=10.30'
SOUTH
AVENUE
ST
ST
T/C.B.=15.46'
12" OUTLET INV.=14.26'
T/MH=
12" INLET INV.=14.18'
15" INLET INV.=14.18'
BLDG 506 SITE
PEDRICKTOWN, NJ
STORM DRAIN MASTER PLAN
SCALE 1" = 100'

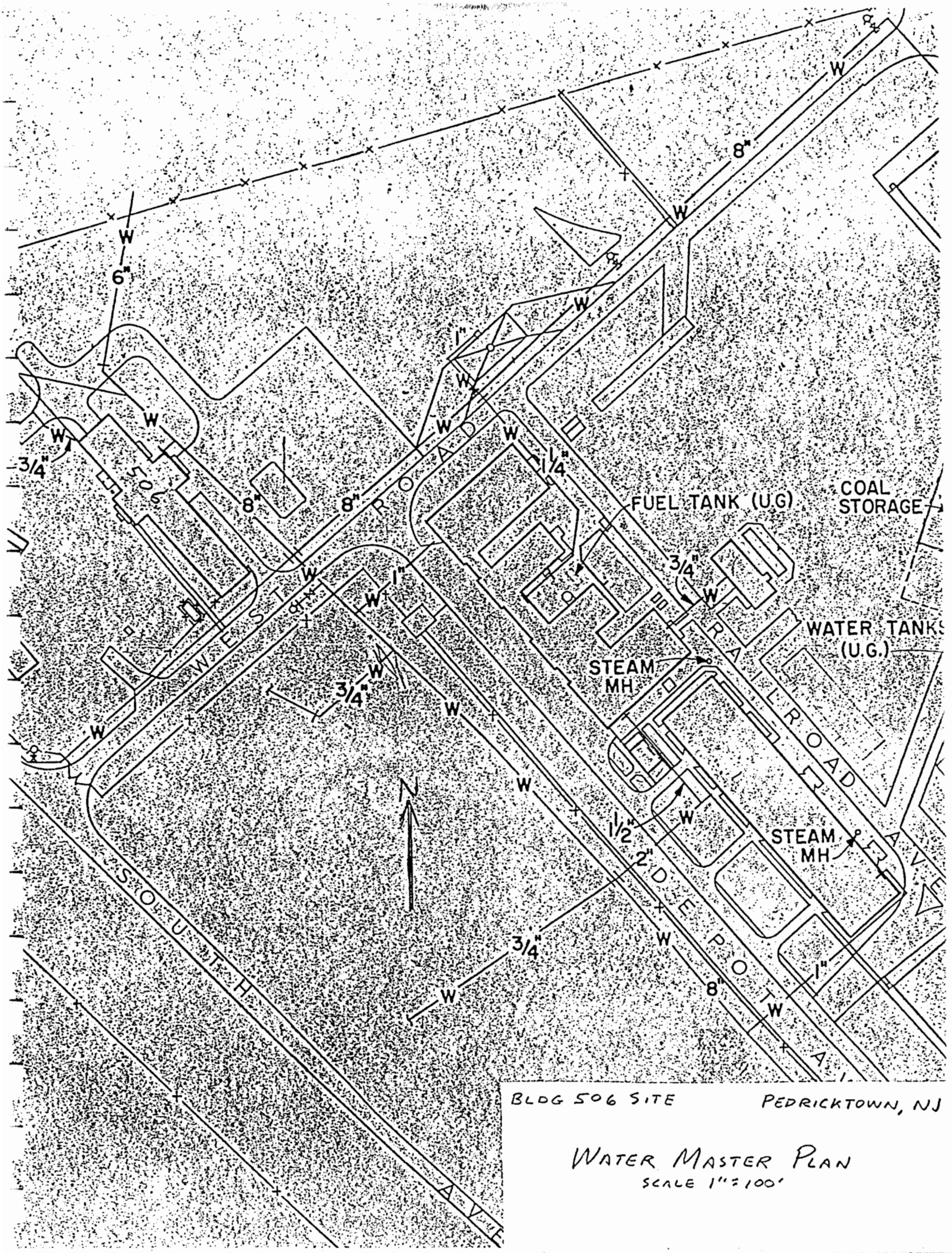
W
6"
W
3/4"
506
W
8"
8"
WEST ROAD
W
1"
W
W
1"
W
1 1/4"
FUEL TANK (U.G)
COAL STORAGE
3/4"
W
WATER TANKS (U.G.)
STEAM MH
RAILROAD
3/4"
W
W
W
N
W
1 1/2"
2"
STEAM MH
DEPOT
SOUTH
3/4"
W
W
8"
W
1"
AVE
BLDG 506 SITE
PEDRICKTOWN, NJ
WATER MASTER PLAN
SCALE 1" = 100'

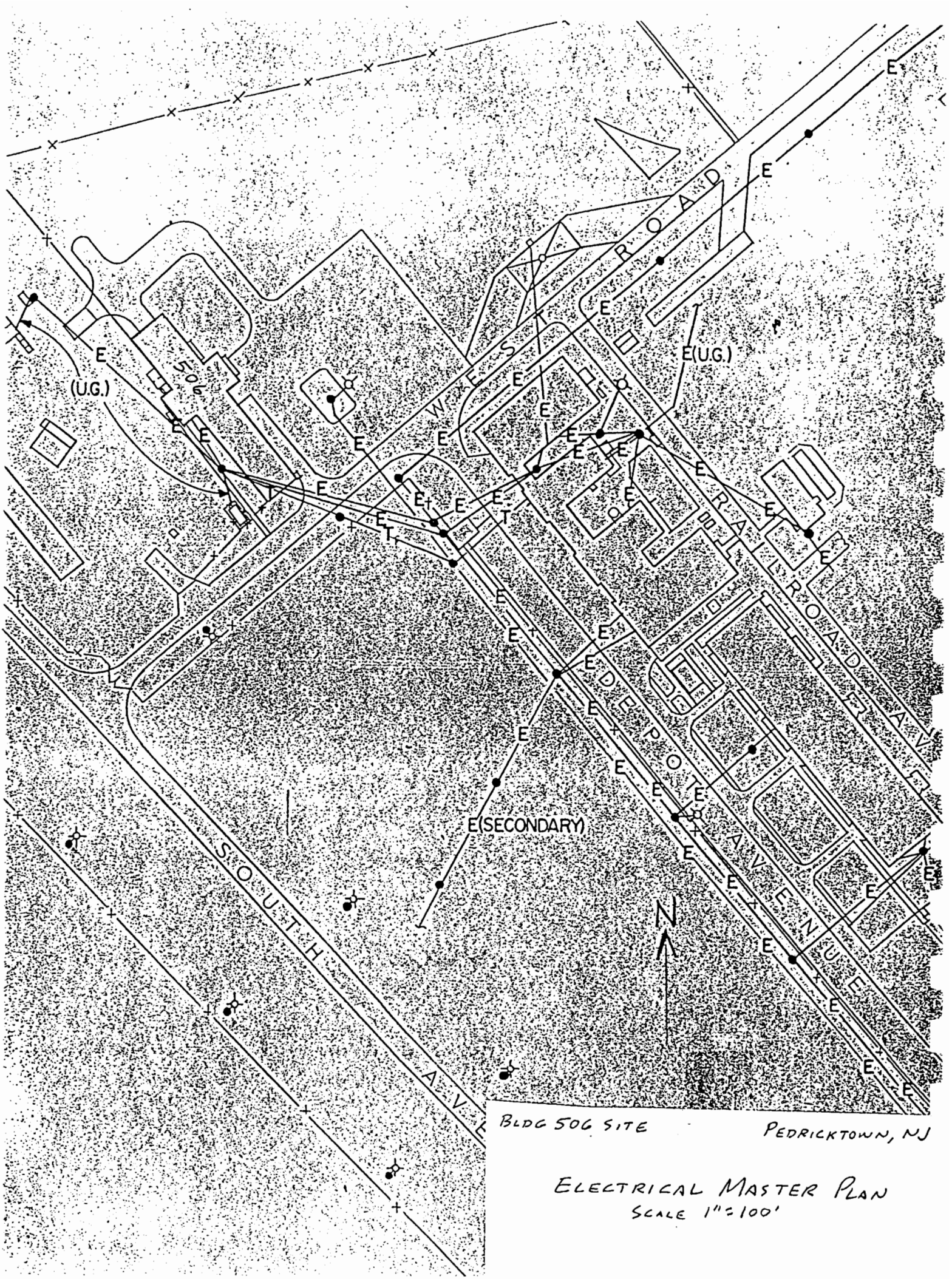
WESTON ROAD
RAILROAD AVE
DEPOT AVENUE
SOUTH AVE
506
E(U.G.)
(U.G.)
E(SECONDARY)
N
BLDG 506 SITE
PEDRICKTOWN, NJ
ELECTRICAL MASTER PLAN
SCALE 1" = 100'

APPENDIX I

Cost Estimates

Recommended Improvements (excluding canopies):

Greencastle USARC/AMSA-113, PA

Wilkes-Barre USARC, PA
- -Alternate 1
- -Alternate 2

Pedricktown, NJ - Bldg 404

Pedricktown, NJ - Bldg 506

Canopies (separate item):

Steel Columns/Wood Deck

All Steel

All Aluminum

Oil/Water Separators-79th ARCOM
Greencastle USARC/AMSA-113, PA
Wilkes-Barre USARC, PA
Pedricktown, NJ

Designed By: US Army Engineer District, Balt.
Estimated By: Cost Engineering Branch

Prepared By: Greg Reilly

Preparation Date: 06/06/95
Effective Date of Pricing: 06/06/95

Sales Tax: 6.00%

This report is not copyrighted, but the information
contained herein is For Official Use Only.

M C A C E S G O L D E D I T I O N
Composer GOLD Software Copyright (c) 1985-1994
by Building Systems Design, Inc.
Release 5.30A

The following estimate includes costs for work to be completed at the following sites:

Greencastle USARC/AMSA-113, Pennsylvania
Wilkes-Barre USARC, Pennsylvania - Alternate #2 (Alt. #1 shown below)
Pedricktown USARC, New Jersey - Bldg #404
Pedricktown USARC, New Jersey - Bldg #506

The total estimated costs (including all mark-ups, contingencies & S&A) for Alternate #1 at Wilkes-Barre and the three types of canopies are separated from the remainder of the estimate, but are summarized as follows:

Wilkes-Barre USARC, PA - Alt. #1	$ 75,000
Canopy - Type 1 - Steel Column/Wood Deck	
for 20' X 36' Wash Pad	$ 20,363
for 30' X 60' Wash Pad	$ 48,232
Canopy - Type 2 - All Steel	
for 20' X 36' Wash Pad	$ 29,225
for 30' X 60' Wash Pad	$ 69,127
Canopy - Type 3 - All Aluminum	
for 20' X 36' Wash Pad	$ 75,983
for 30' X 60' Wash Pad	$198,079

	QUANTITY UOM	CONTRACT	CONTINGN	ESCALATN	CONTINGN	EDC	SIOH	TOTAL COST	UNIT COST
B_ Greencastle USARC AMSA-113, PA		180,660	18,066	1,987	20,071	1,104	17,751	239,640	
D_ Wilkes-Barre USARC, PA (Alt #2)		72,547	7,255	798	8,060	443	7,128	96,231	
E_ Pedricktown USARC, NJ - BLDG 404		57,750	5,775	635	6,416	353	5,674	76,604	
F_ Pedricktown USARC, NJ - BLDG 506		62,887	6,289	692	6,987	384	6,179	83,418	
TOTAL Oil/Water Separators-79th ARCOM		373,845	37,385	4,112	41,534	2,284	36,733	495,893	

	QUANTITY UOM	CONTRACT	CONTINGN	ESCALATN	CONTINGN	EDC	SIOH	TOTAL COST	UNIT COST
B_ Greencastle USARC AMSA-113, PA									
B_. 1 Concrete Wash Pad with Drain	1.00 EA	3,668	367	40	408	22	360	4,866	4865.64
B_. 2 Precast Oil/Water Separator	1.00 EA	14,782	1,478	163	1,642	90	1,452	19,608	19607.63
B_. 3 Precast Grit Tank with Cover	1.00 EA	14,568	1,457	160	1,619	89	1,431	19,325	19324.57
B_. 4 Gravity Sewer Line	1.00 EA	2,210	221	24	246	14	217	2,931	2931.26
B_. 5 Pump Station	1.00 EA	29,744	2,974	327	3,305	182	2,923	39,455	39454.58
B_. 6 Valve Vault	1.00 EA	6,339	634	70	704	39	623	8,409	8408.73
B_. 7 Sewage Force Main (DUCTILE IRON)	1.00 EA	102,426	10,243	1,127	11,380	626	10,064	135,865	135865.27
B_. 8 3/4" Frostproof Hydrant	1.00 EA	1,365	136	15	152	8	134	1,811	1810.58
B_. 9 Miscellaneous Site Work	1.00 EA	5,557	556	61	617	34	546	7,372	7371.57
TOTAL Greencastle USARC AMSA-113, PA		180,660	18,066	1,987	20,071	1,104	17,751	239,640	
D_ Wilkes-Barre USARC, PA (Alt #2)									
D_. 1 Concrete Wash Pad with Drain	1.00 EA	3,668	367	40	408	22	360	4,866	4865.64
D_. 2 Precast Oil/Water Separator	1.00 EA	21,665	2,167	238	2,407	132	2,129	28,738	28738.41
D_. 3 Precast Grit Tank	1.00 EA	21,312	2,131	234	2,368	130	2,094	28,270	28270.21
D_. 4 Gravity Sewer Line	1.00 EA	2,211	221	24	246	14	217	2,933	2933.28
D_. 5 Precast Manhole	1.00 EA	1,761	176	19	196	11	173	2,336	2335.83
D_. 9 Miscellaneous Site Work	1.00 EA	11,106	1,111	122	1,234	68	1,091	14,732	14732.16
D_.10 Paving	250.00 SY	10,823	1,082	119	1,202	66	1,063	14,356	57.42
TOTAL Wilkes-Barre USARC, PA (Alt #2)		72,547	7,255	798	8,060	443	7,128	96,231	
E_ Pedricktown USARC, NJ - BLDG 404									
E_. 1 Concrete Wash Pad with Drain	1.00 EA	3,668	367	40	408	22	360	4,866	4865.64
E_. 2 Precast Oil/Water Separator	1.00 EA	21,665	2,167	238	2,407	132	2,129	28,738	28738.41
E_. 3 Precast Grit Tank with Cover	1.00 EA	14,107	1,411	155	1,567	86	1,386	18,712	18712.05
E_. 4 Gravity Sewer Line	1.00 EA	3,317	332	36	369	20	326	4,400	4399.92
E_. 5 Precast Manhole	1.00 EA	3,522	352	39	391	22	346	4,672	4671.66
E_. 8 3/4" Frostproof Hydrant	1.00 EA	2,902	290	32	322	18	285	3,849	3849.21
E_. 9 Miscellaneous Site Work	1.00 EA	7,560	756	83	840	46	743	10,028	10027.99
E_.10 Paving	15.00 SY	1,009	101	11	112	6	99	1,339	89.26
TOTAL Pedricktown USARC, NJ - BLDG 404		57,750	5,775	635	6,416	353	5,674	76,604	
F_ Pedricktown USARC, NJ - BLDG 506									
F_. 1 Upgrade Concrete Wash Pad	1.00 EA	3,279	328	36	364	20	322	4,349	4349.39
F_. 2 Precast Oil/Water Separator	1.00 EA	26,047	2,605	287	2,894	159	2,559	34,550	34549.89
F_. 3 Precast Grit Tank with Cover	1.00 EA	17,296	1,730	190	1,922	106	1,699	22,942	22941.98
F_. 4 Gravity Sewer Line	1.00 EA	2,654	265	29	295	16	261	3,520	3519.94
F_. 5 Precast Manhole	1.00 EA	3,522	352	39	391	22	346	4,672	4671.66
F_. 9 Miscellaneous Site Work	1.00 EA	9,085	909	100	1,009	56	893	12,051	12051.27

	QUANTITY UOM	CONTRACT	CONTINGN	ESCALATN	CONTINGN	EDC	SIOH	TOTAL COST	UNIT COST
F_.10 Paving	15.00 SY	1,006	101	11	112	6	99	1,334	88.94
TOTAL Pedricktown USARC, NJ - BLDG 506		62,887	6,289	692	6,987	384	6,179	83,418	
TOTAL Oil/Water Separators-79th ARCOM		373,845	37,385	4,112	41,534	2,284	36,733	495,893	

U.S. Geological Survey, Hydrologic atlas 730-L
Henry Trapp, Jr. and Marilee A. Horn, 1997

Regional summary

INTRODUCTION

Segment 11 consists of the States of Delaware, Maryland, New Jersey, North Carolina, West Virginia, and the Commonwealths of Pennsylvania and Virginia. All but West Virginia border on the Atlantic Ocean or tidewater. Pennsylvania also borders on Lake Erie. Small parts of northwestern and north-central Pennsylvania drain to Lake Erie and Lake Ontario; the rest of the segment drains either to the Atlantic Ocean or the Gulf of Mexico. Major rivers include the Hudson, the Delaware, the Susquehanna, the Potomac, the Rappahannock, the James, the Chowan, the Neuse, the Tar, the Cape Fear, and the YadkinPeedee, all of which drain into the Atlantic Ocean, and the Ohio and its tributaries, which drain to the Gulf of Mexico.

Although rivers are important sources of water supply for many cities, such as Trenton, N.J.; Philadelphia and Pittsburgh, Pa.; Baltimore, Md.; Washington, D.C.; Richmond, Va.; and Raleigh, N.C., one-fourth of the population, particularly the people who live on the Coastal Plain, depends on ground water for supply. Such cities as Camden, N.J.; Dover, Del.; Salisbury and Annapolis, Md.; Parkersburg and Weirton, W.Va.; Norfolk, Va.; and New Bern and Kinston, N.C., use ground water as a source of public supply.

All the water in Segment 11 originates as precipitation. Average annual precipitation ranges from less than 36 inches in parts of Pennsylvania, Maryland, Virginia, and West Virginia to more than 80 inches in parts of southwestern North Carolina (fig. 1). In general, precipitation is greatest in mountainous areas (because water tends to condense from moisture-laden air masses as the air passes over the higher altitudes) and near the coast, where water vapor that has been evaporated from the ocean is picked up by onshore winds and falls as precipitation when it reaches the shoreline.

Some of the precipitation returns to the atmosphere by evapotranspiration (evaporation plus transpiration by plants), but much of it either flows overland into streams as direct runoff or enters streams as base flow (discharge from one or more aquifers). The distribution of average annual runoff (fig. 2) is similar to the distribution of precipitation; that is, runoff is generally greatest where precipitation is greatest. Runoff rates range from more than 50 inches per year in parts of western North Carolina to less than 12 inches in parts of North Carolina, Virginia, and West Virginia.

Parts of the seven following physiographic provinces are in Segment 11: the Coastal Plain, the Piedmont, the Blue Ridge, the New England, the Valley and Ridge, the Appalachian Plateaus, and the Central Lowland. The provinces generally trend northeastward (fig. 3). The northeastern terminus of the Blue Ridge Province is in south-central Pennsylvania, and the southwestern part of the New England Province, the Reading Prong, ends in east-central Pennsylvania. The topography, lithology, and water-bearing characteristics of the rocks that underlie the Blue Ridge Province and the Reading Prong are similar. Accordingly, for purposes of this study, the hydrology of the Reading Prong is discussed with that of the Blue Ridge Province.

The Coastal Plain Province is a lowland that borders the Atlantic Ocean. The Coastal Plain is as much as 140 miles wide in North Carolina but narrows northeastward to New Jersey where it terminates in Segment 11 at

the south shore of Raritan Bay. Although it is generally a flat, seaward-sloping lowland, this province has areas of moderately steep local relief, and its surface locally reaches altitudes of 350 feet in the southwestern part of the North Carolina Coastal Plain.

The Coastal Plain mostly is underlain by semiconsolidated to unconsolidated sediments that consist of silt, clay, and sand, with some gravel and lignite. Some consolidated beds of limestone and sandstone are present. The Coastal Plain sediments range in age from Jurassic to Holocene and dip gently toward the ocean.

The boundary between the Coastal Plain and the Piedmont Provinces is called the Fall Line (fig. 3) because falls and rapids commonly form where streams cross the contact between the consolidated rocks of the Piedmont (fig. 4) and the soft, semiconsolidated to unconsolidated sediments of the Coastal Plain. The increase in stream gradient at the Fall Line provided favorable locations for mills and other installations that harnessed water power during the early years of the Industrial Revolution, and on most major rivers, the Fall Line coincides with the head of navigation.

The Piedmont Province is an area of varied topography that ranges from lowlands to peaks and ridges of moderate altitude and relief. The metamorphic and igneous rocks of this province range in age from Precambrian to Paleozoic and have been sheared, fractured, and folded. Included in this province, however, are sedimentary basins that formed along rifts in the Earth¹s crust and contain shale, sandstone, and conglomerate of early Mesozoic age, interbedded locally with basaltic lava flows and minor coal beds. The sedimentary rocks and basalt flows are intruded in places by diabase dikes and sills.

The mountain belt of the Blue Ridge Province forms the northwestern margin of the Piedmont in most of Segment 11. This belt consists mostly of igneous and high-rank metamorphic rocks but also includes low-rank metamorphic rocks of late Precambrian age and small areas of sedimentary rocks of Early Cambrian age along its western margin. In this report, the Reading Prong of the New England Province, which is an upland that extends from east of the Susquehanna River in Pennsylvania northeastward into New Jersey (fig. 3), is treated as part of the Blue Ridge Province. Part of the Reading Prong in Pennsylvania and New Jersey and a small part of the Piedmont Province in northeastern New Jersey have been glaciated. Glacial deposits completely or partly fill some of the valleys, and the eroding action of the glacial ice removed some of the rock from the ridges. Thus, the glaciated parts of the province have a smoother topography and less relief than other parts.

The Valley and Ridge Province is characterized by layered sedimentary rock that has been complexly folded and locally thrust faulted. As the result of repeated cycles of uplift and erosion, resistant layers of well-cemented sandstone and conglomerate form elongate mountain ridges and less resistant, easily eroded layers of limestone, dolomite, and shale form valleys. The rocks of the province range in age from Cambrian to Pennsylvanian. Parts of this province from central Pennsylvania into New Jersey have been glaciated, and glacial deposits fill or partially fill some of the valleys.

The Appalachian Plateaus Province is underlain by rocks that are continuous with those of the Valley and Ridge Province, but in the Appalachian Plateaus the layered rocks are nearly flat-lying or gently tilted and warped, rather than being intensively folded and faulted. The boundary between the two provinces is a prominent southeast-facing scarp called the Allegheny Front in most of the northern part of Segment 11 (fig. 5) and the Cumberland Escarpment in the southern part. The scarp faces the Valley and Ridge Province, and throughout most of the segment,

the eastern edge of the Appalachian Plateaus Province is higher than the ridges in the Valley and Ridge. Like parts of the Reading Prong and the Valley and Ridge Province, the northern part of the Appalachian Plateaus Province in Pennsylvania has been glaciated. In the glaciated section, the surface is mantled by glacial drift, and the valleys are partly filled with glacial deposits.

The northwestern corner of Segment 11 contains a small part of the Central Lowland Province. This flat lowland is underlain by gently dipping sedimentary rocks, some of which are the same geologic formations as those of the Appalachian Plateaus Province. The two provinces are separated by a northwest-facing scarp. Because of the small area of the Central Lowland Province within the segment and the similarity of aquifer properties with those of the glaciated part of the Appalachian Plateaus Province, the two provinces are discussed together in this report.

PRINCIPAL AQUIFERS

The rocks and unconsolidated deposits that underlie Segment 11 are divided into numerous aquifer systems, aquifers, and confining units. An aquifer system consists of two or more aquifers and can be of two types, both of which are in Segment 11. The first type consists of aquifers that are vertically stacked and hydraulically connected‹that is, the ground-water flow systems in the aquifers function in the same fashion, and a change in conditions in one of the aquifers affects the others. The Northern Atlantic Coastal Plain aquifer system is of this type. The second type consists of several aquifers that are not connected, but share common geologic and hydrologic characteristics and, accordingly, can best be studied and described together. The surficial aquifer system is of this type. The areas where each principal aquifer or aquifer system is exposed at the land surface or is the shallowest major aquifer are shown in figures 6 and 7. For purposes of this Atlas, the principal aquifers in Segment 11 (some of which include many local aquifers) have been grouped by physiographic province. The Coastal Plain Province has six aquifers that consist mostly of semiconsolidated rocks. The Piedmont and the Blue Ridge Provinces have three types of aquifers in consolidated rocks, locally overlain by unconsolidated deposits of the surficial aquifer system. The surficial aquifer system also locally overlies aquifers in two types of consolidated rocks in each of the Valley and Ridge and the combined Appalachian PlateausCentral Lowland Provinces. Some of the consolidated-rock aquifers are in more than one province; for example, limestone and dolomite aquifers are recognized in the Piedmont, the Blue Ridge, the Valley and Ridge, and the Appalachian Plateaus Provinces (fig. 7).

The aquifers and aquifer systems of Segment 11 can be grouped into three categories, depending on the degree of consolidation of the rocks and deposits that compose the aquifers. Rocks of Precambrian, Paleozoic, and early Mesozoic ages generally are consolidated; rocks of Cretaceous and Tertiary ages generally are semiconsolidated; and deposits of Quaternary age generally are unconsolidated. Some of the consolidated rocks, particularly those that underlie the Piedmont and the Blue Ridge Physiographic Provinces, are covered with unconsolidated material called regolith that is largely derived from weathering of the consolidated rocks.

Unconsolidated sand and gravel deposits that mostly occur as long, narrow bands in the northern and western parts of Segment 11 (fig. 6) compose the surficial aquifer system. Many of the sand and gravel deposits north of the limit of continental glaciation formed as glacial outwash that was deposited by meltwater from the ice sheets. Elsewhere, the sand and gravel

are stream-valley alluvium that was deposited adjacent to the principal streams in the segment. Some of the stream-valley alluvium consists of reworked glacial outwash. Unsorted, unstratified deposits called till, emplaced by the continental ice sheets, are not aquifers.

Aquifers in semiconsolidated to consolidated rocks underlie most of Segment 11 (fig. 7). These aquifers, along with confining units that separate them in some places, are described according to physiographic province. Aquifers in some of the provinces extend underground far beyond the areas where they are mapped at or near the land surface; for example, the Potomac aquifer is exposed as only a narrow band along the northwestern boundary of the Coastal Plain, but underlies most of the Coastal Plain.

The Northern Atlantic Coastal Plain aquifer system consists mostly of semiconsolidated sand aquifers separated by clay confining units. Unconsolidated sands compose the surficial aquifer, which is the uppermost water-yielding part of the aquifer system; the system also includes a productive limestone aquifer. The Coastal Plain sediments are thin near their contact with the rocks of the Piedmont Province and, in places, might not yield as much water as the underlying igneous and metamorphic rocks that are an extension of Piedmont rocks.

Aquifers in the Piedmont and the Blue Ridge Provinces and the Reading Prong are predominately in metamorphic and igneous rocks. In some topographically low areas of the Piedmont, aquifers are in carbonate rocks (limestone, dolomite, and marble) and in sandstone of early Mesozoic age that fills large basins that formed as deep rifts in the Earth¹s crust. The carbonate rocks are the most productive Piedmont and Blue Ridge aquifers.

Folded sedimentary rocks of Paleozoic age underlie the Valley and Ridge Physiographic Province. The strata consist mostly of sandstone, shale, and limestone; coal is present
in these rocks in Pennsylvania and Virginia, and they locally contain minor dolomite and conglomerate. Locally, the rocks have been metamorphosed into quartzite, slate, and marble. Carbonate rocks are the most productive Valley and Ridge aquifers.

The Appalachian Plateaus aquifers are in Paleozoic sedimentary rocks that are flat-lying or gently folded. The rocks consist mostly of shale, sandstone, conglomerate, and carbonate rocks; coal beds are in rocks of Pennsylvanian age. Most of the water-yielding beds are sandstones of Pennsylvanian and Mississippian age; Pennsylvanian coals and Permian sandstones yield water, but the Permian strata are mostly shale. Carbonate rocks of Mississippian age are also productive aquifers in many places. Small volumes of water are obtained locally from conglomerate beds of Pennsylvanian age.

GEOLOGY

Segment 11 contains two major rock types‹consolidated crystalline rocks and consolidated to unconsolidated sedimentary rocks. The crystalline rocks consist of numerous kinds of igneous and metamorphic rocks and are mostly in the Piedmont and the Blue Ridge Provinces. Consolidated sedimentary rocks are mostly in the Valley and Ridge and the Appalachian Plateaus Provinces. Sedimentary rocks in the Coastal Plain Province are mostly semiconsolidated, but some are unconsolidated. The extent of the different rock types is shown in figure 8.

The igneous and metamorphic rocks in Segment 11 crop out in a band that trends northeastward, is widest in North Carolina, and narrows northeastward (fig. 8). The band includes much of the rock of the Piedmont Province and most of the rock of the Blue Ridge Province and the Reading

Prong. The crystalline rocks generally are resistant to weathering and erosion. According to radiometric dating, the ages of the crystalline rocks range from more than 1,200 million to 196 million years before present (Precambrian to Jurassic). Even though these rocks vary greatly in mineral composition and texture, they have similar hydraulic characteristics in that they generally have almost no pore spaces between mineral grains and contain ground water in joints and fractures.

Most of the rocks that underlie Segment 11 are sedimentary rocks that can be grouped into three categories‹well-consolidated rocks of Paleozoic age, variably consolidated rocks of Triassic and Early Jurassic age in early Mesozoic rift basins, and semiconsolidated to unconsolidated rocks of Cretaceous and younger age. Unconsolidated Quaternary deposits that overlie crystalline rocks or consolidated sedimentary rocks in the northern and western parts of the segment are shown in figure 6.

Paleozoic sedimentary rocks extend from western and central Virginia through all of West Virginia, western Maryland, western and northern Pennsylvania, and a small part of northern New Jersey. Most of these rocks are exposed in the folded and thrust-faulted Valley and Ridge Province and in gently warped to flat-lying beds of the Appalachian Plateaus Province (fig. 9), but some are in the Piedmont Province of northern Maryland, eastern Pennsylvania, and northern New Jersey. ThePaleozoic sedimentary rocks consist of conglomerate, sandstone, siltstone, mudstone, shale, coal, limestone, and dolomite. The sandstone and limestone beds are the most productive aquifers in these rocks.

Lower Mesozoic (Triassic and Lower Jurassic) sedimentary rocks are in deep, elongate basins in the Piedmont Province (figs. 8 and 9). The basins formed in rifts in the Earth¹s crust and are oriented roughly parallel to the modern coast. Some incompletely mapped basins are buried beneath Coastal Plain sediments. The Newark Basin in north-central New Jersey and adjacent parts of New York and Pennsylvania is the largest early Mesozoic basin in eastern North America. The sedimentary rocks in the basins have been tilted and faulted, but are not metamorphosed and deformed to the same extent as the older rocks that surround the basins. The sedimentary rocks in the basins are primarily conglomerate, sandstone, shale, and siltstone, with minor limestone and coal. These rocks are interlayered with basalt flows and intruded by diabase dikes and sills. The conglomerate and sandstone are the most productive aquifers.

Semiconsolidated to unconsolidated sediments of Cretaceous and younger age in the Coastal Plain Province form a band that narrows toward the northeast and is parallel to the coast (fig. 8). The sediments, especially those of Cretaceous age, thicken greatly toward the coast in subsurface basins in Maryland, Delaware, and part of New Jersey but are much thinner on structurally high areas to the north and south. Most of the Coastal Plain sediments are sand, clay, and silt, with minor gravel and lignite; limestone is locally prominent, particularly in North Carolina. The sediments were deposited mostly in shallow marine environments when sea level was higher relative to the land surface than at present, or in the floodplains and deltas of rivers that drained the landmass to the north and west. The sands and limestones are the most productive aquifers.

All three categories of sedimentary rocks have been divided into numerous formations. The geologic and hydrogeologic nomenclature used in this report differs from State to State because of independent geologic interpretations and varied distribution and lithology of rock units. A fairly consistent set of nomenclature, however, can be derived from the most commonly used rock names. Therefore, the nomenclature used in this report is basically a synthesis of that of the U.S. Geological Survey, the Delaware Geological Survey, the Maryland Geological Survey, the New Jersey

Geological Survey, the North Carolina Geological Survey, the Pennsylvania Bureau of Topographic and Geologic Survey, the Virginia Division of Mineral Resources, and the West Virginia Geological and Economic Survey. Individual sources for nomenclature are listed with each correlation chart prepared for this report.

Quaternary deposits are in the extreme northern parts of all the physiographic provinces except the Coastal Plain (fig. 6). These deposits are predominately unsorted and unstratified glacial material (till) that ranges in size from clay to coarse gravel and boulders. Sand and gravel are present as outwash deposits that formed along the glacial front (the southern limit of glaciation) and as Holocene alluvium in major river valleys.

The area mapped in figure 8 contains four broad geologic categories (fig. 9). From northwest to southeast, these are: flat to gently folded Paleozoic sedimentary rocks that underlie the Appalachian Plateaus and the Central Lowland Physiographic Provinces; the same types of rocks folded into a series of anticlines and synclines in the Valley and Ridge Physiographic Province; metamorphic and igneous rocks of the Piedmont and the Blue Ridge Physiographic Provinces that contain large areas of tilted sedimentary rocks and lava flows in early Mesozoic basins, and smaller areas of faulted and folded blocks of Paleozoic sedimentary rocks that have undergone various degrees of metamorphism; and gently dipping, semiconsolidated to unconsolidated sediments of the Coastal Plain Physiographic Province. The combination of rock type and geologic structure largely determines the hydraulic properties of the rocks. These factors, plus topography and climate, determine the characteristics of the ground-water flow system throughout the mapped area.

GROUND-WATER QUALITY

The concentration of dissolved solids in ground water provides a basis for categorizing the general chemical quality of the water. Dissolved solids in ground water primarily result from chemical interaction between the water and the rocks or unconsolidated deposits through which the water moves. Rocks or deposits composed of minerals that are readily dissolved will usually contain water that has large dissolved-solids concentrations. The rate of movement of water through an aquifer also affects dissolved-solids concentrations; the longer the water is in contact with the minerals that compose an aquifer, the more mineralized the water becomes. Thus, larger concentrations of dissolved solids commonly are in water at or near the ends of long ground-water flow paths. Aquifers that are buried to great depths commonly contain saline water or brine in their deeper parts, and mixing of fresh ground water with this saline water can result in a large increase in the dissolved-solids concentration of the freshwater. Contamination as a result of human activities can increase the concentration of dissolved solids in ground water; such contamination usually is local but can render the water unfit for human consumption or for many other uses.

The terms used in this report to describe water with different concentrations of dissolved solids are as follows:

	Dissolved solids concentration, in milligrams per liter
Freshwater	Less than 1,000
Slightly saline water	1,000 to 3,000
Moderately saline water	3,000 to 10,000
Very saline water	10,000 to 35,000
Brine	Greater than 35,000

FRESH GROUND-WATER WITHDRAWALS

Ground water is the source of public supply for almost 7 million people in Segment 11, or about 19 percent of the population in the seven-State area. About 2,600 million gallons per day was withdrawn from all the principal aquifers during 1985; 33 percent of this amount was withdrawn for public supply. Withdrawals by self-supplied industries and for mining accounted for 22 percent of the total water withdrawn.

Counties with the largest withdrawals in Segment 11 generally are those that contain large population centers. Such counties include those around Pittsburgh, Pa., the Philadelphia, Pa.Camden, N.J. area; and the parts of New Jersey in the New York City metropolitan area (fig. 10). Large withdrawals are associated with mining activity in eastern North Carolina and with paper manufacturing in southeastern Virginia. Fresh ground-water withdrawals for most water-use categories increased through 1985, according to a nationwide compilation of water-use data by the U.S. Geological Survey.

The largest withdrawals of ground water, 1,029 million gallons per day, were from the Northern Atlantic Coastal Plain aquifer system, which accounted for about 40 percent of all ground-water withdrawals in the segment during 1985 (fig. 11). Withdrawals from aquifers in the Piedmont and the Blue Ridge Provinces during the same period were 634 million gallons per day. Withdrawals from aquifers in the Valley and Ridge Province were 371 million gallons per day, primarily in Pennsylvania and Virginia. Withdrawals from unconsolidated sand and gravel aquifers of the surficial aquifer system were 320 million gallons per day. In the Appalachian Plateaus Province, withdrawals were 282 million gallons per day, most of which was withdrawn in Pennsylvania and West Virginia.

Surficial aquifer system

INTRODUCTION

The surficial aquifer system is in the northern and western parts of Segment 11 (fig. 12) and consists of aquifers in unconsolidated sand and gravel deposits of Quaternary age. The aquifer system is in parts of all the physiographic provinces in the segment except the Coastal Plain. Most of the individual aquifers that compose the system are not hydraulically connected, but share common geologic and hydrologic characteristics and are therefore considered to be an aquifer system. Unconsolidated sand and gravel deposits that are the uppermost aquifers in parts of the Coastal Plain in Segment 11 are not mapped as part of the surficial aquifer system because they function as part of the Northern Atlantic Coastal Plain aquifer system.

Two principal types of unconsolidated sediments compose the surficial aquifer system. The first, and most widespread, type consists of sediments deposited by Pleistocene continental glaciers or by meltwater from the glaciers. The second type is Holocene alluvium in the valleys of major streams. The glacial sediments are restricted to the northern parts of Pennsylvania and New Jersey; the alluvial deposits are scattered through parts of West Virginia, Pennsylvania, and New Jersey (fig. 12). Some of the alluvial deposits are reworked glacial sediments.

HYDROGEOLOGIC SETTING

Glacial deposits consist mostly of clay, silt, sand, and gravel in various combinations, but also include cobbles and boulders. The general term ³glacial drift² is used for all types of glacial deposits, regardless of the particle size or the degree of sorting of the deposits, or how the

deposits were emplaced. The glacial drift in Segment 11 was deposited during several advances and retreats of continental ice sheets. The most recent and widespread glacial stage, termed ³Wisconsinan,² ended only about 12,000 years ago; the last ice sheet, however, retreated out of the area of Segment 11 about 17,000 years ago.

Glacial ice and meltwater from the ice laid down several different types of deposits. Till, which is an unstratified, unsorted mixture of material that ranges in particle size from clay to boulders, was deposited under the ice or directly in front of the ice sheet. Deposits of till are the most extensive glacial deposits in Segment 11, but the till is not an aquifer. Glacial-lake deposits of clay and silt, which were laid down in lakes that formed between ice lobes or where the ice blocked pre-glacial streams, likewise are not aquifers. Outwash deposits, by contrast, generally consist of stratified sand and gravel (fig. 13) that form productive aquifers. Most of the outwash deposits in Segment 11 are in valleys; the intervening hills are mantled with till or underlain by consolidated rock. The ice sheets greatly altered topography and drainage in the part of the segment that has been glaciated. Before or during the Pleistocene Epoch, some streams in the glaciated area cut their channels as much as 300 feet deeper than their present streambeds. In some places, erosion of bedrock hills by the thick ice sheets smoothed and rounded the preglacial topography and deposition of glacial drift, primarily in bedrock valleys, further subdued the original relief of the bedrock surface. In other places, the ice scoured deep troughs in the bedrock and stripped weathered bedrock away from hills, thus increasing the original relief.

Streams that flowed northward or northwestward typically were blocked by the ice sheets that advanced from the north and northeast. Flow direction was reversed in some of the north-flowing streams; others resumed their northward flow after the ice retreated; and a few were overridden by thick ice and permanently obliterated. New channels were cut by meltwater streams in some places, and some of these new channels connected parts of separate preglacial streams. The present course of the Ohio River was formed during the Pleistocene Epoch as a composite of newly cut channel segments and connected, old channel segments. Some of the deeply cut meltwater stream valleys were later filled to their present levels with glacial deposits and alluvium.

In areas where streams drained away from the glacial ice, stratified glacial drift was deposited in the stream valleys, mostly when the ice was stagnant or when the ice sheet was melting. Sand and gravel were deposited (fig. 14) as deltas or fluvial deposits at the ice margins or in glacial lakes or as fluvial valley-train deposits downstream from the ice margin. The coarse sand and gravel form productive aquifers that commonly are interspersed with the clay and silt confining beds deposited in small lakes in the valleys. Some of the valley-train sand deposits extend for many miles, as in parts of the valleys of the Allegheny and the Susquehanna Rivers.

Sand and gravel deposited as alluvium along the valleys of major streams also form productive aquifers. Some of the alluvium consists of reworked glacial deposits that were eroded and transported downstream during and following the last retreat of the ice. Reworked glacial material is most common in southward-flowing streams, such as the Allegheny and the Ohio Rivers, that have their headwaters in glaciated areas. Although some of the deposits of reworked glacial material are in dry terraces above the water table, most of them are saturated, and some, such as the gravel deposits along the upper reaches of the Ohio River, form highly productive aquifers. Alluvium in the valleys of northward-flowing streams consists of

material that has been weathered and eroded from exposed consolidated sedimentary rocks. The alluvium along the northward-flowing rivers, such as the Kanawha in West Virginia and the Monongahela in Pennsylvania, generally is finer grained than that along the southward-flowing rivers and thus yields less water to wells.

GROUND-WATER FLOW

Most of the productive aquifers in the surficial aquifer system consist of valley-fill deposits of coarse-grained glacial or alluvial deposits, or both, and contain water under mostly unconfined conditions. In New Jersey, fine-grained glacial-lake sediments overlie aquifers in coarse-grained glacial sediments in many places and create confined conditions in the aquifers. The valley-fill aquifers receive most of their recharge from runoff of precipitation that falls on the surrounding uplands that are underlain by till or bedrock, both of which are less permeable than the valley-fill deposits. Some recharge is by infiltration of precipitation that falls directly on the valley-fill aquifers, and some is by inflow from adjacent bedrock (fig. 15A). Studies have concluded, however, that from 60 to 75 percent of the recharge to the valley-fill aquifers is from upland runoff, some of which is unchanneled, but most of which is in tributary streams and enters the aquifers as seepage through the streambeds. The higher recharge percentages are for aquifers in valleys that are less than one-half mile wide. The valley-fill aquifers discharge primarily to streams that flow in the valleys when the water level in the aquifer is higher than that in the stream (fig. 15A); during drought conditions, water levels in the aquifer can decline until the direction of flow is reversed and water moves from the stream to the aquifer (fig. 15B). The thickness and permeability of the bottom sediment in the stream determine the rate at which water can move between the stream and the aquifer. Some discharge from the valley-fill aquifers also is by outflow to adjacent bedrock, evapotranspiration, and withdrawals from wells (fig. 15B).

Base flow of a stream is maintained by ground-water discharge and is a good indication of the water-yielding capacity of the aquifer that provides the base flow. Base-flow characteristics in Segment 11 vary with the type of rocks or deposits through which the stream flows. Streams that flow on bedrock have minimal base flow and often become dry because the limited amount of fracture and pore space in the bedrock permits little water to be stored and subsequently released to the stream. In contrast, streams in valleys partly filled with glacial outwash and bordered by bedrock that is covered with till have large, sustained base flow because thick glacial deposits can store and slowly release large quantities of water even where they consist of low-permeability till. Base flow has been estimated by some studies to account for more than 70 percent of the total runoff in the glaciated parts of the Appalachian Plateaus Province but accounts for only about 50 percent of the total runoff in the unglaciated parts of the province.

POTENTIAL WELL YIELDS

The considerable variation in potential yields of wells completed in the aquifers of the surficial aquifer system from place to place depends on the saturated thickness of the unconsolidated sediment, its coarseness, degree of sorting, and extent. Sustained well yields are dependent on recharge rates. Adequate recharge usually is not a problem because most of the aquifers are in the valleys of perennial streams from which flow to wells can be induced, especially if the wells are located near the streams.

The principal aquifers of the surficial aquifer system in New Jersey consist of glacial deposits of sand and gravel that partly fill bedrock valleys. Overlying till or glacial-lake deposits of silt commonly confine the aquifers, although they are unconfined in places. The combined thickness of coarse- and fine-grained valley-fill material is as much as 350 feet in some valleys. Yields of most large-diameter wells range from 130 to 800 gallons per minute, but some wells yield as much as 2,200 gallons per minute.

In northeastern Pennsylvania, yields from wells completed in glacial-deposit aquifers are about 400 to 750 gallons per minute near the confluence of the Lehigh and the Delaware Rivers. Elsewhere in the area, wells completed in the same type of material yield as much as 1,300 gallons per minute.

In western Pennsylvania, reported yields of wells completed in glacial gravels and alluvium along the Allegheny and the Ohio Rivers, stratified drift along other streams, and abandoned, filled channels within the glaciated area generally range from 200 to 1,200 gallons per minute. Locally, however, yields of as much as 2,000 gallons per minute have been reported, and along the West Branch of the Susquehanna River in west-central Pennsylvania, a few wells yield 1,000 to 3,000 gallons per minute. Wells located on alluvial terraces along north-flowing streams south of the limits of glaciation yield only 5 to 10 gallons per minute.

In West Virginia, the valleys of north-flowing tributaries of the Ohio River contain as much as 75 feet of alluvium; however, only the lower part of the alluvium is saturated. Yields of wells completed in the alluvium are as much as 105 gallons per minute along the Little Kanawha River and 150 gallons per minute along the Kanawha River. Along the Ohio River, yields of 100 to 1,000 gallons per minute are reported from standard vertical wells completed in the alluvium. Yields from collector wells, which are bored or excavated horizontally, can be even higher.

GROUND-WATER QUALITY

The chemical quality of water in the aquifers of the surficial aquifer system is somewhat variable but generally is suitable for municipal supplies and most other purposes. Most of the water in the upper parts of the aquifers is not highly mineralized.

With the exception of local limestone and dolomite gravel in glacial deposits, the unconsolidated sand and gravel aquifers of the surficial aquifer system consist primarily of siliceous material, which is not very soluble. Furthermore, the aquifers are at or near the land surface and commonly are thin. Much of the recharge water enters the aquifers as runoff from adjacent highlands or directly from precipitation on the aquifers and the residence time of the water in the aquifer is generally short. The net effect of these factors is that the water contains little dissolved mineral material and has an average dissolved-solids concentration of about 250 milligrams per liter. Because hardness (caused principally by calcium and magnesium ions) averages about 140 milligrams per liter, the water is classified as hard. The median hydrogen ion concentration, which is measured in pH units, is 7.2. Thus, the water is slightly basic, because of the dissolution of calcium and magnesium carbonate, which raises the pH. The water is a calcium bicarbonate type (fig. 16).

Chloride concentrations average about 29 milligrams per liter but locally are as much as 1,200 milligrams per liter. Sulfate concentrations also average about 29 milligrams per liter but are as much as 670 milligrams per liter. Large concentrations of chloride and sulfate in the

unconsolidated sand and gravel aquifers might be due to discharge from underlying bedrock aquifers that contain highly mineralized water.
The median iron concentration is 100 micrograms per liter, but concentrations of as much as 552,000 micrograms per liter have been measured. Locally, large concentrations of nitrate are probably the result of surface contamination by fertilizers, animal wastes, or sewage. Shallow aquifers, such as those of the surficial aquifer system, are particularly vulnerable to contamination.

FRESH GROUND-WATER WITHDRAWALS

Total freshwater withdrawals from unconsolidated sand and gravel aquifers of the surficial aquifer system in the Piedmont, the Blue Ridge, the Valley and Ridge, the Appalachian Plateaus, and the Central Lowland Provinces of Segment 11 were estimated to be 320 million gallons per day during 1985. About 140 million gallons per day was used for domestic and commercial purposes, and about 102 million gallons per day was withdrawn for public supply (fig. 17). Industrial, mining, and thermoelectric power uses accounted for withdrawals of about 62 million gallons per day. About 16 million gallons per day was withdrawn for agricultural use.

Northern Atlantic Coastal Plain aquifer system

INTRODUCTION

The Northern Atlantic Coastal Plain aquifer system consists of six regional aquifers in sedimentary deposits that range in age from Early Cretaceous to Holocene. The aquifer system underlies an area of about 50,000 square miles in Segment 11 and extends from the North CarolinaSouth Carolina State line northward to Raritan Bay, N.J. (fig. 18). The western limit of the aquifer system is the landward edge of water-yielding Coastal Plain strata where they pinch out against crystalline rocks of the Piedmont Physiographic Province at the Fall Line. Although the aquifers included in the aquifer system extend beneath the Atlantic Ocean and, in places, contain brackish water or freshwater under nearshore parts of the Continental Shelf, the eastern limit of the aquifer system is, for all practical purposes, the shoreline. The Northern Atlantic Coastal Plain aquifer system grades southward into the Southeastern Coastal Plain aquifer system, which is described in Segments 5 and 6 of this Atlas; the part of the coastal plain that underlies Long Island is described in Segment 12.

The northern part of the Atlantic Coastal Plain is underlain by a wedge-shaped mass of semi-consolidated to unconsolidated sediments that thickens toward the ocean and restson a surface of crystalline rock (fig. 19). The thickness of the sediments shown in figure 19 at the New Jersey coastline is about 4,000 feet, but the sediments attain thicknesses of as much as 8,000 feet along the coast of Maryland and 10,000 feet along the coast of North Carolina. The sediments consist of lenses and layers of clay, silt, and sand, with minor amounts of lignite, gravel, and limestone. The sand, gravel, and limestone compose aquifers of varying extent; some are traceable over long distances, whereas others are local. The aquifers are separated by confining units of clay, silt, and silty or clayey sand. Although water moves more readily through the aquifers than through the confining units, water can leak through the confining units, especially where they are thin or where they contain sand; the aquifers, therefore, are hydraulically interconnected to some degree.

The aquifers and confining units that underlie the Coastal Plain vary considerably in thickness (fig. 20). Much of this variation is because the sediments that contain these hydrologic units were deposited on an

irregular crystalline-rock surface that was warped by tectonic forces so as to form arches that alternate with troughs or embayments. The three areas where the crystalline rock is arched upward in figure 20 are, from left to right, the Cape Fear Arch and the Norfolk and the South New Jersey Highs. The intervening downwarped areas, from left to right, are the Albemarle and the Salisbury Embayments. The arches were not always upwarped, however, nor were the embayments always downwarped. For example, the sediments that compose the Peedeeupper Cape Fear aquifer are thicker atop the Cape Fear Arch than in the Albemarle Embayment. This indicates that the Cape Fear Arch was downwarped during the time that the sediments that compose this aquifer were deposited. Likewise, thinning of the sediments of the SevernMagothy aquifer into the Salisbury Embayment indicates that the embayment was not downwarped while these sediments were accumulating. Potomac aquifer sediments thin across all the arches and thicken into all the embayments shown in figure 20, which indicates that the crystalline-rock surface had the same configuration when those sediments were deposited as it has now.

The sediments that compose the Northern Atlantic Coast-al Plain aquifer system were deposited in nonmarine, marginal marine, and marine environments. Lower Cretaceous sediments were deposited mostly by streams in alluvial and deltaic environments. From Late Cretaceous through early Ter-tiary time, a series of marine transgressions covered most of the Atlantic Coastal Plain, and shallow marine to marine environments prevailed. A general regression of the sea began during late Tertiary time, when nonmarine Miocene sediments were deposited in New Jersey and parts of Maryland. Post-Miocene sediments are mostly Quaternary nonmarine clastic rocks.

Interbedding of fine- and coarse-grained Coastal Plain sediments is complex because of shifting deltaic and alluvial deposition sites and because of repeated transgressions and regressions of the sea. Sediment types and textures, accordingly, can change greatly within short horizontal or vertical distances. Bodies of sand, gravel, or limestone can change facies laterally and become clayey or silty and, thus, less permeable. Therefore, many local aquifers can be identified, but these local aquifers can be grouped on the basis of similar hydrologic characteristics and treated as regional aquifers. Six regional aquifers separated by four regional confining units make up the Northern Atlantic Coastal Plain aquifer system (fig. 21).

Except for the surficial aquifer, which is named for its location at the land surface, the name applied to each regional aquifer is taken from one or more of the geologic formations or groups that compose the aquifer. The names chosen are taken from the geologic units that are the most widespread and (or) compose the more productive aquifers. Use of an aquifer name in a given State does not necessarily mean that the geologic formation from which the name is derived is recognized in that State. For example, the Potomac aquifer (fig. 21) is named for permeable sediments that are part of the Potomac Formation (or Group), which is a geologic name used in Virginia, Maryland, Delaware, and New Jersey. The Potomac aquifer also is mapped in North Carolina even though equivalent sediments there are called by different names. Combined aquifer names couple the name of the youngest, most extensive water-yielding formation with that of the oldest, most extensive water-yielding formation. An example is the Castle HayneAquia aquifer in sediments of Oligocene through Paleocene age (fig. 21). The Castle Hayne Formation of North Carolina and the Aquia Formation of Virginia and Maryland form the most productive, most extensive parts of this regional aquifer.

VERTICAL SEQUENCE OF AQUIFERS

The Coastal Plain aquifers in Segment 11 are, in descending order, the surficial aquifer (fig. 22), the Chesapeake aquifer (fig. 23), the Castle HayneAquia aquifer (fig. 24), the SevernMagothy aquifer in the northern part of the segment (fig. 25), the Peedeeupper Cape Fear aquifer in the southern part (fig. 25), and the Potomac aquifer (fig. 26). The boundaries of the aquifers are irregular, as shown in these figures, and none of the aquifers extends over the whole Coastal Plain. The regional aquifers consist of various geologic formations and, in most places, are vertically separated by clayey or silty confining units that retard the vertical flow of ground water. The aquifers contain saline water in places, especially near the modern coastline, but they are mapped wherever the sediments that compose them are permeable, regardless of the chemical quality of the water in the sediments. The Castle HayneAquia aquifer is absent in part of the Delmarva Peninsula (fig. 24) because the sand beds of the aquifer contain more clay and are less permeable toward the coast.

The surficial aquifer is the uppermost aquifer in the aquifer system (fig. 22). This aquifer consists of unconsolidated, locally gravelly sand, mostly of Quaternary age. Although a thin blanket of unconsolidated sediments makes up the uppermost Coastal Plain beds over wide areas, these sediments mostly are unsaturated or else yield little water to wells. The aquifer is mapped in figure 22 only in those areas where wells completed in the aquifer can be expected to yield at least 50 gallons per minute.

The Chesapeake aquifer (fig. 23) underlies the surficial aquifer in most places, but the two aquifers are separated by a clayey confining unit. The Chesapeake aquifer consists mostly of sand beds of Miocene age. Phosphate of mineable concentration is in sands of the aquifer in North Carolina.

The Castle HayneAquia aquifer (fig. 24) underlies the Chesapeake aquifer; a clayey confining unit separates the two aquifers everywhere. In North Carolina, the Castle HayneAquia aquifer is mostly limestone of the Castle Hayne Formation that produces large volumes of water. Further northward, the aquifer is mostly glauconitic sand.

The SevernMagothy aquifer underlies the Castle HayneAquia aquifer from New Jersey southward to the Delmarva Peninsula (fig. 25). The Peedeeupper Cape Fear aquifer, which is the southern equivalent of the SevernMagothy aquifer, is present from southeastern Virginia to the North CarolinaSouth Carolina border. Both aquifers consist of fine to medium sand, and are overlain by a silt and clay confining unit. The Peedeeupper Cape Fear and the SevernMagothy aquifers are absent in most of Virginia.

The Potomac aquifer (fig. 26) is the lowermost and most widespread aquifer of the aquifer system. The Potomac aquifer consists of fine to coarse sand beds and is separated from overlying aquifers everywhere by a confining unit of clay and sandy clay.

SURFICIAL AQUIFER

The surficial aquifer extends over large parts of the Del-marva Peninsula and the eastern coastal plain of North Carolina. Although thin surficial deposits yield small volumes of water to rural and domestic wells in a large part of the Coastal Plain, the surficial aquifer is defined as a principal Coastal Plain aquifer in this report only where it is capable of yielding at least 50 gallons of water per minute to wells or where the use of underlying aquifers is restricted because the deeper aquifers contain saline water. The surficial aquifer consists of unconsolidated sand and gravel of marine and nonmarine origin, depending on the locality. Many small-scale aquifers constitute the surficial aquifer.

The surficial aquifer consists of sand of Pleistocene age and beach and dune deposits of Holocene age on the Cape May Peninsula at the southern

tip of New Jersey where the aquifer is underlain by a clay confining unit that separates it from the deeper Chesapeake aquifer. The surficial aquifer attains its greatest thicknesses in buried channels in the Delmarva Peninsula. Elsewhere in Segment 11, the average thickness of the aquifer is generally 50 feet or less. Near the DelawareMaryland State boundary, the surficial aquifer directly overlies water-yielding beds of the Chesapeake aquifer. In that area, the combined beds act as a single aquifer.

The surficial aquifer contains water predominately under unconfined conditions, but clay beds locally create confined conditions. Almost all the flow within the aquifer is local; that is, water moves from recharge areas along short flow paths to discharge to the nearest stream or other surface-water body. Some water, however, percolates downward to recharge the underlying aquifers.

The transmissivity of the surficial aquifer (the rate at which water will move through the aquifer) is variable. Transmissivity values for the aquifer are generally less than 1,000 feet squared per day except on the Delmarva Peninsula where they are commonly 8,000 feet squared per day. Locally, the transmissivity of the aquifer is as much as 20,000 feet squared per day in buried channels in Delaware and 53,000 feet squared per day in a paleochannel in Maryland. The aquifer is very thick in the places where the transmissivity values are largest.

The quality of water in the surficial aquifer is variable and partly reflects the chemistry of the precipitation that recharges the aquifer. In precipitation, dissolved sodium and chloride concentrations tend to be greater, and dissolved sulfate concentrations tend to be less, nearer the coastline than inland. The chemical composition of the precipitation is modified as the water percolates downward through the soil zone and then moves through the aquifer where it reacts chemically with aquifer minerals. Because the water follows short flow paths, its residence time is short in the surficial aquifer, and the dissolution of minerals is limited.

Where the surficial aquifer adjoins the coast or saltwater estuaries and where it occurs on offshore islands, it is usually hydraulically connected to saline water. Hydraulic heads (water levels) in the aquifer are only slightly above sea level in these low-lying land areas, and the depth to saline water may be shallow as a result. The same low-lying areas tend to be natural discharge areas for the aquifers that underlie the surficial aquifer. The water that is discharged upward from the deeper aquifers tends to be hard and highly mineralized. In these areas, only water in the upper part of the surficial aquifer might be suitable for use.

Water in the surficial aquifer is especially susceptible to contamination by human activities because the aquifer is exposed at the land surface. For example, nitrogen and lime that are added to the soil during crop production can enter the water. Livestock wastes and septic-tank fields also produce nitrogen, the end product of which is nitrate in the ground water. Local contamination also can result from seepage from landfills, leakage from underground storage tanks, chemical spills, and infiltration of urban contaminants.

Ground-water withdrawals from the surficial aquifer in Segment 11 are greatest on the Delmarva Peninsula where sands of Holocene to Pliocene age and some gravel beds of Miocene age constitute the aquifer. The distribution of major pumping centers during 1979 and 1980, excluding irrigation, is shown in figure 27. The aquifer is used locally in Virginia for domestic and agricultural supplies, and withdrawals from the aquifer in North Carolina are principally for the same uses. South of Chesapeake Bay, the surficial aquifer is typically thinner or contains more clay than

in the Delmarva Peninsula. In North Carolina, the surficial aquifer is near the coast and in several counties near the South Carolina border. Throughout much of the coastal area, the surficial aquifer is recognized as a principal aquifer not because of its potential to yield large volumes of water, but because the underlying aquifers commonly contain saline water and their use is thus restricted.

Total fresh ground-water withdrawals from the surficial aquifer were about 120 million gallons per day during 1985. The largest withdrawals of water were concentrated near Salisbury, Md., and Dover, Del. (fig. 27). Water from the aquifer was used principally for agricultural supplies and domestic and commercial purposes, but substantial quantities also were used for public supply and for industrial, mining, and thermoelectric power supplies (fig. 28).

CHESAPEAKE AQUIFER

The Chesapeake aquifer is the uppermost regional aquifer of the Northern Atlantic Coastal Plain aquifer system. The aquifer consists of permeable beds in the Chesapeake Group of Oligocene to Pliocene age and their approximate stratigraphic equivalents. The top of the Chesapeake aquifer is mostly above sea level in New Jersey but is nearly 300 feet below sea level on the Outer Banks of North Carolina (fig. 29).

The Chesapeake aquifer in New Jersey includes the Cohansey Sand and most of the Kirkwood Formation, along with local terrace gravels. The local name of the Chesapeake aquifer is the KirkwoodCohansey aquifer system (fig. 21). In its thicker parts, confining units divide the Chesapeake aquifer into three local aquifers. The upper part of the aquifer is predominately fine to coarse sand that contains water mostly under unconfined conditions. The lower part is typically fine to medium sand that contains two thick clay beds near the coast. The maximum thickness of the Chesapeake aquifer in New Jersey is about 960 feet, but this includes about 450 feet of clay that forms local confining units in the lower part of the aquifer.

On the Delmarva Peninsula, the regional Chesapeake aquifer comprises six local sand aquifers, which consist of layers of medium to coarse, silty sand, and locally contain grav-el or shell fragments. The sands are separated by confining units of silty sand and clay. On the northwestern Delmarva Peninsula, the local aquifers are successively truncated and overlain from southwest to northeast by the surficial aquifer. Where the surficial and Chesapeake aquifers are in direct contact, they form a composite aquifer that contains water under unconfined, or water-table, conditions. The Chesapeake aquifer generally dips gently and thickens oceanward. Its total thickness exceeds 600 feet along the coast, but much of the thickening is due to clayey and silty sediments. The deeper and more southeasterly parts of the aquifer contain slightly saline to saline water. Only the upper part of the aquifer is important as a source of water in the Virginia part of the peninsula.

The Chesapeake aquifer in Maryland is not mapped west of Chesapeake Bay; sediments equivalent to the lower part of the aquifer extend west of the bay but consist mostly of clay and silt. The upper part of the Chesapeake aquifer west of the bay in Virginia is the local YorktownEastover aquifer (fig. 21).

The Chesapeake aquifer in North Carolina is restricted to the northeastern part of the Coastal Plain. It consists of two local aquifers (fig. 21)‹the upper (Yorktown) aquifer extends farther west than the lower (Pungo River) aquifer. The Yorktown aquifer consists of fine shelly sand, silty sand, and shell beds, whereas the Pungo River aquifer consists of fine to medium phosphatic sand. Where both local aquifers are present, the maximum

thickness of the Chesapeake aquifer is about 1,000 feet; the average thickness is about 330 feet.

Much of the water in the upper part of the Chesapeake aquifer is under unconfined conditions. The aquifer is closely connected to streams, and before pumping began, most of the water that entered the aquifer as recharge from precipitation moved only a few miles or less along flow paths to discharge to the streams (fig. 30). Some of the water, however, moved along longer flow paths to discharge to estuaries or the ocean. Where the water table was close to the land surface, some ground water discharged to the atmosphere through evaporation and transpiration. Where hydraulic heads (water levels) in the Chesapeake aquifer were higher than those in the underlying Castle HayneAquia aquifer, a small part of the water in the Chesapeake aquifer moved downward across a confining unit and into the lower aquifer. In some areas, mostly near the coast, the hydraulic head in the Castle HayneAquia aquifer was greater than that in the Chesapeake aquifer, and water moved upward from the deeper aquifer into the Chesapeake aquifer.

The Chesapeake aquifer is considered to be a principal aquifer only where the transmissivity of the aquifer is greater than 500 feet squared per day (fig. 29). In these areas, wells completed in the aquifer commonly yield 50 gallons per minute or more. Elsewhere, the aquifer may yield water, but not in quantities sufficient for most uses; therefore, it is considered to be a minor aquifer. The transmissivity of the aquifer generally increases toward the coast and reaches a maximum near the southern border of Delaware and in a small area of coastal New Jersey. The coastward increase in transmissivity reflects an increase in the thickness of the aquifer in these areas.

After withdrawals began, ground water continued to flow regionally in the same directions as before development, but some of the water that would have discharged to surface-water bodies or to the atmosphere under natural conditions was intercepted by wells. Flow paths shifted as water moved toward cones of depression that formed around pumping centers (fig. 31). By 1980, the potentiometric surface had been lowered over wide areas, which resulted in reduced evaporation and transpiration and increased recharge to the aquifer.

Withdrawals caused the potentiometric surfaces of the upper and lower parts of the aquifer to be different in parts of New Jersey, Delaware, and North Carolina. This is because thick confining beds within the aquifer impede vertical ground-water flow in these areas between the upper and lower parts of the aquifer. The lowering of the potentiometric surface induced saline water intrusion locally on the Cape May Peninsula and other coastal areas in New Jersey.

Water in the aquifers of the Northern Atlantic Coastal Plain aquifer system can be classified according to dominant dissolved cations and anions into the following hydrochemical facies typical of ground water in the Northern Atlantic Coastal Plain: variable composition, calcium plus magnesium bicarbonate, sodium bicarbonate, and sodium chloride. To demonstrate the facies classification used, a sodium bicarbonate water is one in which sodium ions account for more than 50 percent of the total cations in the water and bicarbonate ions account for more than 50 percent of the total anions. Waters classified as variable composition have no ions that exceed 50 percent.

The hydrochemical facies in water from the upper part of the Chesapeake aquifer in Virginia and North Carolina follow a general coastward, or downdip, sequence from a variable- composition facies in aquifer outcrop areas to a calcium plus magnesium bicarbonate facies, then to a sodium bicarbonate facies, and finally to a sodium chloride facies (fig. 32).

This sequence is generally characteristic of waters in the Coastal Plain aquifers. Also, the concentration of dissolved solids in the ground water increases in a seaward direction. The distribution of hydrochemical facies with respect to areas where the Chesapeake aquifer crops out and with respect to the coast, and the seaward increase in dissolved-solids concentration, are largely the result of natural (prepumping) ground-water flow patterns. The same sequence of hydrochemical facies occurs with increasingdepth in the aquifers and is accompanied by an increase in the dissolved-solids concentration in the water.

Over most of its extent in New Jersey, the Chesapeake aquifer is exposed at the land surface and contains water of the variable-composition facies (fig. 32). In a narrow band parallel to the coast, the mixing of that water with saline water resulted in a sodium chloride facies. Dissolved-solids concentrations are generally less than 250 milligrams per liter, except along the coast. Sulfate is present locally in water from the aquifer in central New Jersey, probably as a result of the oxidation of sulfide minerals, such as pyrite, in the aquifer.

The hydrochemical facies pattern on the Delmarva Peninsula (fig. 32) is, for the most part, the result of ground water movement from aquifer recharge areas in the central part of the peninsula toward the Atlantic Ocean and the Delaware Bay on the east and northeast and toward the Chesapeake Bay on the west. The water changes northwestward and southeastward from a variable-composition facies to a calcium plus magnesium bicarbonate facies. Some of the change in facies also is due to northwestward truncation of local aquifers that contain water of differing character.

In the western parts of the coastal plain of North Carolina and Virginia, the hydrochemical facies of water in the Chesapeake aquifer cannot be identified conclusively because data are too sparse. Accordingly, the water is designated as ³variable composition.² Dissolved-solids concentrations in water from this area are generally less than 250 milligrams per liter. Seaward of this area in North Carolina, dissolved-solids concentrations increase to more than 2,000 milligrams per liter near the Albemarle Sound and the coast. Fossil shell material in the aquifer is a source of dissolved calcium and magnesium in the broad area mapped as calcium plus magnesium bicarbonate facies. Further eastward, clayey material in the aquifer acts as a natural softening agent, exchanging sodium ions for calcium to produce the sodium bicarbonate facies. The mixing of fresh ground water with saline water in the low-lying coastal area causes an increase in the dissolved-solids concentration of the water and a change to sodium chloride facies.

Total freshwater withdrawals from the Chesapeake aquifer during 1985 were estimated to be 195 million gallons per day. The distribution of major pumping centers, excluding irrigation, during 1979 and 1980 is shown in figure 33. The largest withdrawals of water were in New Jersey, although pumping centers on the Delmarva Peninsula also withdrew large volumes of water. Withdrawal centers in eastern North Carolina and southeastern Virginia pumped only small to moderate volumes of water.

About one-half of the freshwater withdrawn from the Chesapeake aquifer during 1985 (about 95 million gallons per day) was used for public supply (fig. 34). About 45 million gallons per day was withdrawn for domestic and commercial use. Agricultural withdrawals accounted for about 39 million gallons per day during 1985, and only about 16 million gallons per day was withdrawn for industrial, mining, and thermoelectric power uses.

The Castle HayneAquia aquifer extends from New Jersey southward to southeastern North Carolina (fig. 35). The aquifer consists mostly of permeable strata of Eocene and Paleocene age but locally includes rocks of Oligocene age. The top of the aquifer is about at sea level in most places near its northwestern limit and slopes seaward to depths of more than 750 feet below sea level in New Jersey and more than 1,250 feet below sea level on the Outer Banks of North Carolina. The aquifer is absent in the southwestern one-third of the Delmarva Peninsula, where its permeable beds grade eastward into clay. A clayey confining unit overlies the aquifer almost everywhere and is thickest on the western shore of the Chesapeake Bay in Maryland where it consists of as much as 250 feet of diatomaceous clay.

In New Jersey, the regional Castle HayneAquia aquifer consists of the local Piney Point and Vincentown aquifers (fig. 21), which are thin sand aquifers within a thick confining unit of silt and clay. The name ³Piney Point aquifer² is applied in this chapter to permeable, fine to coarse, glauconitic sand (fig. 36) that was formerly correlated in New Jersey as the Eocene Piney Point Formation but is now (1996) considered to be a separate, younger, unnamed sand that is hydraulically connected to permeable sands of the Piney Point Formation in Maryland. The underlying Vincentown aquifer consists of sparsely glauconitic quartz sand and fossiliferous, calcareous, quartz sand. In Burlington, Ocean, and Monmouth Counties, N.J., moderately permeable sand of the Vincentown aquifer grades southeastward into silt and clay within a few miles of the outcrop area of the aquifer. In this area, the Vincentown aquifer is laterally separated from the Piney Point aquifer by less permeable sediments (fig. 35). The maximum thickness of the Castle HayneAquia aquifer in New Jersey is 220 feet, and the average thickness is about 90 feet.

The regional Castle HayneAquia aquifer in Delaware, Maryland, and Virginia is subdivided into two local aquifers (fig. 21). The upper aquifer, which is called the Piney PointNanjemoy aquifer in Delaware and Maryland and the ChickahominyPiney Point aquifer in Virginia, consists of medium to coarse glauconitic sand mainly in the Piney Point and the Nanjemoy Formations. The lower aquifer, which is called the AquiaRancocas aquifer in Delaware and Maryland and the Aquia aquifer in Virginia, consists of glauconitic sand of the Aquia Formation or the Rancocas Group. The upper aquifer consists predominately of Eocene sands, but contains some sands of Oligocene age; the lower aquifer consists of Paleocene sands. The aquifers are separated by a silt and clay confining unit that ranges in thickness from a few feet in southern Virginia to as much as 210 feet in northeastern Maryland. The maximum thickness of the Castle HayneAquia aquifer in Delaware, Maryland, and Virginia exceeds 460 feet, and the average thickness is about 140 feet.

In North Carolina, the regional Castle HayneAquia aquifer consists of two local aquifers‹the Castle Hayne aquifer (a major aquifer) and the underlying, less important Beaufort aquifer. The Castle Hayne aquifer is limestone, sandy marl, and fine to coarse limey sand. It includes most of the Eocene Castle Hayne Formation and the lithologically similar Oligocene River Bend Formation. This aquifer is restricted to the eastern one-half of the North Carolina Coastal Plain, and its average thickness is about 185 feet. The Beaufort aquifer, which is fine to medium glauconitic sand, contains thin beds of shell and limestone. It extends farther north and south than the Castle Hayne aquifer, but its thickness is generally less than 50 feet. The two aquifers are separated by a confining unit of silt, clay, and sandy clay that is generally less than 50 feet thick but is as much as 180 feet thick along the coast.

The Castle HayneAquia aquifer is considered to be a major aquifer except for areas where the transmissivity of the aquifer is less than 1,000 feet squared per day (fig. 35). In these areas of low transmissivity, which are mostly in Virginia, Maryland, and Delaware, the aquifer is thin. It thins westward because it pinches out as a result of erosion, but the eastward thinning is the result of a change in facies from sand to clay. The transmissivity of the aquifer is highest in southeastern North Carolina, where it is mostly a thick section of highly permeable limestone.

Before ground-water withdrawals began, water moved from recharge areas of higher altitude along the western limit of the aquifer toward rivers, estuaries, bays, and the Atlantic Ocean (fig. 37). In New Jersey, flow was generally toward the ocean, the Delaware River, and the Delaware Bay. Flow in the western shore of Maryland was from the northwestern limit of the aquifer toward both the Potomac River and Chesapeake Bay. A ground-water divide on the Delmarva Peninsula separated flow to Chesapeake Bay from flow to Delaware Bay. In Virginia, flow was generally along shorter flow paths from recharge areas toward the major rivers. The regional movement of water in North Carolina was eastward, along long flow paths from recharge areas that are less than 50 feet above sea level (except for local areas in Bertie, Lenoir, and Duplin Counties) toward sounds and the ocean.

In addition to lateral flow, water also entered and left the Castle Hayne-Aquia aquifer from overlying and underlying aquifers by vertical leakage through confining units. Because the Castle HayneAquia aquifer is buried throughout most of its extent, it does not receive recharge directly from precipitation and does not discharge by evapotranspiration. Nevertheless, where the aquifer is near the surface, most of the ground water moved through local flow systems in which water entered the aquifer by downward leakage through a confining unit and discharged a short distance away by upward leakage to another aquifer or to a stream.

Ground-water withdrawals lowered the hydraulic head in the aquifer and formed cones of depression in its potentiometric surface (fig. 38). The direction of ground-water flow was changed in and around the pumping centers, and was reversed from the prepumping flow direction in some places (compare figs. 37 and 38). Heads have declined in small areas in New Jersey and the western shores of Maryland and Virginia as a result of withdrawals at pumping centers. The most prominent areas of decline in hydraulic head are in the central Del-marva Peninsula, where water is withdrawn from the local Piney Point and AquiaRancocas aquifers for public supply and in the southern part of the North Carolina Coastal Plain, where large volumes of water have been withdrawn from the local, highly productive Castle Hayne aquifer for mining uses and public supply.

Water in the Castle HayneAquia aquifer changes in a seaward direction from a calcium plus magnesium bicarbonate hydrochemical facies along most of the western margin to a sodium bicarbonate facies in the middle parts and then to a sodium chloride facies near the coast (fig. 39). Dissolved-solids concentrations in the water increase seaward from the landward margins of the aquifer. These distributions are mostly the result of natural ground-water flow patterns. Whole or broken fossil shell material characterizes the aquifer from New Jersey southward through Virginia; in North Carolina, the aquifer is mostly limestone. Chemical reactions between ground water and the shell material or limestone minerals within the aquifer near its western limit are predominately dissolution and precipitation of calcareous material, which results in a calcium plus magnesium bicarbonate hydrochemical facies. This facies is especially widespread in North Carolina because of the abundant calcium and magnesium carbonate in the Castle Hayne aquifer.

The band of sodium bicarbonate facies in the aquifer is broader from New Jersey through Virginia than in North Caroina. In this band, ion-exchange reactions predominate. Glauconite is abundant in the aquifer north of North Carolina and is the principal agent in the exchange of sodium for calcium ions, a process that produces a sodium bicarbonate type water. The sodium chloride facies is in much of the low-lying coastal area, particularly in North Carolina, where the mixing of freshwater with saline water is the most important chemical process.

A small area of variable-composition facies is situated along the outcrop of the aquifer in Anne Arundel County, Md. Because the hydraulic gradient is steep, the ground water moves rapidly and is in contact with aquifer minerals for only a brief time. Accordingly, the water does not assume a distinctive chemical type.

The distribution of major pumping centers that withdrew water from the Castle HayneAquia aquifer during 1979 and 1980 for all purposes except irrigation is shown in figure 40. The largest withdrawals were in North Carolina. During 1980, 67 million gallons per day were pumped from the aquifer in Beaufort County, N.C., to lower the pressure in the aquifer under open-pit phosphate mines and to wash and process the phosphate ore. Large volumes of water also were withdrawn in North Carolina for public supplies for the cities of New Bern, Jacksonville, and Wilmington. Most of the water withdrawn from the aquifer in pumping centers in Virginia and northward was used for public supplies and domestic and commercial uses.

Total fresh ground-water withdrawals from the Castle HayneAquia aquifer were estimated to be 164 million gallons per day during 1985. The amount of water withdrawn was much greater in North Carolina than in the other Segment 11 States combined, and the use of the water also was much different (fig. 41).

About 76 percent of the total withdrawals, or about 125 million gallons per day, were in North Carolina (fig. 41A). Most of the water withdrawn in North Carolina was used for mining, industrial, and thermoelectric power purposes, with about 88 million gallons per day being pumped for this use; most of this water was used by the mining industry. Withdrawals in North Carolina for domestic and commercial, public supply, and agricultural uses were about 21, 13, and 4 million gallons per day, respectively.

About 24 percent of the total withdrawals, or about 39 million gallons per day, were in Virginia, Maryland, Delaware, and New Jersey (fig. 41B). About 46 percent of the water withdrawn, or about 18 million gallons per day, was pumped for domestic and commercial uses. Withdrawals for public supply were about 14 million gallons per day. About 5 million gallons per day was withdrawn for mining, industrial, and thermoelectric power use, and about 2 million gallons per day was withdrawn for agricultural purposes.

SEVERNMAGOTHY AQUIFER

The SevernMagothy aquifer underlies most of the New Jersey Coastal Plain and the Delmarva Peninsula and is on the Maryland part of the western shore of Chesapeake Bay (fig. 42). The aquifer consists of permeable sand beds of Late Cretaceous age. The top of the aquifer is slightly above sea level along its northwestern limit and slopes southeastward to depths of more than 2,000 feet below sea level. Except where it crops out near its western limit, the aquifer is overlain by a confining unit of silt and clay.

The SevernMagothy aquifer in New Jersey consists of three local aquifers (fig. 21), which are named for the geologic units that compose the aquifers. From top to bottom, these are the WenonahMount Laurel aquifer, the Englishtown aquifer, and the upper (Magothy) part of the Potomac-

RaritanMagothy aquifer. The WenonahMount Laurel aquifer is predominately fine to medium glauconitic sand; the Englishtown aquifer is fine to medium sand and has some beds of clay and silt; and the Magothy aquifer typically consists of well-stratified to crossbedded, fine to medium sand. Each of the local aquifers is separated from the underlying aquifer by a confining unit of clay and silt. The confining unit between the WenonahMount Laurel and the Englishtown aquifers is generally from 25 to 70 feet thick; the one that underlies the Englishtown aquifer is generally from 100 to 400 feet thick and effectively isolates the deep Magothy aquifer from the overlying aquifers. The maximum thickness of the SevernMagothy aquifer in New Jersey exceeds 720 feet, and the average thickness is about 340 feet.
In Delaware, Maryland, and the Eastern Shore of Virginia, the Severn-Magothy aquifer consists of sand beds in the Severn Formation, the Mount Laurel Sand, the Matawan Formation (or Group), and the Magothy Formation. The sands are generally similar in lithology to their equivalents in New Jersey, except that the sands of the Severn, the Mount Laurel, and the Matawan are thinner, finer grained, and contain more clay than those in New Jersey; the Magothy Formation, therefore, contains the principal water-yielding sands. Confining units of finer grained, and contain more clay than those in New Jersey; the Magothy Formation, therefore, contains the principal water-yielding sands. Confining units of clay and silt separate the local Severn and Matawan aquifers and the local Matawan and Magothy aquifers. Each of the confining units is generally from 50 to 75 feet thick in Delaware but is thinner in Maryland and Virginia. The maximum thickness of the SevernMagothy aquifer in Delaware, Maryland, and Virginia is about 385 feet; the average thickness is about 185 feet.
In a few local areas, the transmissivity of the SevernMagothy aquifer is less than 1,000 feet squared per day (fig. 42). The aquifer is thin in these areas and generally yields less than 50 gallons per minute to wells. Throughout most of its area, the aquifer has a transmissivity of less than 5,000 feet squared per day, but transmissivity values exceed 10,000 feet squared per day in two local areas in New Jersey.
Before development of the aquifer began, water levels in the upper part of the regional SevernMagothy aquifer were more than 100 feet above sea level in places along a ground-water divide in the central part of the New Jersey Coastal Plain and in aquifer outcrop areas in Anne Arundel and Prince Georges Counties, Md. (fig. 43). Water levels were less than 50 feet above sea level on the Delmarva Peninsula. Regional ground-water movement was toward the Atlantic Ocean and Chesapeake, Delaware, and Raritan Bays. Before pumping began, the configuration of the potentiometric surface of the local Magothy aquifer (the lower part of the regional SevernMagothy aquifer) was generally similar to that shown in figure 43. However, because recharge to the local Magothy aquifer in New Jersey was impeded by the substantial thickness of the overlying clay and silt confining unit, water levels in the local Magothy aquifer were as much as 50 feet lower than those in the upper part of the regional Severn-Magothy aquifer. For the upper and lower parts of the SevernMagothy aquifer, regional flow was along intermediate to long flow paths, and the water moved from outcrop recharge areas toward discharge areas at lowlands, major bays, and the Atlantic Ocean. In addition to the lateral flow, water also moved vertically into and out of the SevernMagothy aquifer from overlying and underlying aquifers by leakage across confining units. Except in aquifer outcrop areas along its northwest ern boundary, the SevernMagothy aquifer is covered by a confining unit and thus does not receive direct recharge by precipitation, nor does it discharge water by evapotranspiration.

Ground-water withdrawals caused a general decline in the potentiometric surface throughout the aquifer, created cones of depression in the potentiometric surface (fig. 44), and changed the directions of ground-water movement near pumping centers. In the upper part of the regional SevernMagothy aquifer, withdrawals lowered the potentiometric surface to more than 150 feet below sea level in northeastern New Jersey. Hydraulic heads were lowered below sea level over much of the extent of the aquifer in eastern New Jersey, most of the Delmarva Peninsula, and part of the western shore of Maryland as a result of pumping. The lowered heads resulted in intrusion of saline water into the aquifer along Raritan Bay. The lowered hydraulic head in the SevernMagothy aquifer in central Delaware is attributed in part to withdrawals from the overlying Castle HayneAquia aquifer (local Piney Point aquifer), which caused water to move upward into the shallower aquifer through a leaky confining unit.

By 1980, water-level declines in response to withdrawals in southwestern New Jersey were larger in the lower part (local Magothy aquifer) of the regional SevernMagothy aquifer than in the upper part. Much more water was pumped from the lower part of the regional aquifer than from the upper part, and the thick confining unit that overlies the lower part of the aquifer retarded recharge from above. The potentiometric surface was more than 75 feet below sea level in 1980 (fig. 44) in an area of central Camden County, New Jersey, where the predevelopment potentiometric surface of the upper part of the aquifer was more than 100 feet above sea level (fig. 43). Withdrawals loweredthe potentiometric surface below sea level throughout most of the lower part of the regional aquifer in New Jersey and resulted in saline water encroachment into the aquifer in Salem County, N.J., and along Raritan Bay.

Hydrochemical facies in the upper part of the SevernMagothy aquifer show the same coastward sequence that is typical of water in aquifers of the northern Atlantic Coastal Plain‹variable composition at the western margin, grading eastward to calcium plus magnesium bicarbon ate, grading, in turn, to sodium bicarbonate, and, finally, to sodium chloride in downdip parts of the aquifer (fig. 45). The facies generally appear vertically in the same sequence downward in the aquifer. Predevelopment ground-water flow patterns largely determine the distribution of hydrochemical facies and the seaward increase in dissolved-solids concentrations in the water. Local intrusion of saline water as a result of withdrawals is not shown at this map scale.

The upper part of the regional SevernMagothy aquifer contains glauconite in most places. Glauconite is active in base-exchange reactions‹the mineral exchanges sodium ions for calcium ions, which naturally softens the water. This proc-ess is reflected by the broad band of sodium bicarbonate facies across the Delmarva Peninsula and New Jersey (fig. 45). Because the lower part of the SevernMagothy aquifer on the western shore of Maryland does not contain glauconite, the base exchange process is less active, and the band of sodium bicarbonate facies is narrower. The dissolved-solids concentration in water from the upper part of the Severn-Magothy aquifer increases downdip to more than 2,000 milligrams per liter in southern New Jersey and the eastern Delmarva Peninsula (fig. 45). Mixing of freshwater with saline water in low-lying coastal areas is responsible for the large increase in dissolved solids and the change to a sodium chloride facies.

Major pumping centers that withdrew water from the SevernMagothy aquifer during 1979 and 1980 were located mostly near its western limit (fig. 46). The greatest rate of withdrawal, by far, was in New Jersey; however, numerous pumping centers also withdrew water in Maryland. Total fresh ground-water withdrawals from the aquifer were estimated to be 173 million

gallons per day during 1985 (fig. 47). Withdrawals in New Jersey were 151 million gallons per day during this period. Of the water withdrawn, 80 percent, or about 138 million gallons per day, was used for public supply. About 17 million gallons per day was withdrawn for industrial, mining, and thermoelectric power purposes. Withdrawals for domestic and commercial uses were about 14 million gallons per day, and only about 4 million gallons per day was withdrawn for agricultural use.

PEEDEEUPPER CAPE FEAR AQUIFER

The regional Peedeeupper Cape Fear aquifer underlies most of the North Carolina Coastal Plain and extends into a small part of southeastern Virginia (fig. 48). The aquifer consists of permeable sands of the Peedee Formation, the Black Creek Formation, and the upper part of the Cape Fear Formation, all of Late Cretaceous age, and their stratigraphic equivalents in Virginia. The Peedeeupper Cape Fear aquifer is the lateral equivalent of the SevernMagothy aquifer, but the two aquifers are not known to be connected. A clayey confining unit overlies the Peedeeupper Cape Fear aquifer in most places. The top of the aquifer is above sea level over much of the western part of the North Carolina Coastal Plain and slopes eastward to a depth of more than 3,000 feet below sea level at Cape Hatteras. The entire aquifer contains saline water in a large area in eastern North Carolina, approximately where the top of the aquifer is 1,000 feet below sea level or deeper. No fresh ground water circulates in the aquifer east of the line that represents water with 10,000 milligrams per liter chloride concentration (fig. 48).

The regional Peedeeupper Cape Fear aquifer in North Carolina consists of the local Peedee, Black Creek, and upper Cape Fear aquifers (fig. 21), which are separated by confining units of clay and silt that generally range from 20 to 70 feet in thickness. The Peedee aquifer consists of fine tomedium glauconitic sand of the Peedee Formation, and contains shell material and calcareous sandstone beds. The Black Creek aquifer consists of very fine to fine lignitic, glauconitic, and shelly sand interbedded with clay of the Black Creek Formation, and fine to medium sand, with lenses of coarse sand and clay of the underlying Middendorf Formation. The Black Creek aquifer is the thickest and most productive of the three local aquifers. The upper Cape Fear aquifer consists mostlyof alternating beds of fine to medium sand and clay of the upper part of the Cape Fear Formation. The maximum thickness of the regional Peedeeupper Cape Fear aquifer is about 1,200 feet; the average is about 570 feet. The greater thicknesses are along the coast, but the aquifer contains saline water there.

In Virginia, sand beds equivalent to the upper part of the Cape Fear Formation have been assigned to the local upper Potomac aquifer (fig. 21). Beds equivalent to the local Peedee and Black Creek aquifers are mostly absent in Virginia. The average thickness of the regional Peedeeupper Cape Fear aquifer in Virginia is about 95 feet.

Where the transmissivity of the Peedeeupper Cape Fear aquifer is less than 1,000 feet squared per day (fig. 48), the aquifer is considered to be a minor aquifer. Wells completed in the aquifer in this low-transmissivity area yield less than 50 gallons per minute. By contrast, in some areas, the transmissivity of the aquifer is greater than 10,000 feet squared per day; in such areas, yields of 1,000 gallons per minute or more are obtained from properly constructed wells.

The potentiometric surface of the Peedeeupper Cape Fear aquifer was more than 400 feet above sea level in the southwestern corner of the North Carolina Coastal Plain before ground-water withdrawals began (fig. 49). The high areas on the potentiometric surface coincide with the high

altitude of the land surface. By contrast, the potentiometric surface in Virginia was less than 50 feet above sea level throughout the aquifer. Ground water moved regionally from areas of high hydraulic head, generally along the western limit of the aquifer, toward areas of low head along the coast and beneath sounds and estuaries. The direction of regional movement was eastward and southeastward along long flow paths. Locally, some water moved from recharge areas along short to intermediate flow paths and discharged to streams. In addition to the lateral flow indicated by the arrows in figure 49, water also leaked through confining units vertically into and out of the Peedeeupper Cape Fear aquifer from overlying or underlying aquifers that had hydraulic heads greater than those in the aquifer. Where the heads in the Peedeeupper Cape Fear aquifer were higher than those in adjacent aquifers, the leakage was reversed. Direct recharge by precipitation or discharge by evapotranspiration took place where the aquifer is exposed at the land surface.

The potentiometric surface of the aquifer has been lowered in and around pumping centers where large volumes of water are withdrawn. The direction of ground-water movement has been changed or, in places, reversed so that flow is toward the pumping centers. Cones of depression (fig. 50) have formed in the potentiometric surface of the upper part of the aquifer around the areas where withdrawals are greatest. One large area of decline in southeastern Virginia is the result of pumping for public supply. Another area of decline in Beaufort County, N.C., is the result of large withdrawals from the Castle HayneAquia aquifer. The withdrawals from this shallower aquifer, which are primarily for mining purposes, have induced upward leakage of water from the Peedeeupper Cape Fear aquifer through the confining unit that overlies it. The hydraulic head in the middle part of the Peedeeupper Cape Fear aquifer (the local Black Creek aquifer) has declined in the area of Kinston and Greenville, N.C. (fig. 50), but the decline is not evident in the potentiometric surface of the upper part of the aquifer. The decline is the result of withdrawals for public supply. Water levels in the local Black Creek aquifer have been drawn down more than those in the overlying local Peedee aquifer because most of the pumping wells are completed in the Black Creek aquifer and the confining unit that overlies the Black Creek aquifer is thicker and retards flow more effectively than the one above the Peedee aquifer.

The water in the upper part of the Peedeeupper Cape Fear aquifer is of variable composition over a large area in the western part of the North Carolina Coastal Plain (fig. 51). The processes of dissolution of shell material and precipitation of carbonate minerals predominate in the area where the water is a calcium plus magnesium bicarbonate type. In the southwestern part of the aquifer, the sodium bicarbonate facies is adjacent to the variable-composition facies; because the aquifer contains glauconitic sand and little or no shell material, the calcium plus magnesium bicarbonate facies is absent. A band of sodium bicarbonate facies is west of the widespread area of sodium chloride facies that is the result of mixing of saltwater and freshwater. The coastward progression of hydro-chemical facies is typical of that in other aquifers of the Northern Atlantic Coastal Plain and is mostly the result of predevelopment ground-water flow patterns.

In the areas of variable-composition and calcium plus magnesium bicarbonate facies, dissolved-solids concentrations in water from the upper part of the aquifer are generally less than 250 milligrams per liter. Dissolved-solids concentrations increase coastward to more than 2,000 milligrams per liter, mostly in the area of sodium chloride facies. In the easternmost part of the North Carolina Coastal Plain, water in the aquifer contains more than 10,000 milligrams per liter chloride (fig. 48)

and probably as much as 20,000 milligrams per liter dissolved solids in some places.

Numerous pumping centers withdrew water from the Peedeeupper Cape Fear aquifer during 1979 and 1980 (fig. 52). Use of the aquifer was widespread during this period, especially toward its western margin. The largest withdrawals, however, were in the central parts of the aquifer, where several cities withdrew water for public supplies.

Total fresh ground-water withdrawals from the Peedeeupper Cape Fear aquifer were estimated to be 126 million gallons per day during 1985 (fig. 53). Most of the water (about 58 million gallons per day) was withdrawn for public supply. Domestic and commercial withdrawals were about 40 million gallons per day, and about 28 million gallons per day were withdrawn for industrial, mining, and thermoelectric power uses.

POTOMAC AQUIFER

The regional Potomac aquifer underlies the entire Northern Atlantic Coastal Plain except for small areas near the Fall Line in Virginia, Maryland, and Delaware, and a multicounty area in the western part of the North Carolina Coastal Plain (fig. 54). The aquifer is the lowermost, and most widespread, aquifer of the Northern Atlantic Coastal Plain aquifer system. The Potomac aquifer consists mostly of permeable sands in the Potomac Formation (or Group) and their stratigraphic equivalents but includes younger, hydraulically connected, permeable sediments. The top of the aquifer is above sea level only in a narrow band near its western limit from New Jersey southward to Northampton County, N.C. The aquifer is more than 2,500 feet below sea level in southern New Jersey and on the easternmost part of the Delmarva Peninsula and more than 4,500 feet below sea level in easternmost North Carolina. A confining unit of clay and sandy clay overlies the aquifer in most places and is particularly effective in retarding vertical flow near Cape May, N.J., where its thickness is greater than 700 feet.

The regional Potomac aquifer in New Jersey includes the middle and lower aquifers of the PotomacRaritanMagothy aquifer system (fig. 21). The middle aquifer consists mostly of permeable beds of the Raritan Formation and the undifferentiated Potomac Formation and is mostly lenticular sand bodies interbedded with clay and silt, predominately of fluvial origin. The lower aquifer of the PotomacRaritanMagothy aquifer system is similar in lithology to the middle aquifer but contains more sand. The two local aquifers are separated by an indistinctly defined confining unit of clay and sandy clay that is generally from 50 to 150 feet thick where the regional Potomac aquifer contains freshwater but is more than 1,000 feet thick at the southeastern tip of New Jersey, where the aquifer contains saline water. The maximum thickness of the regional Potomac aquifer in New Jersey is about 3,400 feet, and the average thickness is about 630 feet. These thicknesses, as well as the those described below for the other States, include clay between the deepest permeable sand and bedrock and sands that contain saline water and effectively are not part of the aquifer.

The regional Potomac aquifer in Delaware and Maryland consists of the local Patapsco aquifer and the underlying local Patuxent aquifer, both named for sand and gravel formations of the Potomac Group that crop out in the northern part of the Maryland Coastal Plain. The Patapsco aquifer typically is lenses of fine to medium sand that range in length and width from a few feet to several miles, contain some gravel, and are separated by clay beds. The Patuxent aquifer typically is medium to coarse gravelly sand, and also is lenticular. A clayey confining unit that separates the two local aquifers generally is from 50 to 300 feet thick in northern

Delaware and the western shore of Maryland, where the regional Potomac aquifer contains freshwater, but is more than 900 feet thick at the mouth of Delaware Bay where the water in the aquifer is saline. The regional Potomac aquifer thickens and contains more clay to the southeast. The sediments that make up the Poto-mac aquifer are predominately of fluvial and deltaic origin. The maximum thickness of the aquifer in Delaware and Maryland is about 5,000 feet, and the average thickness is about 1,600 feet.

The regional Potomac aquifer in Virginia consists of the local middle and lower Potomac aquifers, which are approximately equivalent to the Patapsco and the Patuxent aquifers, respectively, of Maryland and Delaware, and consist of fine to coarse gravelly sand. The local middle and lower Potomac aquifers are separated by a clayey confining unit that generally is from 15 to 100 feet thick in the western part of the Coastal Plain where the regional Potomac aquifer contains freshwater and as much as 175 feet thick on the Delmarva Peninsula where the aquifer contains saline water. The maximum thickness of the regional Potomac aquifer in Virginia is about 4,600 feet, and the average thickness is about 800 feet.

The regional Potomac aquifer in North Carolina consists of two local aquifers‹the lower Cape Fear aquifer and the Lower Cretaceous aquifer (fig. 21). The lower Cape Fear aquifer consists of fine to medium sand (interbedded with clay) of the lower part of the Cape Fear Formation and other hydraulically connected permeable sediments. The Lower Cretaceous aquifer is predominately fine to medium sand with a few beds of coarse sand and limestone, all of which are in Lower Cretaceous strata. These Lower Cretaceous beds are not exposed at the surface, are known only through data from a few wells, and have no formal stratigraphic names. The Lower Cretaceous aquifer has been defined only in the northern part of the North Carolina Coastal Plain; farther south along the coast, equivalent beds contain saline water. The maximum thickness of the regional Potomac aquifer in North Carolina is about 4,900 feet, and the average thickness is about 500 feet.

The Potomac aquifer is considered to be a major aquifer except for local areas in North Carolina where the transmissivity of the aquifer is less than 1,000 feet squared per day (fig. 54); in these low-transmissivity areas, the aquifer is thin. The aquifer thins westward because it has been partly eroded away, but the eastward thinning is due to a facies change from sand to clay. The coastward increase in clay and decrease in sand also is shown by the distribution of transmissivity in Virginia and northward. Transmissivity values increase eastward from the western limits of the aquifer to its central parts, mostly because the thickness of the aquifer steadily increases seaward. East of the high-transmissivity areas, the transmissivity of the aquifer decreases due to the eastward change in facies from sand to clay, even though the total thickness of the aquifer continues to increase.

The potentiometric surface of the regional Potomac aquifer was highest along its western limit and in a small area along the South CarolinaNorth Carolina State line before withdrawals began (fig. 55). The potentiometric surface was higher at or near the higher land altitudes and lowest where ground water discharged to major rivers, bays, and the Atlantic Ocean. Regional ground-water movement was eastward and southeastward except in North Carolina where regional movement was toward the central part of the Coastal Plain. Water that contains concentrations of 10,000 milligrams per liter or more chloride marks the limit of the fresh ground-water flow system. Flow in North Carolina was effectively diverted by this saltwater body so that the ground water discharged to major streams in the central Coastal Plain. Only lateral flow is shown by the arrows in figure 55, but

water also leaked vertically into and out of the Potomac aquifer from the overlying aquifers. The Potomac aquifer mostly is covered by confining units and thus receives little direct recharge by precipitation or discharges little water by evapotranspiration.

After withdrawals from the regional Potomac aquifer began, much of the flow was diverted toward major pumping centers, and large cones of depression formed in the potentiometric surface (fig. 56). A composite cone has developed over most of the New Jersey Coastal Plain and part of northern Delaware. By 1980, hydraulic heads in this area had declined to more than 25 feet below sea level throughout the area of the cone and to more than 100 feet below sea level in a small area in Delaware. Saline water has encroached into the aquifer along Raritan Bay, along the lower Delaware River in New Jersey, and around the harbor at Baltimore, Md., because of the lowered hydraulic heads. A prominent composite cone more than 100 feet below sea level around Franklin, Va., and more than 50 feet below sea level in much of southern Virginia also extends into North Carolina. The cone reflects large withdrawals for industrial use, primarily to supply paper mills at Franklin and West Point, Va.

Hydrochemical facies of water in the regional Potomac aquifer show the same general seaward progression from variable composition to sodium chloride facies as other Coastal Plain aquifers (fig. 57). The variable-composition facies, however, is only in small areas where the aquifer crops out in New Jersey and Maryland. Along much of the western boundary of the aquifer in Delaware, southwestern Maryland, and northern Virginia, the calcium plus magnesium bicarbonate facies prevails. This facies might be the result of recharge by downward leakage from overlying aquifers that contain carbonate minerals in the form of shell material. The predominance of sodium bicarbonate water in large areas of the aquifer results partly from ion-exchange reactions that take place in water that percolates downward through overlying aquifers and confining units to the regional Potomac aquifer and partly from ion-exchange reactions within the Potomac aquifer. Freshwater mixes with saline water in near-coastal areas of the aquifer and produces the sodium chloride facies.

Most of the major pumping centers that withdrew water from the Potomac aquifer during 1979 and 1980 were near its western margin (fig. 58). However, large withdrawals were made in Virginia in the central parts of the Coastal Plain. The pumping centers in Virginia mostly supplied water for industrial, mostly paper-manufacturing, uses; those farther northward mostly provided public supplies.

Total fresh ground-water withdrawals from the Potomac aquifer were estimated to be 251 million gallons per day during 1985 (fig. 59). Of this amount, about 54 percent, or about 135 million gallons per day, was withdrawn for public supply. Withdrawals for industrial, mining, and thermoelectric power uses were the second largest withdrawal category; about 90 million gallons per day was pumped for those uses. Domestic and commercial withdrawals were about 23 million gallons per day, and only about 3 million gallons per day was pumped for agricultural use.

Piedmont and Blue Ridge aquifers

INTRODUCTION

Most of the Piedmont and the Blue Ridge Physiographic Provinces (fig. 60) is underlain by dense, almost impermeable bedrock that yields water primarily from secondary porosity and permeability provided by fractures. The bedrock in both provinces is partly covered by glacial deposits, which include productive sand and gravel aquifers that are part of the surficial aquifer system in northeastern Pennsylvania and northern New Jersey. The

principal differences between the two provinces are relief, altitude, and geographic position. The Piedmont Province is characterized by lower altitudes and more subdued topography than the adjacent Blue Ridge, which is a province of mountain ridges to the northwest (fig. 61). In this report, the hydrology of the Reading Prong, a physiographic feature that is part of the New England Physiographic Province, but whose topography and rock types are similar to those of the Blue Ridge Province, is discussed with the latter.

The Piedmont Province is bounded on the southeast by the Fall Line (fig. 60), which is a zone of rapids or waterfalls that marks the position where streams flow from the consolidated rocks of the Piedmont onto semiconsolidated to unconsolidated rocks of the Coastal Plain. The western and northwestern boundaries of the Piedmont Province are, for most of their length, the base of a mountain ridge. This ridge is the highlands of the Reading Prong from northern New Jersey to northeastern Pennsylvania and the Blue Ridge Mountains from southern Pennsylvania to North Carolina. In the gap between the two mountain ridges, the Piedmont Province is adjacent to the Valley and Ridge Province, and the boundary between the provinces is the northwestern edge of the early Mesozoic Gettysburg and Newark Basins (fig. 60).

The Piedmont Province can be subdivided topographically into lowland and upland areas. The lowlands are underlain by carbonate rocks (limestone, dolomite, and marble) and by clastic sedimentary rocks in early Mesozoic rift basins; these rocks are easily eroded. Extensive areas of carbonate rocks are concentrated in Pennsylvania; smaller areas are in Maryland. Locally, the early Mesozoic basins contain bodies of igneous rocks, such as basalt flows and diabase dikes and sills collectively called traprock. These igneous rocks are resistant to erosion and form low knobs and ridges (fig. 62) in the lowlands. Most of the province is uplands which are typically low, rounded hills and shallow valleys underlain by a complex assortment of metamorphic and igneous rocks of Paleozoic and Precambrian age. Locally, in such places as Washington, D.C., and Philadelphia, Pa., these crystalline rocks are at low altitudes and have low relief. Major structural lineaments and stratigraphic units strike predominately northeastward, but these alignments are not necessarily reflected by drainage patterns.

The Piedmont surface rises gradually westward to the Blue Ridge Mountain front, the highlands of the Valley and Ridge, or the Reading Prong. The western boundary of the Piedmont is at an average altitude of from 300 to 400 feet in New Jersey and is from 350 to 700 feet above sea level in Pennsylvania. The boundary rises to 700 or 800 feet above sea level in northern Virginia and farther south rises to about 1,500 feet above sea level near the VirginiaNorth Carolina State line.

The Blue Ridge Province (including the Reading Prong) in New Jersey and northern Pennsylvania consists of a narrow belt of rounded, gentle knobs of diverse altitude slightly higher than the adjacent Piedmont Province. From southern Pennsylvania to North Carolina, the eastern boundary of the Blue Ridge Province is the Blue Ridge front, which is a single, abrupt slope and commonly is marked by faulting. The Blue Ridge front rises more than 1,700 feet above the Piedmont surface near the North CarolinaVirginia State line and reaches a maximum height of nearly 2,500 feet in central North Carolina. The Blue Ridge Province contains the tallest mountains, highest altitudes (greater than 6,000 feet), and the most rugged topography in eastern North America (fig. 63). The southern part of the province is characterized by steep, forest-covered slopes cut by numerous stream valleys. The valleys of the major rivers include broad, gently rolling areas, as well as narrow gorges. In Segment 11, the province

reaches a maximum width of 70 miles in North Carolina. Altitudes are much lower in the northern portion of the province.

Rocks of the Blue Ridge Province and the Reading Prong are, for the most part, many types of metamorphic and intrusive igneous rocks. In New Jersey, Pennsylvania, and North Carolina, however, sedimentary rocks (limestone, dolomite, conglomerate, sandstone, and shale) also are included in the province. In all these rocks, except limestone, dolomite, and marble, which contain solution openings, joints and fractures are the only openings that store and transmit water.

The main body of rock between the joints and fractures is al-most impermeable.

HYDROGEOLOGIC UNITS

The Piedmont and Blue Ridge Provinces are underlain by three principal types of bedrock aquifers. In order of decreasing area, these are crystalline-rock and undifferentiated sedimentary-rock aquifers, aquifers in early Mesozoic basins, and carbonate-rock aquifers (table 1). Unconsolidated aquifers that are part of the surficial aquifer system overlie the bedrock aquifers locally in Pennsylvania and northern New Jersey.

Crystalline-Rock and Undifferentiated Sedimentary-Rock Aquifers

The most widespread aquifers in the Piedmont and Blue Ridge Provinces in Segment 11 are the crystalline-rock and undifferentiated sedimentary-rock aquifers. These aquifers extend over about 49,000 square miles, or about 86 percent of the area, of these provinces (table 1). Similar aquifers ex-tend southward into Segments 6 and 10 and northward into Segment 12 of this Atlas and are briefly discussed in the chapters describing these segments.

Most of the rocks that compose the crystalline-rock and undifferentiated sedimentary-rock aquifers are crystalline metamorphic and igneous rocks of many types. The main types of crystalline rocks are coarse-grained gneisses and schists of various mineral composition; however, fine-grained rocks, such as phyllite and metamorphosed volcanic rocks, are common in places. Most of the metamorphic rocks were originally sediments; some, however, were igneous rocks or volcan-ic tuff, ash, and lava flows. The degree of heat and pressure to which the original rocks were subjected, the nature of the fluids that have been in contact with the rocks, and the degree of folding and shearing that they have undergone have produced their present texture and mineralogy. Most of the metamorphic rocks have undergone several periods of metamorphism. Locally, they contain highly mineralized zones, some of which are ore bearing. During and after metamorphism, igneous rocks intruded the metamorphic rocks and are present as dikes, sills, and large to small plutons.

The undifferentiated sedimentary-rock aquifers consist of tightly cemented, predominately clastic rocks, many of which grade into metamorphic rocks. Undifferentiated sedimentary rocks are a minor component of the Blue Ridge Physiographic Province and are mainly along the western border of the province in North Carolina. Some of the sedimentary formations are in fault blocks. Most of the undifferentiated sedimentary rocks are of late Precambrian or early Paleozoic age, but in New Jersey, some are as young as middle Paleozoic.

Unconsolidated material called regolith (fig. 64) overlies the crystalline-rock and undifferentiated sedimentary-rock aquifers almost everywhere. The regolith consists of saprolite, colluvium, alluvium, and soil. Saprolite is a blanket of decomposed or partially decomposed rock that is usually thick and clayey, and whose texture varies depending on

the type of parent bedrock from which the saprolite is derived. Colluvium is weathered rock material that has slumped downward from hillsides. Alluvium consists mostly of water-transported sediment in stream valleys and channels. Because the regolith material varies greatly in thickness, composition, and grain size, its hydraulic properties also vary greatly. However, the regolith is everywhere more permeable than the underlying bedrock. Water in the bedrock is stored in and moves through fractures, which form the only effective porosity in the unweathered rock.

Aquifers in Early Mesozoic Basins

Aquifers in early Mesozoic rift basins are all within the Piedmont Province and occupy about 9 percent of the combined area of the Blue Ridge and the Piedmont Provinces (table 1). An additional 2 percent of the area of the combined provinces is occupied by the early Mesozoic Durham, Sanford, Wadesboro, and Davie County Basins in North Carolina (fig. 60), but the rocks in these basins are not considered to be significant aquifers. Aquifers in early Mesozoic basins are primarily in three major basins‹the Newark Basin in New Jersey and Pennsylvania (fig. 60) is the largest basin and the one from which the most ground water is withdrawn; second largest is the Gettysburg Basin of Pennsylvania and Maryland; and third is the Culpeper Basin of Virginia. The Richmond Basin in Virginia and the Dan RiverDanville Basin in Virginia and North Carolina are of intermediate size. Nine smaller early Mesozoic basins are in Virginia.

The early Mesozoic basins formed by downfaulting that accompanied rifting of the Earth¹s crust in the Triassic and Jurassic Periods during incipient stages of continental breakup and are filled mostly with thick sequences of sedimentary rocks (fig. 65). For the most part, major faults border the basins on the west and northwest, and the predominant direction of dip of the sedimentary rocks in the basins is toward these major border faults. Exceptions are the Durham and the Sanford Basins in North Carolina, which are bounded on the east by major faults; the dip of the beds in these basins is to the east or the southeast.

The lower Mesozoic rocks lie unconformably on Precambrian and Paleozoic crystalline rocks, and locally on Paleozoic sedimentary rocks in New Jersey. Sedimentary rocks in the basins consist predominately of interbedded shale, sandstone, and siltstone, all typically red, reddish brown, or maroon but locally gray or black. Conglomerate, dolomite, lacustrine black mudstone, and coal are present locally. In many places, the sedimentary rocks are interbedded with basalt flows (figs. 65 and 66) or have been intruded by diabase dikes and sills. Thicknesses of Triassic and Jurassic rocks in the larger basins have been calculated to be more than 20,000 feet.

Deposition of sediments in the early Mesozoic basins was controlled by a combination of intermittent faulting and subsidence of the basins, altitude of the bordering highlands, climate, and drainage patterns. A tropical climate prevailed in the basins during Triassic and Jurassic time. Temperatures were high and rainfall varied, but tended to be low. Sediments deposited in lakes later became siltstone and mudstone, those deposited in swamps became black mudstone and coal, and river deposits and alluvial fans became sandstone and conglomerate. Lake levels varied; some lakes dried up seasonally, and the exposed sediment was oxidized and turned red. The sediments show evidence of cyclic repetition, which has been attributed to periodic changes in the Earth¹s climate.

The Newark Basin (fig. 60) extends from the Hudson River Valley to the divide between the Schuylkill and the Susquehanna Rivers in Pennsylvania. The Newark Basin contains three principal stratigraphic units. From oldest to youngest, these are the Stockton Formation of Triassic age, which is

mainly soft feldspathic sandstone, shale, and some conglomerate; the Lockatong Formation of Triassic age, which is predominately gray and black siltstone and shale; and the Brunswick Group of Jurassic and Triassic age, which contains argillite, shale, siltstone, sandstone, conglomerate, and three basalt units. The igneous rocks that occur as sills and flows parallel to and interbedded with the sedimentary beds and as dikes and stocks that cut across them are resistant to erosion, and form hills. The Lockatong Formation, which is the least productive water-yielding sedimentary rock in the basin, is more resistant to erosion than the other sedimentary rocks and also underlies low hills.

The Gettysburg Basin stretches from the narrow neck that connects it to the Newark Basin about 80 miles westward and southward to near Frederick, Md. (fig. 60). The New Oxford Formation of Triassic age, which is composed of feldspathic sandstone, siltstone, and shale, is the lowermost formation in the Gettysburg Basin and is overlain in most places by red shale, siltstone, and fine sandstone of the Gettysburg Formation of Triassic and Jurassic age. The conglomeratic Hammer Creek Formation of Triassic age overlies the New Oxford Formation in the narrow neck between the Newark and the Gettysburg Basins. Basalt flows occur in the upper part of the Gettysburg Formation.

The Culpeper Basin of northern Virginia and adjacent Maryland (fig. 60) is an elongate, fault-bounded trough that trends north-northeast from the southern border of Madison County, Va., about 90 miles to Frederick County, Md. All the formations in the basin are part of the Culpeper Group. The lower part of the group consists of sandstone, siltstone, and conglomerate of Late Triassic age; the upper part consists of Lower Jurassic sedimentary rocks and interbedded basaltic lava flows.

The Richmond Basin stretches from just north of Richmond, Va., 35 miles south to the DinwiddieAmelia County border (fig. 60). The lowest stratigraphic unit in the basin is the Middle Triassic Tuckahoe Group, which contains siltstone, shale, and coal beds. It is overlain by the Upper Triassic Chesterfield Group, which consists of black shale and sandstone of the Vinita beds and the Otterdale Sandstone. The sedimentary rocks are cut by a few Late Jurassic diabase dikes. Small outliers near the Richmond Basin may have been connected to the original basin because they consist of similar rocks.

The Dan RiverDanville Basin extends from southern Appomattox County, Va., about 100 miles southwest into Stokes County, N.C. In Virginia, the basin is named Danville, and in North Carolina, Dan River. The basin contains sedimentary rocks of the Upper Triassic Dan River Group; in Virginia, the Dry Fork Formation is also present. The sedimentary rocks consist of sandstone, siltstone, mudstone, shale, and local conglomerate and are locally cut by diabase dikes.

Rocks in the four southernmost early Mesozoic basins in North Carolina contain water sufficient only for domestic supplies in the upper 300 feet. The rocks are similar in composition but are more compact and tightly cemented than those in the basins to the north and do not yield sufficient quantities of water to be considered a principal aquifer.

Carbonate-Rock Aquifers

Limestone, dolomite, and marble of Paleozoic and Precambrian age form carbonate-rock aquifers that extend over about 3 percent of the Piedmont and the Blue Ridge Provinces in Segment 11. Although these carbonate rocks are of small extent, they are significant local sources of water. Carbonate-rock aquifers are in five areas of the Piedmont and the Blue Ridge Provinces of Segment 11 (fig. 60). In addition to these areas, small, isolated elongate stringers of limestone and marble form minor

aquifers locally, particularly in Virginia, and generally trend parallel to the Blue Ridge front.

In northern New Jersey and eastern Pennsylvania (fig. 60, Area 1), Precambrian and lower Paleozoic carbonate rocks are interspersed with granite and gneiss of the Reading Prong and locally have been juxtaposed by faults with lower Mesozoic rocks of the Newark Basin in Pennsylvania. These carbonate rocks form a series of long, narrow blocks in the noncarbonate rocks that surround them. The major faults and other geologic structures generally trend northeastsouthwest but have been tilted or rotated in some areas so that they trend northwest-southeast. The principal water-yielding units are listed in table 2. A large area of carbonate rocks is centered in the HanoverYorkLancaster Valley area of Pennsylvania (fig. 60, Area 2). The lithology and water-yielding characteristics of the principal carbonate-rock formations are listed in table 3. Three carbonate-rock formations (table 4) are present in Area 3, which encompasses the Frederick Valley in Frederick County, Md., and extends northward into Pennsylvania (fig. 60). Small areas of carbonate rock in Area 4 (fig. 60) include those underlain by the Cockeysville Marble of Ordovician and Cambrian age in southern Chester County, Pa., in Baltimore and Howard Counties, Md., and New Castle County, Del. Carbonate rocks of Cambrian age in North Carolina are exposed mostly in two windows, or openings, that were eroded through major thrust sheets to expose the underlying rock in Area 5 (fig. 60). The exposed rocks are the Shady Dolomite and the Rome Formation in the Hot Springs Window in Madison County and the Shady Dolomite in the Grandfather Mountain Window in northern McDowell County. An elongated outcrop of the Cambrian or Precambrian Murphy Marble in Cherokee County, N.C., is in a structural fold.

GROUND-WATER FLOW AND WELL YIELDS

Recharge is highly variable in the Blue Ridge and the Piedmont Provinces because it is determined by local precipitation and runoff, which are highly variable and are influenced by topographic relief and the capacity of the land surface to accept infiltrating water. The greatest annual precipitation and runoff in Segment 11 are in the Blue Ridge Province, notably in southwestern North Carolina. Because the western part of the Piedmont Province from North Carolina to central Virginia is in the rain shadow of the Blue Ridge Mountains, it receives less precipitation than areas on either side.

Most of the Piedmont and the Blue Ridge Provinces are covered by regolith. Compared to the Blue Ridge, the gentler topographic relief of the Piedmont and less precipitation make the Piedmont less subject to rapid denudation than the Blue Ridge and thus favor the accumulation of a thicker regolith. The combination of large areas of thin regolith and dense bedrock with minimal permeability in the Blue Ridge Province do not favor large amounts of ground-water recharge.

Most of the recharge in the Piedmont and the Blue Ridge Provinces takes place in interstream areas. Almost all recharge is from precipitation that enters the aquifers through the porous regolith. Much of the recharge water moves laterally through the regolith and discharges to a nearby stream or depression during or shortly after a storm or precipitation event. Some of the water, however, moves downward through the regolith until it reaches the bedrock where it enters fractures in crystalline rocks and sandstones or solution openings in carbonate rocks.

Crystalline-Rock Aquifers

In crystalline-rock areas, the regolith and fractures in the bedrock serve as the principal places for the storage transmission of water, and ground-water movement is generally along short flow paths from interstream recharge areas to the nearest stream. This situation applies to most of the Piedmont and the Blue Ridge Provinces. Where bedrock fractures have one or more preferred directions of orientation, as is often the case, ground water will tend to flow more readily in the direction of the fractures; this is a condition called anisotropy.

An example of anisotropy is shown by the results of an aquifer test performed on wells completed in crystalline rocks of the Piedmont Province near Greensboro, N.C. (fig. 67). The contours in the figure are lines of equal water-level decline measured in numerous observation wells after a production well with a 6-inch diameter had been pumped for 57 hours at a rate of about 39 gallons per minute. This well was completed in fractured gneiss; the joints and fractures in the rock trend northeast. The contours that show water-level decline form an oval shape that is elongated to the northeast, which indicates that the bedrock is more permeable in that direction.

Aquifers in Early Mesozoic Basins

The rocks of the early Mesozoic basins include beds of sandstone, arkose, and conglomerate that originally had considerable effective porosity between the grains. However, due to compaction and cementation, the pores in most of these strata are now reduced in size and poorly interconnected, so that only a small part of the ground water moves between pores. The diabase and basalt that intrude the sedimentary rocks had very low primary porosity. The ground water in the lower Mesozoic rocks moves primarily along joints, fractures, and bedding planes. The water-bearing fractures and bedding planes in each tabular aquifer are more or less continuous, but the hydraulic connection across the confining units between individual aquifers is poor (fig. 68). Because of preferential alignment of these openings, the aquifers are anisotropic; most of the water movement is parallel to the strike of the beds.

Because some sedimentary rocks contain more interconnected openings than others, the ground-water system in the early Mesozoic basins consists of a series of aquifers of tabular form that alternate with confining units that are several tens of feet thick. The aquifers and confining units dip toward the border faults that bound the basins at angles that range from 10 to 15 degrees. The aquifers generally extend downdip for a few hundred, rarely for a few thousand, feet but are continuous along strike for thousands of feet. Wells drilled perpendicular to the strike of the beds might penetrate separate aquifers (fig. 69), depending on the angle of the dip of the aquifers and the spacing of the wells. Consequently, well fields designed with wells aligned perpendicular to the strike would likely have minimum interference between wells. Wells B and C in figure 69 are completed in the same local aquifers, and each well, when pumped, will interfere with the other. By contrast, wells C and D are not completed in the same aquifer, and pumping either well will not affect water levels or well yields in the other well.

The aquifers in the early Mesozoic basins north of North Carolina generally yield more water than other noncarbonate aquifers in the Piedmont and the Blue Ridge Provinces, possibly because the original, intergranular pore space in the Meso-zoic rocks may be sufficient to store and transmit appreciable quantities of water. The lower Mesozoic rocks make up some of the few aquifers in the Piedmont and the Blue Ridge Provinces in which the yield per foot appears to increase with depth. In the Pennsylvania part of the Newark Basin, wells between 200 and 550 feet

deep are most likely to obtain maximum yields; the average yield of wells deeper than about 200 feet is distinctly higher than that of shallower wells. This may be the result of a rather abrupt change in the nature of rock weathering at depth. In Pennsylvania, the zone of greatest decomposition of the rock‹the zone where the original void spaces are believed to be partly plugged with residual clay‹apparently is above 200 feet. In Maryland, some water-yielding zones are at depths of between 600 and 900 feet in aquifers of the early Mesozoic basins.

The dikes in the early Mesozoic basins resemble walls of diabase that are nearly vertical through the sedimentary rocks into which they are intruded. The dikes themselves generally yield little water, but in many places, the strata adjacent to the dikes have been made brittle by baking from the heat of the dike and have been fractured by the intrusion. The dikes also function as dams because they block ground-water flow and tend to impound water in the sediments on their upgradient sides. In many places, wells drilled near dikes produce more water than wells drilled elsewhere in lower Mesozoic strata.

Typical yields of large-diameter wells in the Newark and the Gettysburg Basins of Pennsylvania are generally greatest (about 80 gallons per minute) from wells completed in massive sandstones and 0 conglomerates and are least (about 5 gallons per minute) from wells completed in diabase. Yields of wells completed in shale or argillite are typically about 12 gallons per minute. Although limestone and dolomite conglomerate is the largest-yielding aquifer (median yield 30 gallons per minute from wells 250 to 500 feet deep) in the Culpeper Basin of Maryland and Virginia, noncarbonate conglomerates tend to be mediocre aquifers (median yield 8 gallons per minute for the same depth range), probably because they are tightly cemented. Thin-bedded siltstone tends to yield more water than sandstone (75 gallons per minute versus 15 gallons per minute).

Many wells completed in aquifers in the early Mesozoic basins yield large quantities of water during pumping tests that range from 24 to 48 hours but fail to maintain large yields over long periods of time. The yields of several wells that were tested at 75 gallons per minute soon after completion declined in a few years to about 15 gallons per minute. These wells might have been completed in aquifers that did not contain much water in storage and had low rates of recharge. Another possibility is that after a period of pumping, some of the fractures in the aquifers might have been partly closed by clay and silt that were disturbed and transported by the pumping action or by the precipitation of minerals from the water.

Carbonate-Rock Aquifers

Carbonate rocks are soluble in weak acid solutions compared to rocks of other composition. Water that percolates downward through the soil contains small amounts of dissolved carbon dioxide and organic acids, which make the water weakly acidic and thus capable of dissolving carbonate minerals. Dissolution commonly begins along pre-existing openings, such as fractures or bedding planes, and enlarges these openings to form a network of interconnected openings, which greatly increases the porosity and permeability of the rock. A well that intersects a water-filled solution channel or cavern will produce an abundant supply of water. However, where the water table is deep, the cavities are mostly drained. Not all carbonate rocks form productive aquifers. The water-yielding character of these rocks depends on the degree of fracturing and dissolution of the rocks.

The carbonate rocks of the Piedmont and the Blue Ridge Provinces have virtually no primary permeability or porosity, and water in these rocks

moves through secondary openings, such as bedding planes, joints, faults, and other partings, within the rock that have been enlarged by dissolution. In rocks that have a large content of sand, clay, or other noncarbonate minerals, dissolution is inhibited and enlargement of openings might not be extensive. In such rocks, all the water might occur in fracture openings similar to those in unweathered crystalline rocks.
Ground water in carbonate rocks is under unconfined to confined conditions. The water is confined or semiconfined in the regolith and in the zone of fractured rock that immediately underlies it. Deep fractures and solution channels in the unweathered rock contain semiconfined to confined water and, in some places, transmit water several tens of miles from recharge areas to discharge areas.
Data on the regional hydraulic properties of the carbonate-rock aquifers are not available. From the observed behavior of pumped wells completed in confined carbonate-rock aquifers and the effects of the pumping on adjacent wells, however, it appears that a decline of artesian pressure in response to pumping generally is transmitted rapidly to distant points, but the decline is seldom equal in all directions. In fact, closely spaced wells might encounter different systems of rock openings, in which case pumping from one well will not affect the water levels in an adjacent well.
Even though cavities in carbonate rocks commonly contain an abundant supply of water, they also might contain large amounts of exceedingly fine mud that must be removed or stabilized before clear water can be obtained from the cavities. Solution cavities also can act as channels for the transmission of sewage, surface contaminants, or other types of pollution.

RELATION OF HYDROGEOLOGIC SETTING AND WELL YIELD

Several factors affect the yields of wells completed in the rocks of the Piedmont and the Blue Ridge Provinces. Variations in yield depend on the type of rock in which a well is completed; the thickness of the regolith; the number, size, and spacing of bedrock fractures and the degree to which the fractures are connected; and the topographic setting of the well.
The largest sustained well yields can be obtained from carbonate-rock aquifers, whereas the smallest sustained yields generally are from crystalline-rock and undifferentiated sedimentary-rock aquifers. Aquifers in early Mesozoic basins yield intermediate volumes of water. Well yields for all types of crystalline rocks generally are small; a recent study showed an average yield of 18 gallons per minute for wells completed in these rocks in North Carolina. Coarse-textured crystalline rocks, such as gneiss and schist, generally yield more water than fine-grained, metavolcanic rocks.
Crystalline bedrock is covered by a thick to thin layer of regolith almost everywhere in the Piedmont and the Blue Ridge Provinces. Although the porosity of the regolith varies, depending mostly on the type of bedrock, it is everywhere more porous than the bedrock. The porosity of the regolith ranges from about 20 to 30 percent, but the porosity of the bedrock ranges from only about 0.01 to 2 percent. Accordingly, the regolith has the capacity to store a much larger volume of water than the bedrock, which contains water only in fractures, as shown in figure 70. The cylinder-and-rod sketch on the right of the figure illustrates this concept. Most of the water is stored in the regolith reservoir, which is represented by the cylinder, from which a small part of the water moves downward and is stored in bedrock fractures, which are represented by the interconnected rods. The size, number, and interconnection of the fractures decrease with depth. The thicker the regolith, the greater the volume of water in storage and the more likely well yield can be

sustained. Where the regolith is thin, crystalline-rock wells are more likely to go dry during the summer months or periods of drought.

Most of the fractures in crystalline rocks or consolidated sedimentary rocks are steeply inclined, intersecting openings that are more numerous at shallow depths. Examples of some of the possible distributions of fractures with respect to wells that are completed in crystalline rocks are shown in figure 71. Only about 3 percent of wells encounter no fractures (fig. 71A) and are either dry or will not have a sustained yield. Where the rock is fractured only near the surface (figs. 71B and C), wells will yield from 10 to 20 gallons per minute for a short time until the fractures are drained, when well yield suddenly declines. Where several fractures connected to the regolith are penetrated by a well (fig. 71D), moderate sustained yields are possible, whereas a well that encounters numerous closely spaced fractures (fig. 71E) is most likely to have a high sustained yield. Where only a few fractures exist (fig. 71F), sustained yields are likely to be low. When the water level in a well that was completed in rocks with intergranular porosity is lowered by pumping, the hydraulic gradient toward the well is increased, and the flow toward the well also is increased. However, if the water level is lowered below the deepest fracture in the examples shown, then there is no effect on the gradient, and flow toward the well will not increase.

The Piedmont and the Blue Ridge Provinces contain many faults, most of which show only small displacement. The fault zones themselves commonly have low permeability because they can be filled with clay gouge, recemented breccia, or recrystallized rock, all of which impede the flow of ground water. Most of the water-bearing fractures in the Piedmont and the Blue Ridge are joints, stress-relief fractures, or cleavage planes and are not directly associated with a fault. Some fracture zones appear as lineaments that can be identified on aerial photographs.

Wells in valleys, draws, and depressions tend to have higher-than-average yields for the following reasons: (1) valleys and draws commonly coincide with fracture zones in the rocks, (2) the water table is nearer the surface in topographically low areas and thus provides greater available drawdown for a given well depth in a valley than on a hill, (3) the water table ordinarily slopes toward wells in valleys from at least two directions, whereas it slopes away from wells on hilltops in at least two directions, and water levels in wells on hilltops, therefore, are more likely to decline rapidly than those in wells in valleys, and (4) seasonal fluctuations of the water table are greater on hilltops where well yields are likely to be reduced during dry seasons. Draws on the sides of the valleys of per-ennial streams where a thick blanket of regolith underlies the adjacent ridges are the best sites for wells with large yields. A statistical analysis that related well yield to topographic setting in the Piedmont and the Blue Ridge Provinces of North Carolina indicated that wells drilled in valleys or draws have average yields that are three times those of wells located on hills or ridges. Solution openings in carbonate rocks are usually more abundant in valleys, depressions, and draws, which are, therefore, favorable sites for wells in this type of rock.

Ground-water discharge to a stream (base flow) is an indi-cation of the maximum sustained ground-water yield. The per-centage of streamflow composed of base flow is determined by the infiltration capacity of the soil and the capacity of the underlying aquifers to store and transmit water. In part of the Piedmont Province in southeastern Pennsylvania, base flow ranges from 57 to 66 percent of streamflow in drainage basins that are underlain predominately by crystalline rocks and 77 percent in a typical basin that is underlain by carbonate rocks. Base flow ranges from 33 to 67 percent of streamflow in three drainage basins that are underlain

by crystalline rocks in the Piedmont and the Blue Ridge of Maryland and from 32 to 65 (average 44) percent in 10 crystalline-rock drainage basins in the Piedmont of North Carolina. The average base flow in the early Mesozoic Culpeper Basin of Maryland and Virginia is 68 percent of streamflow.

GROUND-WATER QUALITY

The quality of water from aquifers in the different rock types of the Piedmont and the Blue Ridge Provinces is similar (fig. 72). The water generally is suitable for drinking and other uses, but iron, manganese, and sulfate locally occur in objectionable concentrations. Large iron concentrations can be caused by corrosion or the action of iron-fixing bacteria on iron and steel casings and well fittings. Some crystalline rocks and some sedimentary rocks in early Mesozoic basins contain minerals that, when weathered, can contribute iron and manganese to ground water, particularly if the water is slightly acidic. Treatment of the water usually will alleviate problems of excessive iron and manganese concentrations.

The crystalline-rock and undifferentiated sedimentary-rock aquifers consist primarily of metamorphic and igneous rocks but include small areas of sedimentary rocks, principally conglomerate, sandstone, and shale. These rocks consist mostly of silica and silicate minerals that are not readily dissolved. Dissolved-solids concentrations in water from these aquifers average about 120 milligrams per liter. The water is soft; hardness averages about 63 milligrams per liter. The median hydrogen ion concentration, which is measured in pH units, is 6.7; consequently, the water is slightly acidic. The median iron concentration is 0.1 milligram per liter, but concentrations as large as 25 milligrams per liter have been reported. The water is mostly a calcium plus magnesium bicarbonate type (fig. 72A).

The aquifers in early Mesozoic basins are mostly sandstone, siltstone, and shale, with some limestone and conglomerate. The minerals that compose these rocks are slightly more soluble than those of the rocks that compose the crystalline-rock and undifferentiated sedimentary-rock aquifers. Dissolved-solids concentrations in water from the aquifers in early Mesozoic basins average about 230 milligrams per liter, and hardness averages about 160 milligrams per liter, which is considered to be hard. The median hydrogen ion concentration, which is measured in pH units, is 7.6. The dissolution of calcium and magnesium carbonate raises the pH of the water and renders it less acidic. Chloride and sulfate concentrations average about 12 and 29 milligrams per liter, respectively, but chloride concentrations as large as 1,400 milligrams per liter and sulfate concentrations as large as 1,200 milligrams per liter have been reported in water from deep wells. The median iron concentration is 0.1 milligram per liter, but concentrations as large as 5.3 milligrams per liter have been reported. The water from the aquifers in early Mesozoic basins is mostly a calcium bicarbonate type (fig. 72B).

The dominance of soluble calcium and magnesium carbonate minerals in the carbonate-rock aquifers is reflected in the composition of the water from the aquifers. Dissolved-solids concentrations in the water average about 330 milligrams per liter, and hardness (caused principally by calcium and magnesium ions) averages about 280 milligrams per liter, which is considered to be very hard. The median hydrogen ion concentration, which is measured in pH units, is 7.5. The median iron concentration is 0.1 milligram per liter, but concentrations as large as 8 milligrams per liter have been reported. The water is mostly a calcium bicarbonate type (fig. 72C).

FRESH GROUND-WATER WITHDRAWALS

Total freshwater withdrawals from the bedrock aquifers of the Piedmont and the Blue Ridge Provinces were about 634 million gallons per day during 1985. About 52 percent of the otal, or about 329 million gallons per day, was withdrawn from the crystalline-rock and undifferentiated sedimentary-rock aquifers. Withdrawals from the aquifers in early Mesozoic basins were about 223 million gallons per day, or about 35 percent of the total. The remaining 13 percent, or about 82 million gallons per day, was withdrawn from the carbonate-rock aquifers.

The distribution of withdrawals from the three types of bedrock aquifers varies greatly from State to State (fig. 73). More than one-half of the water withdrawn from the crystalline-rock and undifferentiated sedimentary-rock aquifers during 1985 was pumped in North Carolina (fig. 73A). The aquifers in early Mesozoic basins (fig. 73B) were important sources of supply in Pennsylvania and New Jersey during the same period. Withdrawals from the carbonate-rock aquifers during 1985 were greatest in Pennsylvania (fig. 73C). The withdrawals are directly proportional to the area underlain by each bedrock aquifer type in each State.

Withdrawals for different uses during 1985 varied among the bedrock aquifer types (fig. 74). Most of the water withdrawn from the crystalline-rock and undifferentiated sedimentary-rock aquifers was used for domestic and commercial supplies. By contrast, most of the water withdrawn from the aquifers in early Mesozoic basins and the carbonate-rock aquifers was used for public supply. The percentage of water withdrawn for industrial, mining, and thermoelectric power uses was nearly the same for all three aquifer types. Agricultural withdrawals were the smallest use category for each of the three aquifer types.

Valley and Ridge aquifers

INTRODUCTION

Aquifers in the Valley and Ridge Physiographic Province consist of permeable rocks within a sequence of folded and faulted sedimentary formations of Paleozoic age. The upper strata were folded into anticlines and synclines as they slid over underlying beds along large, nearly horizontal faults. The folded rocks form a series of parallel valleys separated by steep to well-rounded ridges that rise from about 100 to 2,000 feet above the valley floors. The province is named for these alternating valleys and ridges that trend northeastward from southwestern Virginia to east-central Pennsylvania and then eastward toward northern New Jersey (fig. 75) in Segment 11. The province extends southwestward through Tennessee (Segment 10 of this Atlas) into northern Georgia and Alabama (Segment 6 of this Atlas) and is briefly discussed in the chapters that describe aquifers in these segments. The province also is called the Folded Appalachians because folded strata dominate the topography (fig. 76). The same Paleozoic formations of the Valley and Ridge Province are present in the Appalachian Plateaus Province to the west, where they are much more gently folded and nearly flat-lying in places. The rocks of the Valley and Ridge Province are chiefly sandstone, shale, and carbonate rocks; locally, coal-bearing beds are present. A thick cover of regolith has developed on the rocks, particularly in the valleys.

The Valley and Ridge Province reaches a maximum width of about 80 miles in central Pennsylvania and is bounded by the higher land surfaces of the Blue Ridge and the Piedmont Provinces on the southeast and the Appalachian Plateaus Province on the northwest. In most places, the Valley and Ridge is separated from the Appalachian Plateaus by an escarpment called the

Allegheny Front in Pennsylvania, Maryland, and West Virginia and the Cumberland Escarpment in Virginia (fig. 75).

The Great Valley is the most pronounced and persistent valley in the Valley and Ridge Province. It is floored with easily eroded rock, such as shale, slate, or carbonate rocks. The valley generally ranges from 10 to 20 miles wide but is much narrower in and near Roanoke County, Va. Part of the eastern boundary of the Great Valley is a zone of thrust faulting; crystalline rocks of the Blue Ridge Province have been shoved northwestward tens of miles over Paleozoic sedimentary rocks in places. The western boundary of the valley is the first persistent mountainous ridge of resistant sedimentary rock. The part of the Valley and Ridge northwest of the Great Valley consists of persistent mountain ridges underlain by resistant sandstone, conglomerate, and quartzite, which alternate with valleys floored with shale or slate and carbonate rocks. Drainage patterns in the Valley and Ridge Province directly reflect the alternating bands of resistant and easily eroded rocks in the folded strata of the province. Major streams and their tributaries intersect at right angles to form a rectangular stream network called a trellis drainage pattern (fig. 77). For example, in the Shenandoah Valley, which is part of the Great Valley in Virginia and West Virginia, the Shenandoah River flows northward to join the Potomac River. The Shenandoah River follows a band of weak and soluble rocks as the course of least resistance, as do most of the other rivers in the Valley and Ridge. Such streams are called subsequent streams and their courses are determined by regional geologic structure as expressed by the patterns of resistant and weak rocks.

A few major rivers, however, such as the Lehigh and the Susquehanna Rivers in Pennsylvania, the Delaware River between Pennsylvania and New Jersey, and part of the Potomac River in West Virginia, Maryland, and Virginia, cut directly across the ridges and valleys (fig. 75). Such streams are called superimposed streams. The Susquehanna River, for example, crosses six major ridges within 50 miles upstream from Harrisburg, Pa.. The notch carved through a resistant ridge by a river is called a water gap (fig. 78). When a stream no longer flows through a water gap, usually because the stream has been captured by headward erosion of a larger stream, the abandoned water gap is called a wind gap (fig. 79).

GEOLOGIC STRUCTURE

The geologic structure of the Valley and Ridge Province is complex, but the process principally responsible for the present configuration of the rock layers was displacement to the northwest. Some movement took place along low-angle reverse faults; rocks of the Blue Ridge Province and the Reading Prong were thrust northwestward over layered sedimentary rocks of the Valley and Ridge Province for tens of miles, and the layered rocks, in turn, were broken into slices that slid over each other. At and near the land surface, the beds were folded into nearly parallel, northeast-trending anticlines and synclines. In some areas, the folded beds are bounded below by nearly horizontal thrust faults. At the time of deformation, slippage occurred along bedding planes; accordingly, the folded beds above were detached from those below.

Folding is most intense in the parts of the Valley and Ridge Province in New Jersey and central to northeastern Pennsylvania. Because of the intense deformation, cleavage in places is more prominent than bedding, and some of the rocks have undergone low-grade metamorphism. In the Valley and Ridge Province in southwestern Virginia and farther to the southwest in Tennessee, folding is less intense, but major faults are common, and vertical to overturned beds appear in many places, particularly on the

northwestern sides of anticlines. The western boundary of the Valley and Ridge Province is marked by a rather abrupt reduction in the deformation of the beds. This corresponds approximately with the Allegheny Front, which marks the boundary between the Valley and Ridge and the Appalachian Plateaus Province. Faults occur at the boundary in some places, but have not been identified everywhere.

The present Appalachian Mountains are merely the roots of ancient mountains. Only parts of the original folds remain, and the mountain ridges are the eroded edges of resistant rock layers, principally hard sandstone, conglomerate, or quartzite. Axes of anticlines commonly are valleys, especially where the rock that forms the center of the upfold has little resistance to erosion. Axes of synclines commonly coincide with ridges or mountains where the rock at the center of the downfold is resistant. Formations that have been eroded away elsewhere might be preserved in synclines. Broad folds, whether syn-clines or anticlines, can appear as a series of narrow ridges and valleys produced by the differences in erodability of their rock layers.

HYDROGEOLOGIC UNITS

The principal aquifers in the Valley and Ridge Province from Virginia through New Jersey are carbonate rocks and sandstones that range in age from early to late Paleozoic (fig. 80). Not all the geologic formations recognized in each of the States are shown; some formations that are thin or are of small extent are omitted. Most of the more productive aquifers are in carbonate rocks, primarily limestone, and most are in valleys. Although the water-yielding character of the carbonate rocks depends on the degree of fracturing and development of solution cavities in the rock, the limestone formations generally yield moderate to large volumes of water. Sandstone formations also can yield large quantities of water to wells where the sandstone is fractured. Locally, fractured shale beds form productive aquifers. Because the rocks change in lithology, thickness, water-yielding character, and formation name from place to place, it is difficult to make statements about the water-yielding character of any of the named stratigraphic units that apply throughout Segment 11. Generally, however, limestone aquifers predominate in rocks of Cambrian, early Ordovician, late Silurian, and early Devonian age (fig. 80), whereas sandstone aquifers are prominent in rocks of middle and late Ordovician, middle Devonian, and younger age.

The sedimentary formations of the Valley and Ridge Province are commonly thick and steeply tilted; thus, a water well usually penetrates only the consolidated rock formation exposed at the surface. Therefore geologic maps are good guides to the type of rock from which a well can withdraw water.

The Great Valley makes up most of the Valley and Ridge Province in New Jersey and is floored with shale and carbonate rock of early Paleozoic age. A thick sequence of carbonate rocks that consist of the Leithsville Formation, the Allentown Dolomite, and the Beekmantown Group contains the most productive aquifers. Yields of as much as 850 gallons per minute have been reported for wells that obtain water from combinations of these geologic units. West of the Great Valley, predominately Silurian and Devonian rocks (mostly shale, sandstone, and conglomerate) are exposed. Wells completed in these clastic rocks and in thin limestone units interbedded with them yield 15 to 100 gallons per minute.

The Valley and Ridge Province is widest in Pennsylvania and contains more geologic units than elsewhere in Segment 11 (fig. 80). The Great Valley in Pennsylvania is floored with ower Paleozoic carbonate rocks and shale. Principal water-yielding geologic units are limestone and dolomitic

limestone of the Waynesboro Formation through the St. Paul Group (Cambrian and Ordovician ages), with well yields reported to range from 25 to 210 gallons per minute. Yields from sandstone of the Martinsburg Formation, by contrast, only range from 10 to 30 gallons per minute. Northwest of the Great Valley, the uppermost Paleozoic rocks in central to northeastern Pennsylvania are coal-bearing beds of Pennsylvanian age mostly associated with the anthracite coal fields where deeply infolded beds of coal were preserved from erosion. The processes of folding and deep burial drove off most of the volatile content of the bituminous coal in the more intensely folded areas and converted it to anthracite. This conversion did not take place everywhere, however. For example, in south-central Pennsylvania, Pennsylvanian rocks range from 1,000 to 1,500 feet thick in a synclinal mountain in parts of Huntingdon, Bedford, and Fulton Counties (fig. 75), but the coals they contain are closer in rank to bituminous than anthracite. Pennsylvanian rocks consist of sandstone, which is coarse or conglomeratic in some places; gray and black shale and claystone; thin beds of limestone; and coal. Sandstone is more abundant in the Pottsville Group than other geologic units, and yields of wells completed in the Pottsville commonly range from 50 to 100 gallons per minute.

Mississippian rocks in Pennsylvania have a distribution pattern similar to that of Pennsylvanian rocks but have a somewhat wider extent. They consist primarily of shale, sandstone, and conglomerate; yields of wells completed in sandstones of the Mississippian parts of the Mauch Chunk and the Pocono Formations range from 20 to 90 gallons per minute. Devonian rocks are extensively exposed west of the Great Valley in southern Pennsylvania and north and east of the Susquehanna River. The ridges of the province are typically formed on the upturned edges of layers of hard Silurian sandstone and quartzite, but the Silurian section also includes shale and limestone. Yields from limestones of Silurian and Devonian age (Mifflintown Formation through Onondaga Group, fig. 80) commonly range from 20 to 120 gallons per minute to wells; local yields of as much as 1,400 gallons per minute have been reported. Wells completed in sandstones of the Keefer Formation and Oriskany Group yield as much as 120 gallons per minute.

The Valley and Ridge Province extends throughout most of the Maryland Panhandle, but the Great Valley part of the province is restricted to Washington County (fig. 75). The Great Valley in Maryland is floored with predominately carbonate-rock and shale formations of Cambrian and Ordovician age. The principal water-yielding units in the Great Valley are the Tomstown Formation through the Beekmantown Group (fig. 80); well yields commonly range from 25 to 400 gallons per minute. West of the Great Valley, sandstones of Ordovician to Devonian age are the principal aquifers but commonly yield less than 120 gallons per minute; locally, yields of as much as 100 gallons per minute are reported for wells in limestone of late Silurian and early Devonian age.

In West Virginia, the Great Valley part of the Valley and Ridge Province is only in Jefferson and Berkeley Counties (fig. 75) and is underlain mostly by carbonate rocks of Cambrian and Ordovician age (Tomstown Dolomite through Black River Limestone, fig. 80) that typically yield about 35 gallons per minute to wells. Locally, wells completed in these rocks yield as much as 600 gallons per minute, however, and some springs that issue from the rocks discharge from 1,000 to 5,000 gallons per minute. Fractured shale of the Martinsburg Formation in the Great Valley locally yields 20 gallons per minute to wells. Elsewhere in the province, yields of wells com-pleted in Silurian and lower Devonian limestones commonly only range from 10 to 20 gallons per minute; some springs that issue from these rocks discharge as much as 15,000 gallons per minute.

Devonian and Mississippian sandstones commonly yield 15 gallons per minute or less to wells.

The Valley and Ridge Province in western Virginia extends from Clark and Frederick Counties to the North Carolina State line (fig. 75). The Great Valley in Virginia is floored primarily by carbonate rocks and shale of Cambrian and Ordovician age, which commonly yield from 150 to 1,000 gallons per minute to wells. Locally, wells completed in fractured shale of the Martinsburg Formation yield up to 155 gallons per minute. Limestone beds of late Silurian and early Devonian age west of the Great Valley typically yield only 20 gallons per minute or less to wells.

GROUND-WATER FLOW

Water in the Valley and Ridge aquifers moves mostly along fractures and bedding planes in all rock types, and in solution openings in the carbonate rocks. These types of openings are secondary porosity that formed after the rocks were deposited and lithified; almost all the original primary pore space between individual mineral grains or rock particles was filled with fine-grained material or mineral cement during the process of lithification of the rocks.

Circulating, slightly acidic ground water that moves along fractures and bedding planes in the carbonate rocks has partly dissolved these rocks in places and has created a network of large, interconnected openings that yield substantial quantities of water to wells. The alternating sequences of upfolded and downwarped rocks in the Valley and Ridge Province, coupled with the stream network that has developed in the folded rocks, create a series of shallow, isolated, local ground-water flow systems. Most of the ground water under the ridges flows across the strike of the rocks, but in the valleys, it usually moves along the strike. The flow within these local ground-water systems is predominately within a few hundred feet of the land surface, but circulation in some of the systems is deep enough for the water to become geothermally heated. The regolith that covers the consolidated rocks in most places has some primary porosity. The local flow systems receive recharge mostly to the regolith on the tops or flanks of ridges. The water then moves into the underlying bedrock or flows within the regolith downgradient toward the intervening valleys and discharges to streams or springs. Although the hard sandstone, conglomerate, and quartzite that typically cap the ridges have low permeability, the steep gradient provided by the dip of the beds and the relief usually is sufficient to move ground water into the adjoining valleys (fig. 81). Thick wedges of colluvium that locally cover the lower flanks of the ridges can temporarily store large quantities of water that later move into bedrock aquifers in the valleys. Perched water tables can over-lie local clayey zones in the colluvium and commonly are expressed by permanent to intermittent ponds. The perched water can be as much as 400 feet above the regional water table in the underlying consolidated rock.

The carbonate rocks that are mostly in the valleys receive recharge from precipitation that falls directly on the valley floors (fig. 82), as well as from runoff from the adjacent ridges. Highly permeable solution zones that have developed by the enlargement of joints and other openings collect and channel the water. Sinkholes, which are closed depressions in the land surface that form where part of the roof of a solution cavity has collapsed, form a direct connection from the land surface to a carbonate aquifer. Surface runoff can move directly into a sinkhole, as can ground water in the regolith that overlies the carbonate rocks. Recharge to the aquifer through sinkholes takes place very quickly, and any contaminants at or near the land surface can move directly into the aquifer. Surface water that is channeled into small streams in the valleys can leak

downward through the streambed to recharge the aquifer in places where the water table of the aquifer is lower than the water level in the stream. The flow paths of ground water in the Valley and Ridge Province are generally short, except for those in carbonate-rock aquifers where networks of solution openings prevail. Water can flow through connected solution conduits, such as those mapped in figure 83, for distances that range from thousands of feet to several miles. As it moves downgradient from recharge areas, the water tends to be concentrated in ever-larger conduits until it typically discharges as flow from a large spring. The larger solution channels, including caves, generally form at or near the water table, but some dissolution takes place as deep as 100 feet below the top of the zone of saturation. The orientation of the solution openings is parallel to that of the joints and fractures in the carbonate rocks. Secondary openings, such as joints in noncarbonate rocks, also have preferred orientations. As a result, wells completed in fractures or solution openings and wells completed in the intervening bedrock can have dissimilar heads and specific capacities, and the pumping of one well will have little effect on water levels in the other.

Although springs issue from some of the aquifers in all the physiographic provinces in Segment 11, large springs are most characteristic of the Valley and Ridge Province. Spring-flow is particularly large for springs that issue from the carbonate rocks. Three types of springs are common, and all result from ground-water movement driven by the force of gravity. Contact springs (fig. 84, center) form where water-saturated permeable material overlies less-permeable material. The water comes to the land surface at the contact of the two types of material, and the springs might issue where the contact intersects a sloping land surface. Contact springs are common in the Valley and Ridge Province but generally discharge only small volumes of water. Impermeable-rock springs (fig. 84, right) are fed by fractures, joints, or bedding planes in rocks that have low intergranular permeability. Small springs of this type that issue where a vertical joint intersects a bedding plane and that generally discharge only small volumes of water are typical of parts of the Appalachian Plateaus Province, but are also in the Valley and Ridge. Tubular springs (fig. 84, left) issue from solution channels in carbonate rocks. The largest magnitude springs are of this type because the catchment basins of networks of solution openings are likely to be more extensive than those of intersecting fractures, and the large solution openings in the carbonate rocks are able to transmit large quantities of water. For example, in Pennsylvania, 90 percent of the springs that discharge 100 gallons per minute or more issue from Ordovician and Cambrian limestones and dolomites; most of those that discharge more than 2,000 gallons per minute issue from limestone.

Water in the aquifers from which the springs issue can be either confined or unconfined. Springs that issue from aquifers that contain water under confined conditions are called artesian springs, whereas those that issue from unconfined aquifers are called gravity springs.

Spring location is related to geologic structure and topography. In the Valley and Ridge Province, many springs are located on or near anticlinal axes and around the noses of plunging anticlines. Open tension fractures tend to be concentrated in these places, and in the case of plunging anticlines, water-yielding beds may drain in the direction of plunge. Large springs are common where water gaps have been cut through anticlinal ridges because water-yielding geologic formations are commonly exposed at the lowest altitudes in these gaps. The bases of sandstone ridges are, in general, the sites of major springs. The largest springs tend to be in valleys, and some form the headwaters of streams.

Some of the springs in the Valley and Ridge Province discharge water that is distinctly warmer than the average air temperature. Most of the thermal springs in the Eastern United States are in the Valley and Ridge Province. The spring waters have become naturally heated by deep circulation of the water to levels where the rocks are substantially warmer than the average surface temperature of the Earth. This increase in temperature with depth is called the geothermal gradient. The normal geothermal gradient for the Eastern United States is sufficient to warm the circulating water appreciably. For water to reach the temperatures observed in thermal springs of Segment 11, circulation to minimum depths of from 800 to 5,200 feet is required. Conditions for a thermal spring require that the flow of ground water be concentrated, channeled to depths sufficient to heat the water, and then channeled back to the land surface. Folding, faulting, and fracturing of confined aquifers provide the necessary paths and barriers to channel the flow of the water (fig. 85). Water enters fractured rocks at topographically high recharge areas, and the cold water moves deeply enough to become heated and subsequently rise. Thermal springs commonly issue in valleys that have developed on or near the crest of anticlines, but generally a variety of geologic structures combine to form the deep flow system that results in the thermal springs.

Deeply circulating waters might have a long residence time in the aquifer, and as the water is heated, it can become exposed to emanations of gases and vapors from deeper in the Earth. This exposure and the heat of the water facilitates the dissolution of minerals from the surrounding rock by the ground water. Generally, the water in thermal springs that discharge from limestone is mineralized and commonly contains hydrogen sulfide. The water from thermal springs that discharge from the Oriskany Sandstone is reported to contain more dissolved minerals than water from cold springs that issue from the same formation. Waters from many thermal springs have been thought to have medicinal properties because of the mineralization.

RELATION OF GEOLOGY AND WELL YIELD

Several geologic factors influence well yields in the Valley and Ridge Province. Some geologic structural factors affect the yield of wells completed in carbonate and noncar-bonate aquifers. Wells located along fracture traces in any type of rock usually yield much more water than wells that do not penetrate fractures. Fold hinges represent areas where fractures are more abundant and rock cleavage can be well developed, which enhances secondary permeability. Also, the dip of strata in the area of a fold hinge tends to be less, a factor associated with higher well yields. Wells completed in beds that dip at angles of less than 15 degrees generally yield more water than those completed in beds that are inclined more steeply because more bedding-plane partings are penetrated by a well of a given depth in the nearly horizontal strata than one of the same depth in steeply dipping beds. Wells located on anticlines yield more water than those on synclines because the fractures on anticlines are tensional and, thus, more apt to be open than the compressional fractures on synclines. Thin-bedded rocks generally have more closely spaced fractures than thick-bedded rocks and, therefore, are likely to have higher fracture permeability and to yield more water.

Topographic location affects well yield; wells in valley bottoms generally are more productive than those on ridges or uplands because fracture zones in noncarbonate rocks and solution channels in carbonate rocks tend to be concentrated in valleys. Regolith is generally thicker in valleys and, thus, stores more water for gradual release to the underlying bedrock aquifers.

Noncarbonate rocks interbedded with carbonate rocks are typically more permeable than noncarbonate rocks with no intervening carbonate strata. In noncarbonate rocks, friable sandstone probably is potentially the most productive aquifer. Shale, massive mudstone, and claystone are the least productive rock types.

Some factors influence well yields only in carbonate aquifers. Well yields are generally proportional to the thickness of the regolith that overlies a carbonate aquifer. The regolith acts as a sponge and stores water for gradual release to solution openings in the underlying carbonate rock. The continual release of this water contributes to the continued dissolution of the carbonate rock and expansion and enlargement of the solution openings. Well yield varies with carbonate rock type; the best- to worst-yielding carbonate lithologies are, in order, sandy dolomite, coarse-grained dolomite, limestone, and fine-grained dolomite.

GROUND-WATER QUALITY

The chemical quality of water in the aquifers of the Valley and Ridge Province is somewhat variable but is generally suitable for municipal supplies and other purposes. Most of the water in the upper parts of the aquifers is not greatly mineralized and is suitable for drinking and most other uses. However, the deep parts of the aquifers contain saline water in many places and brackish water has been reported locally from zones as shallow as 90 feet below the land surface in valleys near the West Branch of the Susquehanna River in Pennsylvania. The large dissolved-solids concentrations in the saline and brackish water might result from the dissolution of halite (rock salt) at greater depths by deeply-circulating water. Abandoned or improperly plugged boreholes drilled for oil and gas exploration provide paths for upward movement of mineralized water in some areas.

The carbonate-rock aquifers consist mainly of calcium and magnesium carbonate, which are readily dissolved and thus affect the chemical composition of ground water. Waters from these aquifers have dissolved-solids concentrations that average about 330 milligrams per liter and hardness that averages about 280 milligrams per liter, which is considered to be very hard. The median hydrogen ion concentration, which is measured in pH units, is 7.4 (slightly basic); dissolution of calcium and magnesium carbonate minerals raises the pH of the water and increases the hardness. The median iron concentration is 0.1 milligram per liter, which is considered to be low, but concentrations as large as 8 milligrams per liter have been reported. Water in the carbonate-rock aquifers is mostly a calcium plus magnesium bicarbonate type (fig. 86A).

The undifferentiated sedimentary-rock aquifers consist principally of fractured sandstone but locally include fractured shale. The minerals that compose these rocks are chiefly silicates, which are much less soluble than those that compose the carbonate-rock aquifers. The water is mostly a calcium bicarbonate type (fig. 86B). Dissolved-solids concentrations are small and average only about 150 milligrams per liter. Hardness averages about 100 milligrams per liter, and the water is considered to be moderately hard. The median hydrogen ion concentration, which is measured in pH units, is 7.4. The median iron concentration is about 0.1 milligram per liter, but concentrations as large as 14 milligrams per liter have been reported. In some coal-mining areas, the ground water is mixed with acidic mine water, which can contain large concentrations of iron, manganese, sulfate, and dissolved solids.

FRESH GROUND-WATER WITHDRAWALS

Total freshwater withdrawals from consolidated-rock aquifers in the Valley and Ridge Province in Segment 11 were about 371 million gallons per day during 1985. With-drawals from carbonate-rock aquifers were estimated to be 249 million gallons per day (fig. 87). Slightly more than one-half of this water was used for domestic and commercial supplies. Withdrawals from undifferentiated sedimentary-rock aquifers, primarily sandstone aquifers, in the Valley and Ridge Province were estimated to be 122 million gallons per day. About two-thirds of this water was used for domestic and commercial supplies.

Appalachian Plateaus aquifers

INTRODUCTION

The Appalachian Plateaus Physiographic Province in Segment 11 extends over most of West Virginia, more than one-half of Pennsylvania, and small parts of westernmost Virginia and Maryland (fig. 88). The province is bounded on the east and southeast by the Valley and Ridge Province and by a narrow strip of the Central Lowland Province in Erie County, Pa. The Appalachian Plateaus Province extends into Segments 6, 10, and 12 of this Atlas but is most extensive in Segment 11. In most places, the eastern boundary of the Appalachian Plateaus is marked by an escarpment called the Cumberland Escarpment in Virginia and the Allegheny Front in West Virginia, Maryland, and Pennsylvania. A northward-facing erosional escarpment forms the boundary between the Appalachian Plateaus and the Central Lowland Provinces. The altitude of the Appalachian Plateaus Province is higher than that of the Valley and Ridge Province, as well as the Central Lowland Province.

Aquifers in consolidated sedimentary rocks in the Appalachian Plateaus Province are divided into the following categories‹Mississippian aquifers and Permian and Pennsylvanian aquifers (fig. 88). Most of the water-yielding rocks are sandstones (fig. 89), but carbonate rocks of Mississippian age locally yield water in parts of Virginia and West Virginia. Coal beds and seams yield water because they commonly are fractured along joint systems (cleat) that store and transmit water. Devonian siltstone, shale, and thin-bedded sandstone in Pennsylvania, Maryland, and West Virginia locally yield sufficient water for domestic and commercial supplies, especially where the rocks are fractured, but are not considered to be principal aquifers in this report. Unconsolidated glacial and alluvial deposits, discussed in the Surficial aquifer system section of this chapter, are productive aquifers in large areas in Pennsylvania and smaller areas in West Virginia.

The consolidated rocks of the Appalachian Plateaus Province are almost flat-lying to gently folded; the regional dip of the beds rarely exceeds 25 feet per mile. Elongate, gentle folds form alternating anticlines and synclines in Pennsylvania and West Virginia. These gentle warps are surface expressions of small displacements along deep-seated faults in many cases. Deformation of strata in the Appalachian Plateaus is extremely subtle compared to the folding in the Valley and Ridge Province. The Central Lowland Province is similar to the Appalachian Plateaus in the nearly flat-lying attitude of its rock layers and in the geologic formations present, but the formations of Pennsylvanian and Mississippian age have been eroded away in the Central Lowland.

HYDROGEOLOGIC UNITS

Consolidated sedimentary rocks that compose the Appalachian Plateaus aquifers in Segment 11 range in age from Devonian to Permian (fig. 89). Not all the geologic formations recognized in each of the States are shown

in the figure. Some formations are thin or are of local extent; as a result, they are not important in the hydrogeologic framework and are omitted. Most of the productive aquifers consist of sandstone or conglomerate, but limestone formations locally yield significant volumes of water. The water-yielding character of the geologic units shown as aquifers in figure 89 varies because the units change in lithology and thickness from place to place.

In southwestern Pennsylvania, the consolidated rocks nearest the surface are mostly Pennsylvanian in age. Pennsylvanian rocks are the principal coal-bearing formations and consist of cyclic sequences of sandstone, shale, conglomerate, clay, coal, and minor limestone. The sandstones are the most productive aquifers, although coal beds and limestones also yield water; the limestones, however, are thin compared to those of the Valley and Ridge Province. Rocks of Permian age cover most of Greene and Washington Counties in the southwestern corner of the State. Permian rocks are similar in lithology and water-yielding characteristics to the Pennsylvanian rocks, but were not deposited in cycles; they contain only thin coal beds and consist of more shale and less sandstone and conglomerate than the Pennsylvanian strata. Mississippian rocks consist mostly of shale, sandstone, and siltstone with minor conglomerate and limestone and are exposed north and east of the Pennsylvanian rocks where the beds of Pennsylvanian age have been removed by erosion. The principal water-yielding geologic units are sandstones of the Permian and Pennsylvanian Dunkard Group through the Mississippian and Devonian Pocono Formation (fig. 89). Reported typical yields of wells completed in all these units range from 30 to 300 gallons per minute, but some wells yield as much as 600 gallons per minute. Rocks of Devonian age are exposed north of the Mississippian strata in the Appalachian Plateaus Province and in the small part of the Central Lowlands Province in Segment 11. Devonian strata consist mostly of fine grained sandstone, siltstone, and shale, and are not considered to be principal aquifers, although these beds locally yield as much as 200 gallons per minute where they are fractured.

The Appalachian Plateaus Province in Maryland is only in Garrett County and the adjoining western one-third of Allegany County (fig. 88). Rocks of Pennsylvanian age cover most of the Plateaus area, but Mississippian and Devonian rocks are exposed along the crests of northeast-trending anticlines and in some of the deeper valleys. The Pennsylvanian and upper Mississippian geologic formations and their water-yielding characteristics are similar to those of Pennsylvania (fig. 89). Yields of wells completed in Pennsylvanian rocks range from 20 to 430 gallons per minute, but yields of wells completed in Mississippian strata only range from 20 to 180 gallons per minute. Devonian rocks in Maryland locally yield only small quantities of water.

The water-yielding geologic units of West Virginia are similar to those of Pennsylvania (fig. 89), except that the sandstones of the Mauch Chunk Group yield little water, and the Mississippian Greenbrier Limestone locally is a productive aquifer. The Greenbrier is exposed primarily in parts of Tucker, Randolph, Pocohontas, Greenbrier, and Monroe Counties in the southeastern part of the State. Yields of wells completed in Permian and Pennsylvanian sandstones range from 5 to 400 gallons per minute. Yields from the Greenbrier Limestone range from 5 to 100 gallons per minute to wells, but some springs that issue from the Greenbrier discharge 1,000 gallons per minute or more. Yields of wells completed in sandstone of the Pocono Group range from 5 to 120 gallons per minute, but the water in the deeper parts of the Pocono is highly mineralized.

The Appalachian Plateaus Province in Virginia covers Buchanan and Dickenson Counties and parts of four adjoining counties in the

southwestern corner of the State. The principal water-yielding geologic units are sandstones of the Harlan, the Wise, and the Lee Formations of Pennsylvanian age and the Mississippian Greenbrier Limestone (fig. 89). Water from these aquifers is used mainly for domestic supply because well yields are generally less than 12 gallons per minute from the Pennsylvanian aquifers and less than 50 gallons per minute from the Greenbrier Limestone. Many of the sandstone beds in the Pennsylvanian rocks are tightly cemented and are less permeable than the coal beds, which tend to be highly fractured and thus yield water. Some deep coal mines in this area are reported to be dry, which suggests that water-bearing fractures in all the rocks extend only a few hundred feet below land surface.

GROUND-WATER FLOW

Bedrock aquifers in the unglaciated part of the Appalachian Plateaus Province accept less recharge than those in the Valley and Ridge Province. This is because the unglaciated part of the Appalachian Plateaus is highly dissected, much of the area is sloping, and the slopes are covered with only thin accumulations of regolith. Accordingly, most of the precipitation that falls on the area runs rapidly off the slopes. However, a small part of the precipitation infiltrates the Earth¹s surface and moves downward through the unsaturated zone to infiltrate weathered bedrock and shallow fractures in unweathered bedrock. The general movement of the water is from areas of high head, usually at high altitude, toward areas of low head, usually in lowlying areas. The water generally moves vertically downward in areas of recharge, then horizontally in the aquifers, and finally upward in discharge areas as it follows paths of least resistance. The movement of the water is steplike because it moves vertically through fractures, then horizontally through sandstone or coal beds, and vertically again when it encounters other fractures. The water will follow permeable beds or a zone of fractures laterally for considerable distances. Saline water or brine is near the surface in much of the area because circulation of fresh ground water generally extends no more than a few hundred feet below the land surface. Most of the ground water moves through local or intermediate-scale flow systems; no regional flow occurs.

Circulation of ground water in the more dissected parts of the Appalachian Plateaus can be envisioned as the drainage of ³hydrologic islands² into bounding valleys underlain by older rocks; these ³islands² consist of younger rocks at higher altitudes. The edges of two such ³islands² with an intervening valley are shown in figure 90. Water moves down tributary valleys toward major rivers, partly as surface water through gaining streams and partly as ground water in alluvial or bedrock aquifers. Saline water or brine at shallow depths is virtually stagnant.

Springs commonly mark the intersection of the water table with a valley wall (fig. 90). Low-permeability rocks, such as shale or siltstone, or ironstone layers, retard the vertical movement of water. The water moves laterally in permeable strata atop the low-permeability rocks until it discharges as springflow. Most of the water that discharges from springs and much that discharges to surface streams is in the aquifers under unconfined conditions.

Water that leaks downward across shale or other low-permeability confining units is present under confined conditions. Water in wells that penetrate an artesian aquifer rises above the top of the aquifer and can flow at the land surface. Confined conditions frequently occur in the troughs of the gently warped synclines that characterize parts of the Appalachian Plateaus (fig. 91). The figure shows an aquifer that is overlain and

underlain by less-permeable material with recharge areas at a higher altitude than the central, down-folded part of the aquifer; thus, the water is under pressure. The potentiometric surface, which represents this pressure, is defined as the height to which water will rise in tightly cased wells that penetrate the aquifer. The potentiometric surface is drawn down around a flowing well or a well that is being pumped because of the release of part of the pressure.

Fresh ground water generally circulates only to shallow depths in the Appalachian Plateaus Province. In much of the area, saline water or brine is not far below the land surface with only a thin transition zone between the freshwater and saltwater. In the Pittsburgh, Pa., area, wells drilled deeper than 100 feet below the level of the nearest major stream might yield saline water. The discovery of saltwater springs in the 18th century led to a flourishing salt industry in West Virginia. The origin of the brine that feeds the springs is uncertain, but one possible explanation is that salt has been leached from deposits of rock salt and other evaporites. Such deposits are in the Upper Silurian Salina Group, which underlies much of western Pennsylvania, and in the Wills Creek Shale of Maryland, West Virginia, and Virginia. The brine might move upward along deep-seated fractures.

The presence of brine in the Appalachian Plateaus Province compared to its near-absence in the Valley and Ridge Province also might be attributed to the following factors that determine the relative effectiveness of flushing of the brine by freshwater:

€ In the Appalachian Plateaus, extensive, almost flat-lying confining units of shale, siltstone, clay, and dense limestone effectively impede the vertical movement of water. This is especially true of the Pennsylvanian rocks, which cover a large part of the area.

€ The aquifers and confining units are not as intensely fractured in the Appalachian Plateaus as in the Valley and Ridge. The fractures also decrease in number with depth, and the circulation of water likewise decreases with depth.

€ Most of the Appalachian Plateaus lacks the thick, solution-riddled carbonate-rock aquifers of the Valley and Ridge; such aquifers are conduits for the vigorous circulation of water.

The rocks of the Appalachian Plateaus are only mildly deformed compared to those of the Valley and Ridge. The lower part of the geologic section is, therefore, not brought near the land surface by thrust faults or overturned folds and is unable to receive freshwater as recharge or to readily discharge entrapped fluids, such as brine.

In the Central Lowland Province, very saline water is at shallow depths in the consolidated rocks below the glacial drift. The bedrock is generally low-permeability Devonian shale and is an extension of deeply buried formations that contain saline water in the Appalachian Plateaus Province. The younger, more permeable bedrock formations that contain most of the freshwater circulation system in the Appalachian Plateaus Province have been eroded away in the Central Lowland Province.

FACTORS THAT AFFECT GROUND-WATER FLOW

Underground mining of coal disturbs the natural ground-water flow system when the mines are active because artificial drains are constructed to dispose of unwanted water and mining activities can create new fractures and thus increase permeability. The regional water table can be lowered when the drains are effective, and ground-water flow directions can be changed in some cases until flow moves across former ground-water divides into adjoining basins. Ground water tends to flow toward mines, which are

usually dewatered by pumping. Adverse effects of mine drainage on well yields are greatest where the mines are not much deeper than the bottoms of the wells and where vertical fractures connect the aquifers and the mines. Abandoned mines can collapse, which causes fracturing of the rocks that overlie the mine and might be accompanied by an appreciable depression on the land surface. These conditions are likely to enhance recharge to the ground-water system and to reduce surface runoff and evapotranspiration.

Uncased boreholes that penetrate several aquifers, which might have different heads, provide artificial interconnections, or ³short circuits,² between the aquifers. The water that enters the borehole from aquifers with higher heads moves up the borehole and then laterally into aquifers with lower heads so that the composite head in the well is different than that in each of the aquifers. Flow within the borehole will continue, even when the well is not being pumped, until the head in the two aquifers becomes equal. The freshwater flow system of an area can be significantly altered where numerous uncased wells exist and may result in a change in the potentiometric surface.

Although bedrock formations in the Appalachian Plateaus Province can be traced over many miles, the distribution of lo-cal aquifers within these formations depends, in most cases, on the distribution of fracture permeability. Erosion is one factor that controls the distribution of fractures. Local aquifers, in some cases, are in valleys (fig. 92). Near-vertical tensile fractures and horizontal fractures are associated with slumping that takes place along valley walls, and recharge tends to be concentrated by the fractures. Under the valley floors, the most significant fractures are parallel to bedding, or nearly horizontal. Relief of compressional stress results when the weight of the rock that overlies a valley is reduced, because part of the rock is removed by erosion. This causes the remaining rock to separate along bedding planes and also results in the formation of vertical fractures. Fractures that underlie the valley are interconnected with those along the valley walls, and the interconnected fracture set enhances the permeability of the rock. Away from the valley walls, fractures are scarce and less likely to be interconnected; accordingly, wells in these areas will tend to have lower yields than those in the valleys. Furthermore, water in the shallow fractures on hilltops tends to drain in dry seasons, and yields of some wells might accordingly decline. In general, well yields are directly proportional to the number of interconnected fractures.

GROUND-WATER QUALITY

The chemical quality of water in the freshwater parts of the bedrock aquifers of the Appalachian Plateaus Province is somewhat variable but generally is satisfactory for municipal supplies and other purposes. Most of the water in the upper parts of the aquifers is not greatly mineralized and is suitable, or can be treated and made suitable, for most uses. Saline water commonly is in the aquifers at depths of only a few hundred feet below the land surface.

The undifferentiated sedimentary-rock aquifers consist principally of sandstone and fractured shale and coal. Most of the minerals that compose these aquifers do not readily dissolve, and the water is a calcium sodium bicarbonate type (fig. 93A). Dissolved-solids concentrations are small and aver-age only about 230 milligrams per liter. Hardness averages about 95 milligrams per liter, which is considered to be moder-ately hard. Water from predominately shale aquifers in Pennsylvania is reported to be hard, whereas that from predominately sandstone aquifers is reported to be soft. The median hydrogen ion concentration, which is measured in pH units, is

7.3. The median iron concentration is about 0.1 milligram per liter, but concentrations as large as 38 milligrams per liter have been reported. Carbonate-rock aquifers consist mostly of calcium and magnesium carbonate minerals, which are readily soluble and affect the chemical composition of the ground water. Limited data show that dissolved-solids concentrations in water from carbonate-rock aquifers in the Appalachian Plateaus Province average about 180 milligrams per liter, and hardness averages about 170 milligrams per liter, which is considered to be hard. The median hydrogen ion concentration, which is measured in pH units, is 7.5 (slightly basic). The median iron concentration is near zero. Water in these aquifers is mostly a calcium bicarbonate type (fig. 93B).

Contamination of ground water by the improper construction or plugging of oil and gas wells is a common problem in the Appalachian Plateaus Province. The area is the cradle of the oil industry in the United States; drilling for oil began in the 1860¹s, and drilling for brine began even earlier. Natural brines are associated with accumulations of oil and gas and are at shallow depths in many places. Wells that penetrate aquifers that contain brine, if not properly cased and cemented, can provide conduits for the brine to enter shallower freshwater aquifers. It was once a common practice for brine produced with oil and gas to be discharged into open pits from which it seeped downward to contaminate fresh ground-water bodies. Such practices are generally prohibited now, but effects of the past remain.

In coal-mining areas, which in the Appalachian Plateaus Province are generally within the limits of Pennsylvanian rocks (fig. 88), ground water commonly includes water that has been in contact with mine workings or that has infiltrated and leached mine spoil piles (fig. 94). Water affected by coal-mining operations is usually acidic. Sulfur-bearing minerals, such as pyrite, that are present in the coal are exposed to air in mines and spoil piles, and the oxidized sulfur combines with water to form sulfuric acid. The acid water commonly contains large concentrations of iron, manganese, sulfate, and dissolved solids and is highly colored (fig. 95). An exception is in the southern coal fields of West Virginia where the coal is low in sulfur, mine drainage tends to be alkaline, and water from working or abandoned mines is commonly used for public supply.

FRESH GROUND-WATER WITHDRAWALS

Total freshwater withdrawals from consolidated sedimentary-rock aquifers in the Appalachian Plateaus and the Central Lowland Provinces were estimated to be 282 million gallons per day during 1985. About 47 percent of this amount, or about 133 million gallons per day, was withdrawn for domestic and commercial supplies (fig. 96). About 116 million gallons per day, or about 41 percent of the total withdrawals, was pumped for industrial, mining, and thermoelectric power purposes; most of this water was used in coal mining operations.

Navigation notes:

For easiest navigation, extensive use of “bookmarks” has been made. To view a given Section, simply click on the desired Section heading. A “+” sign indicates collapsed subheadings can be found by clicking on the “+”. To re-collapse the heading, click on the “–” sign. Use the *Page Up* and *Page Down* keys to move to adjacent pages. You can also navigate by single-clicking the arrow buttons on the toolbar at the top of the Acrobat Reader window (see the diagrams below for an explanation).

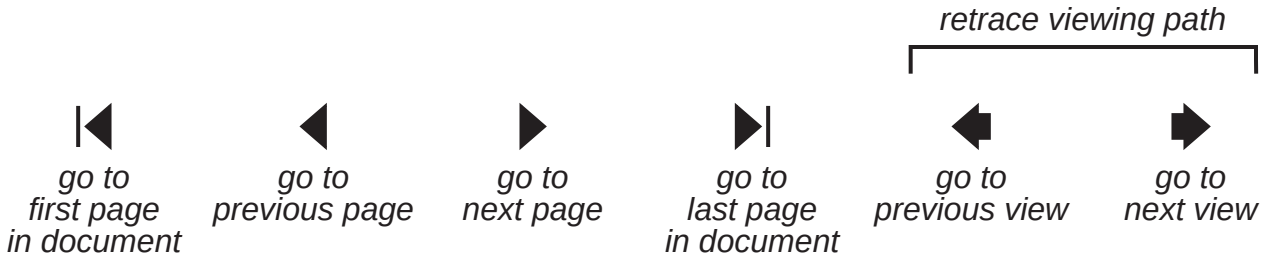

Range Cleanup - PA099, 99th RSC

Wilkes-Barre
U.S. Army Reserve Center

Wilkes-Barre, Pennsylvania

Project Report

Prepared for

U.S. Army Corps of Engineers
Louisville District
Environmental Engineering Branch
Contract No. DACA27-99-D-0021 • Delivery Order No. 14

Prepared by

IT CORPORATION
312 Directors Drive
Knoxville, Tennessee 37923-4799

July 2003

INTERNATIONAL TECHNOLOGY CORPORATION

PROJECT REPORT

RANGE CLEANUP – PA099, 99th RSC
WILKES-BARRE U.S. ARMY RESERVE CENTER
WILKES-BARRE, PENNSYLVANIA

Contract No. DACA 27-99-D-0021
Delivery Order No. 0014

Submitted to:

U.S. Army Corps of Engineers
Louisville District
Environmental Engineering Branch

Prepared by:

IT Corporation
312 Directors Drive
Knoxville, Tennessee 37923-4799

July 2003

Table of Contents

Table of Contents i
List of Tables ii
List of Figures ii
List of Appendices ii

1.0 Introduction 1-1
1.1 Property/Project Identifiers 1-1
1.2 Site Description 1-1
1.2.1 Inspection Information 1-1
1.2.2 Range Characteristics 1-2
1.3 Scope of Work 1-3

2.0 Project Team 2-1

3.0 Project Activities 3-1

4.0 Conclusions 4-1

List of Tables

3-1 Lead Wipe Clearance Sample Results ..... follows text

List of Figures

1-1 Site Location Map ..... follows table
3-1 Clearance Wipe Sample Locations ..... follows table

List of Appendices

Appendix A Photographs
Appendix B Clearance Samples Sampling Forms and Analytical Results, IT Corporation and EnviroData Group, August 2002
Appendix C Clearance Certification Letter

1.0 Introduction

This document presents the report for project activities at the 99th RSC facility located at 1001 Highway 315 South, Wilkes-Barre, Pennsylvania (Figure 1-1). The project activities were based on the Scope of Work (SOW) provided by the U.S. Army Corps of Engineers (USACE) Louisville District (CELRL) and a site inspection conducted on April 17, 2002.

1.1 Property/Project Identifiers

- Facility ID Number: PA099
- State: Pennsylvania
- Facility Name: Wilkes-Barre U.S. Army Reserve Center
- City: Wilkes-Barre.

1.2 Site Description

1.2.1 Inspection Information

Ms. Ginger Darnell of IT Corporation inspected the range on April 17, 2002. A follow-up inspection (to collect wipe samples) was conducted by Mr. Frank Kelly of IT Corporation on August 16, 2002. The former range was located on the second floor of the facility. The range had been previously cleaned and all range components – including the firing line, shooter partitions, target retrieval system, bullet trap, and deflector plates – had been removed. No sand or lead shot was observed during the inspection. The former range was now used for storage and being converted into office space.

The concrete block walls were painted and the sound deadening material in the firing line area had been covered with drywall and painted. The ceiling was covered with a new, acoustical tile drop ceiling. The range floor was constructed of concrete and had been clean and sealed. The floor in the bullet trap area was plywood, possibly covering a former sand trap. Windows were installed along the outside wall and at least one partition wall was constructed to divide the range. Desks, tables, chairs, office equipment, shelves, filing cabinets, and wall lockers, now occupied the former range. A closet was located through a doorway behind the former firing line. Two rows of fluorescent lights also ran along the entire length of the range.

1.2.2 Range Characteristics

1.2.2.1 Number of Firing Points

Unknown – the firing line and target retrieval systems had been removed. Based on the width of the room, it was assumed to have been a 5-point range.

1.2.2.2 Bullet Trap Characteristics

Unknown – the bullet trap had been removed. Based on the plywood floor construction, it was assumed to have been a former sand trap with a false floor.

1.2.2.3 Range Summary

The range, which was located on the second floor, was constructed of the following:

- Floor – concrete, clean and sealed, with a painted plywood floor in the former bullet trap area
- Walls – painted drywall covering soundboard (firing line area); painted wooden planks covering top portion of the front wall (bullet trap area), and painted concrete block throughout the remainder of range
- Ceiling – acoustical tile drop ceiling.

Other features included desks, tables, chairs, office equipment, shelves, filing cabinets, and wall lockers. A drywall partition was being constructed to divide the former range and convert the space into offices.

1.2.2.4 Suspect Asbestos Containing Materials (ACM) Inventory

No suspect ACM was known to be present.

1.2.2.5 Air Handling Systems Description

The inlet vent was either removed or covered by the new drywall and could not be located. The exhaust vent was also not identified; however, there was a section of horizontal wooden planks, spanning the top front wall of the former bullet trap that possibly covered the exhaust vent.

1.3 Scope of Work

The SOW consisted of the following:

- Collecting wipe samples
- Cleaning/removing stored items, if necessary
- Cleaning the range, if necessary
- Cleaning and removing the air handling system, if necessary
- Collecting clearance samples, if necessary
- Scabbling and sealing the floor, if necessary, based on clearance data.

As stated in Section 1.2.1, the range had previously been cleaned and converted to storage and office space. Therefore, wipe samples were first collected to evaluate if the range met the project clearance requirements, per the request of the 99th RSC. If the range met the project clearance requirements, a clean-up action would not be necessary.

The U.S. Army Reserve Command (USARC) recognized safety and health hazards from lead-dust in indoor rifle ranges; however, regulations supporting cleanup remedies dealt primarily with non-industrial standards. After reviewing information relative to cleaning methods and clearance sampling, the value of 200 µg/sf was derived as a value that would release the indoor ranges as a room that could be reoccupied as a non-lead work area. This value has also been selected by other federal agencies as acceptable.

2.0 Project Team

The project team involved with the cleanup activities included the following organizations and their representatives:

- Project Initiator – USARC
  Ken Coulter – Facility Support Branch, U.S. Army Reserve Engineer

- Client – 99th RSC

- Construction Manager – USACE, Louisville District
  Project Manager – Mark Ringenberg
  Contracting Officer's Representative – David Dierken

- Contractor – IT Corporation
  Project Manager – Bill Scoville
  Site Supervisor – Frank Kelly
  Site Safety Officer/Construction Quality Control Engineer – Frank Kelly

- Subcontractors
  Range Clearance Inspection and Sampling – IT Corporation, Knoxville, Tennessee
  Clearance Wipe Sample Analysis – EnviroData Group, Lexington, Kentucky.

3.0 Project Activities

This section details the project activities performed at the 99th RSC facility located at 1001 Highway 315 South, Wilkes-Barre, Pennsylvania. Photographs of the former range area are included in Appendix A.

Because the range had previously been cleaned and converted to storage and office space, the project activities consisted of collecting clearance samples from horizontal surfaces to determine total lead content in the settled dust. Clearance dust sampling consisted of collecting single-surface dust wipe samples and analyzing them for lead content to determine whether lead concentrations exceeded the clearance criteria of 200 µg/sf. A total of 25 dust wipe samples were collected by Mr. Frank Kelly, IT Corporation, on August 16, 2002, from the following locations shown on Figure 3-1:

- Twenty-three dust wipe samples from:
  - Front wall, left, top (001DT)
  - Front wall, middle, middle (002DT)
  - Front wall, right, bottom (003DT)
  - Right wall, left, top (004DT)
  - Right wall, middle, middle (005DT)
  - Right wall, right, bottom (006DT)
  - Back wall, left, top (007DT)
  - Back wall, middle, middle (008DT)
  - Back wall, right, bottom (009DT)
  - Left wall, left, top (010DT)
  - Left wall, middle, middle (011DT)
  - Left wall, right, bottom (012DT)
  - Floor – firing line, left (013DT)
  - Floor – firing line, right (014DT)
  - Floor – mid-range, middle (015DT)
  - Floor – bullet catch, left (016DT)
  - Floor – bullet catch, right (017DT)
  - Floor – bullet trap, middle (018DT)
  - Ceiling – bullet catch, middle (019DT)
  - Ceiling – mid-range, middle (020DT)
  - Ceiling – firing line, middle (021DT)
  - Floor – outside range door (022DT)
  - Floor – outside range door (023DT)

- One blank sample (024DT)

- One spike sample (025DT).

Sampling procedures were conducted in accordance with procedures outlined in the project Work Plan. Specifically, lead-in-dust wipe samples were secured over a 1-sf area following an "S" pattern from side-to-side, folded in half, and wiped over the same area at a 90° angle to the first "S" pattern (top-to-bottom). Latex gloves were changed between sampling episodes. Samples were then returned to the vials, sealed, and labeled for transport to the laboratory. All lead-in-dust wipe samples were acid digested and analyzed by EnviroData Group, Lexington, Kentucky, in accordance with U.S. Environmental Protection Agency (USEPA) Methods SW-846 3050B and 6010B.

The field blank was prepared by removing and replacing the cap of the vial in the sampling area. The spike sample was prepared in the laboratory by treating sampling media with a known quantity of lead dust.

Results of the wipe sample analyses are summarized in Table 3-1 and are detailed in the laboratory analytical report provided in Appendix B. The analytical results in Table 3-1 may be summarized as follows:

- All samples were less than the clearance criterion of 200 µg/sf.
- The highest concentration (016DT, floor – bullet catch, left) was 10 µg/sf.

Thus, based on these results, the clearance criterion of 200 µg/sf has been attained.

Via a letter dated December 27, 2002, the facility was notified that the clearance levels were attained and that the range could be reoccupied. A copy of the clearance certification letter is provided in Appendix C.

4.0 Conclusions

All of the range structures associated with the indoor range at the Wilkes-Barre U.S. Army Reserve Center, Wilkes-Barre, Pennsylvania, were previously removed. The range had been cleaned, painted, and converted into storage and office space. Clearance wipe samples collected by IT Corporation document that residual lead levels in the range concrete are below the clearance level of 200 µg/sf. Based on a review of the clearance wipe sample data, IT concludes that no further range cleanup is necessary for the Wilkes-Barre U.S. Army Reserve Center and the range is approved for reoccupancy. Range clearance procedures consisted of the following:

- Clearance sampling consisting of collecting wipe samples from floor, wall, and ceiling surfaces and analyzing the samples for lead.

Although the range appears to have been extensively cleaned by others previously, small amounts of lead dust may be present in the range. The Occupational Safety and Health Administration (OSHA) Construction Industry Standard for Lead (29 CFR 1926.62) should be reviewed before any remodeling activities that may cause a release of dust on wall and floor surfaces are undertaken. The OSHA standard requires certain controls to reduce or maintain worker exposures less than the Permissible Exposure Limit (PEL) of 50 $\mu g/m^3$ of lead. The employer must protect the worker from lead.

TABLES

Table 3-1
Lead Wipe Clearance Sample Results (µg/sf)[1]
Wilkes-Barre U.S. Army Reserve Center, PA099
Wilkes-Barre, PA

Site/Date Code	**99PASCR02AUG16**		
Sampler	**IT CORPORATION**		
Location	**Sample ID**	**Result2**	**Comments**
Front wall, left, top	001DT	**1.97**	
Front wall, middle, middle	002DT	**2.91**	
Front wall, right, bottom	003DT	**1.36**	
Right wall, left, top	004DT	**<2.5**	
Right wall, middle, middle	005DT	**<2.5**	
Right wall, right, bottom	006DT	**0.845**	
Back wall, left, top	007DT	**<2.5**	
Back wall, middle, middle	008DT	**<2.5**	
Back wall, right, bottom	009DT	**3.21**	
Left wall, left, top	010DT	**<2.5**	
Left wall, middle, middle	011DT	**<2.5**	
Left wall, right, bottom	012DT	**1.12**	
Floor - firing line, left	013DT	**2.26**	
Floor - firing line, right	014DT	**3.43**	
Floor - mid-range, middle	015DT	**7.12**	
Floor - bullet catch, left	016DT	**10**	
Floor - bullet catch, right	017DT	**4.22**	
Floor - bullet trap, middle	018DT	**6.23**	
Ceiling - bullet catch, middle	019DT	**<2.5**	
Ceiling - mid-range, middle	020DT	**<2.5**	
Ceiling - firing line, middle	021DT	**<2.5**	
Floor - outside range door	022DT	**1.49**	
Floor - outside range door	023DT	**2.81**	
Blank	024DT	<2.5	
Spike	025DT	159	199 µg spike

(1) = Results expressed in micrograms per square foot (µg/sf) of surface area, except Field Blank and Spike Sample, which are µg/wipe.

(2) = Results (other than blanks or spikes) in **bold** type are below the clearance level of 200 µg/sf .

FIGURES

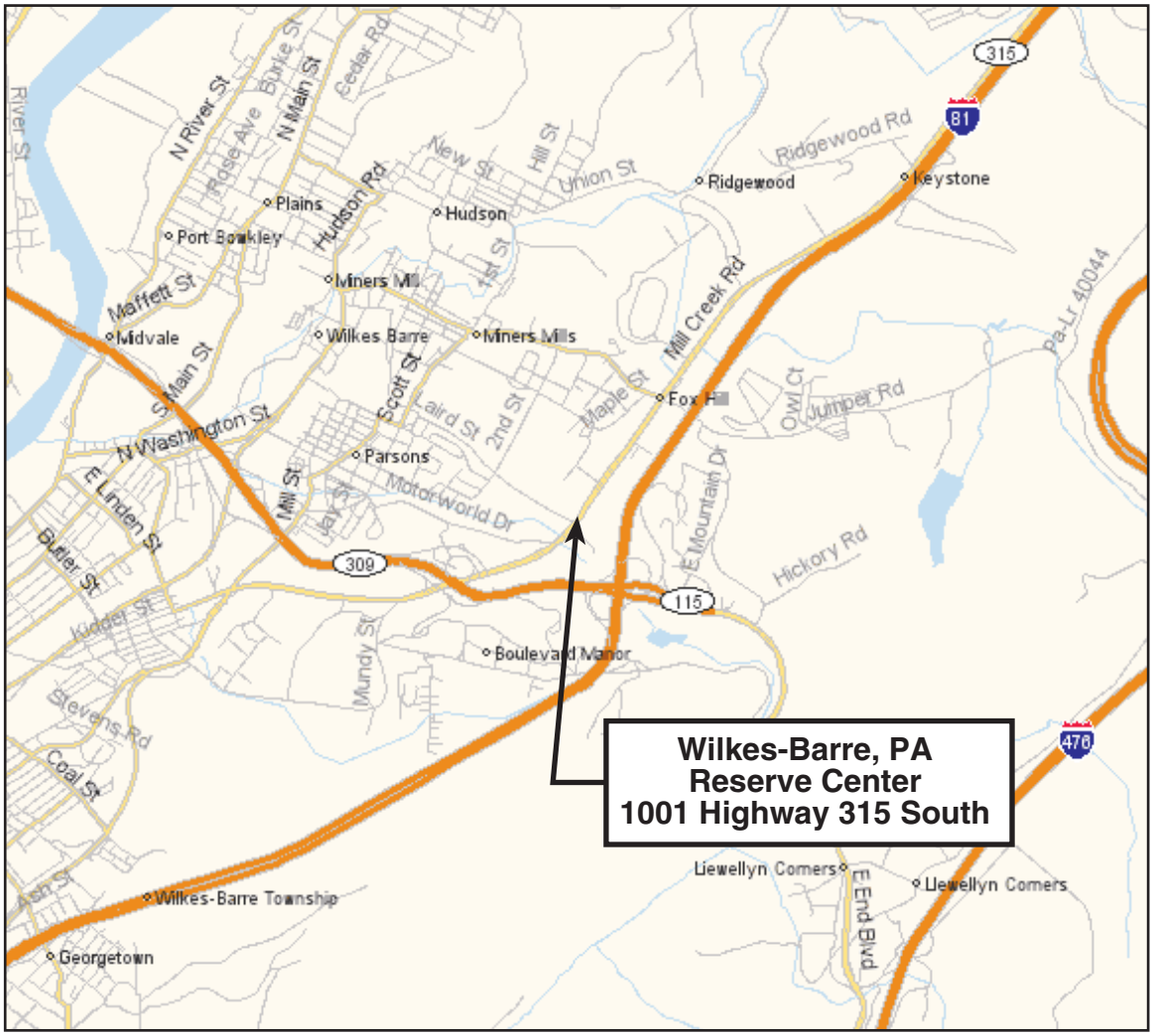

Source Map: MapQuest.com, Inc.

Pennsylvania

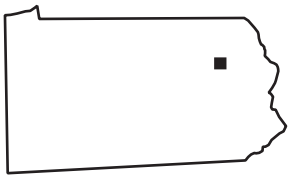

QUADRANGLE LOCATION

N

Scale - Miles

0 .5 1

IT CORPORATION

Figure 1-1.
Site Location Map.
Wilkes-Barre, PA (PA099) Reserve Center.

DRAWING NO. K-807744-0301-4/03-w

CHECKED BY

APPROVED BY

KMS 4/1/03

DRAWING BY

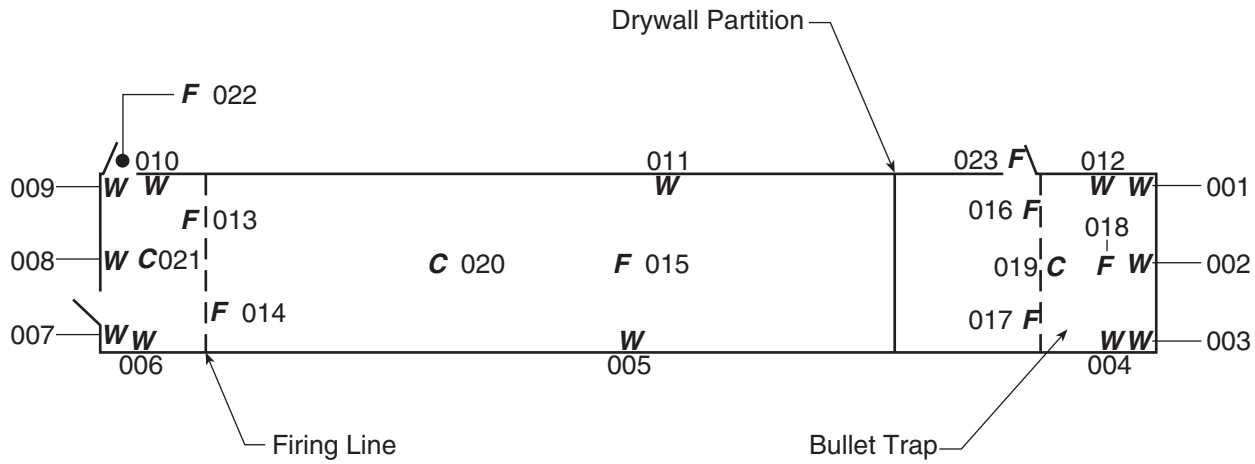

Legend

F/W/C	Sample Date 16 Aug 02

Scale - Feet

0 10 20

Notes: ***F*** (floor), ***W*** (wall) and ***C*** (ceiling) designate the location of the sample. Samples 024 and 025 were a blank and a spike, respectively.

IT CORPORATION

Figure 3-1.
Clearance Wipe Sample Locations.
Wilkes-Barre, PA (PA099) Reserve Center.

DRAWING BY	KMS	CHECKED BY			DRAWING NO.
	4/1/03	APPROVED BY			K-807744-0399-4/03-w

APPENDIX A
Photographs

Wilkes-Barre (PA099) Photo No. 1 –Overview of former range, cleaned, painted, and used for storage. View looking towards the firing line.

Wilkes-Barre (PA099) Photo No. 2 –Closer view looking towards the firing line. Preparing to install walls and convert space to offices.

Wilkes-Barre (PA099) Photo No. 3 –Overview of former range. View looking towards the bullet trap.

Wilkes-Barre (PA099) Photo No. 4 –Closer view of the bullet trap area. Note the new windows, drop ceiling, painted walls, and clean floor.

APPENDIX B
Clearance Samples Sampling Forms and Analytical Results, IT Corporation and EnviroData Group, August 2002

Figure 3-2
Dust Sampling Form

Installation WILKES-BARRE, PA Army POC John
Building Address or Location 1001 Highway 315 Wilkes-Barre, PA
Range Unit No. _____

Date Cleanup Completed — Time Cleanup Completed — Date and Time Sampling Initiated 8-16-02 / 1100

Clearance Categories:

1. Interior treatment without containment
2. Interior treatment with containment
3. Exterior work (including soil)
4. Routine Maintenance

Sample No.	Sample Location	Clearance Category No.	Sample Area Dimensions	Sample Area (ft^2)	Lab Results ($\mu g/ft^2$)	Pass or Fail
001	Front wall, left, top		1ft2	1		
002	Front wall, middle, middle		1ft2	1		
003	Front wall, right, bottom		1ft2	1		
004	Right wall, left, top		1ft2	1		
005	Right wall, middle, middle		1ft2	1		
006	Right wall, right, bottom		1ft2	1		
007	Back wall, left, top		1ft2	1		
008	Back wall, middle, middle		1ft2	1		
009	Back wall, right, bottom		1ft2	1		
010	Left wall, left, top		1ft2	1		
011	Left wall, middle, middle		1ft2	1		
012	Left wall, right bottom		1ft2	1		

Comments 001 - 99PAWILO2AUG16001DT 002 - 99PAWILO2AUG16002DT
003 - 99PAWILO2AUG16003DT 004 - 99PAWILO2AUG16004DT
005 - 99PAWILO2AUG16005DT 006 - 99PAWILO2AUG16006DT
007 - 99PAWILO2AUG16007DT 008 - 99PAWILO2AUG16008DT
009 - 99PAWILO2AUG16009DT 010 - 99PAWILO2AUG16010DT
011 - 99PAWILO2AUG16011DT 012 - 99PAWILO2AUG16012DT

Date of Sample Collection 8-16-02 Date Shipped to Lab 8-28-02
(Attach a Copy of the Chain of Custody to this Form)

Name of Lab and Phone No. Enviro Data Group 859-276-3506
Name of Clearance Examiner (print) FRANK D KELLY
License Number(s) _____
(EPA, State, or both, if applicable)
Signature: _____ Date 8-16-02

Dust Sampling Form
continuation page

Installation WILKES-BARRE, PA

Date and Time Sampling Initiated 8-16-02 / 1100

Sample No.	Sample Location	Clearance Category No.	Sample Area Dimensions	Sample Area (ft2)	Lab Results (ug/ft2)	Pass or Fail
013	Floor- firing line, left		1ft²	1		
014	Floor- firing line, right		1ft²	1		
015	Floor- mid-range, middle		1ft²	1		
016	Floor- bullet catch, left		1ft²	1		
017	Floor- bullet catch, right		1ft²	1		
018	Floor- bullet trap, middle		1ft²	1		
019	Ceiling- bulletcatch, middle		1ft²	1		
020	Ceiling- mid-range, middle		1ft²	1		
021	Ceiling- firing line, middle		1ft²	1		
022	Floor- outside range door		1ft²	1		
023	Floor- outside range door		1ft²	1		
024	BLANK		—	—		
025	SPIKE		—	—		

Comments 013 - 99PAWILO2AUG16013DT
014 - 99PAWILO2AUG16014DT
015 - 99PAWILO2AUG16015DT
016 - 99PAWILO2AUG16016DT
017 - 99PAWILO2AUG16017DT
018 - 99PAWILO2AUG16018DT
019 - 99PAWILO2AUG16019DT
020 - 99PAWILO2AUG16020DT
021 - 99PAWILO2AUG16021DT
022 - 99PAWILO2AUG16022DT
023 - 99PAWILO2AUG16023DT
024 - 99PAWILO2AUG16024DT

IT CORPORATION
A Member of The IT Group

WILKES-BARRE, PA

By FK Date 8-16-02 Subject _____ Sheet No. _____ of _____

Chkd. By _____ Date _____ Proj. No. _____

.25 in. X .25 in.

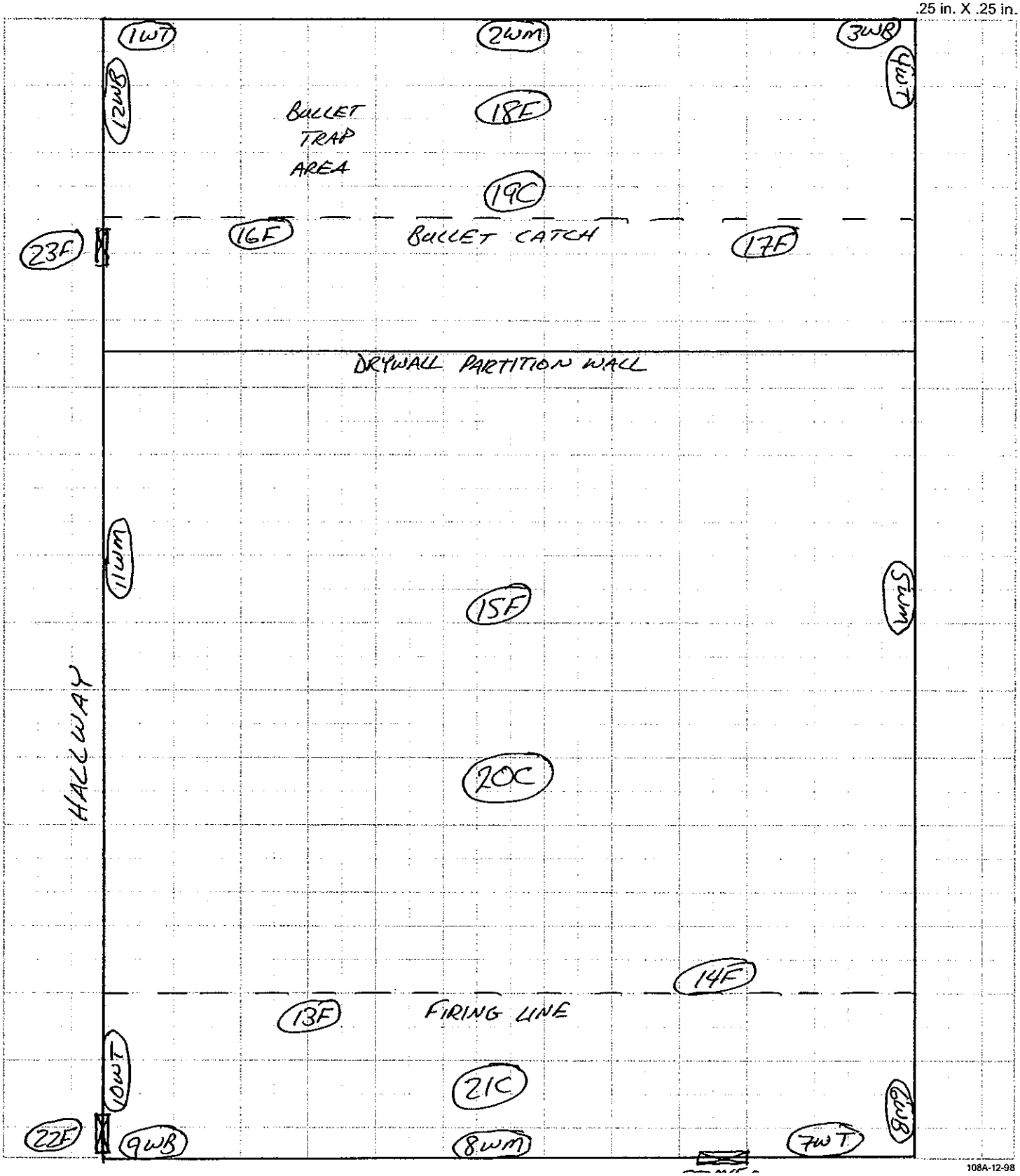

108A-12-98

EnviroData Group
Accredited Lab Data for Today's Environment

2520 Regency Road
Lexington, KY 40503-2921
Phone: 859-276-3506
Toll Free: 800-489-3506
Fax: 859-278-5665
Email: info@envirodatagroup.com
www.envirodatagroup.com

September 18, 2002

Mr. Bill Scoville
Shaw Environmental & Infrastructure
11499 Chester Road
Cincinnati, OH 45246

RE: Data Package and Narrative
Project: 838955
COC 15308

Dear Mr. Scoville:

Enclosed is the case narrative, which summarizes any issues encountered with the analyses for the samples referenced below.

General

Twenty-five (25) samples were received by EnviroData Group (EDG) on September 6, 2002. The samples were received at 25 °C and intact. The temperature of the samples was measured upon receipt and was noted on the Chain of Custody Form #15308.

The individual client sample name and laboratory sample name cross-reference list is provided, as follows:

EnviroData Group Lab Number	Client Sample ID
154080	99PAWIL02AUG16001DT
154081	99PAWIL02AUG16002DT
154082	99PAWIL02AUG16003DT
154083	99PAWIL02AUG16004DT
154084	99PAWIL02AUG16005DT
154085	99PAWIL02AUG16006DT
154086	99PAWIL02AUG16007DT
154087	99PAWIL02AUG16008DT
154088	99PAWIL02AUG16009DT
154089	99PAWIL02AUG16010DT
154090	99PAWIL02AUG16011DT
154091	99PAWIL02AUG16012DT
154092	99PAWIL02AUG16013DT

154093	99PAWIL02AUG16014DT
154094	99PAWIL02AUG16015DT
154095	99PAWIL02AUG16016DT
154096	99PAWIL02AUG16017DT
154097	99PAWIL02AUG16018DT
154098	99PAWIL02AUG16019DT
154099	99PAWIL02AUG16020DT
154100	99PAWIL02AUG16021DT
154101	99PAWIL02AUG16022DT
154102	99PAWIL02AUG16023DT
154103	99PAWIL02AUG16024DT
154104	99PAWIL02AUG16025DT

Metals- Lead

Samples 154080-154104 were analyzed for Total Lead by Method SW6010B on 09/15/2002.

Instrument Calibration: The calibration criteria were within the corresponding QC limits.

Initial Calibration Verification (ICV): The ICV was within the corresponding QC limits for all project analytes.

Initial Calibration Blanks (ICB): The ICB was below the corresponding reporting limits for all project analytes.

ICS A/ICS AB: The ICS A and AB at the beginning and end of the run were within acceptable limits.

Continuing Calibration Verification (CCV): All CCVs were within the corresponding QC limits for all project analytes.

Continuing Calibration Blanks (CCB): All CCBs were below the corresponding reporting limits for all project analytes.

Method Blank (MB): The MB sample result was below the corresponding reporting limit for all project analytes.

Laboratory Control Sample (LCS): The LCS percent recovery was within the corresponding QC limits for all project analytes.

Matrix Spike/Matrix Spike Duplicate (MS/MSD): The MS/MSD samples' percent recoveries and relative percent differences were within corresponding QC limits for all project analytes.

Post Digestion Spike (PDS): The Post Digestion Spikes were within the acceptance criteria for the target analyte.

If you have any questions regarding the enclosed information, please contact Lisa Sexton at (859) 276-3506 ext. 57.

Sincerely,
EnviroData Group

Lisa Sexton
Project Manager

Cc:
Dr. Maqsud Rahman
Shaw Environmental & Infrastructure
11499 Chester Road
Cincinnati, OH 45246

EnviroData Group
Accredited Lab Data for Today's Environment

2520 Regency Rd
Lexington, KY 40503
Phone: 859-276-3506
Toll Free: 800-489-3506
Fax: 859-278-5665
E-mail: info@envirodatagroup.com

Analytical Results

Shaw Environmental & Infrastructure, Inc.
Attn: Bill Scoville
11499 Chester Road
Cincinnati, OH 45246

Project Name: Wilkes-Barre, PA
Project Number: 838955
Chain of Custody: 15308

cc:

Date Received: 09/06/2002 Collector: Client Temperature Received: 25
Project Manager: Lisa Sexton

	Result	Units	Client Limit	RL	Qualifiers	Analyzed/Analyst	Extracted
Laboratory Sample #: 154080 Client Sample ID: 99PAWIL02AUG16001DT Sampled: 08/16/2002 11:00							
Client Sample #:							
ICP TOTAL		**Method: SW6010B**				**Prep. Method: SW 3050B**	
Total Lead	**1.97**	ug/Wipe	N/A	2.50		09/15/2002 / CRF	09/11/2002
Laboratory Sample #: 154081 Client Sample ID: 99PAWIL02AUG16002DT Sampled: 08/16/2002 11:00							
Client Sample #:							
ICP TOTAL		**Method: SW6010B**				**Prep. Method: SW 3050B**	
Total Lead	**2.91**	ug/Wipe	N/A	2.50		09/15/2002 / CRF	09/11/2002
Laboratory Sample #: 154082 Client Sample ID: 99PAWIL02AUG16003DT Sampled: 08/16/2002 11:00							
Client Sample #:							
ICP TOTAL		**Method: SW6010B**				**Prep. Method: SW 3050B**	
Total Lead	**1.36**	ug/Wipe	N/A	2.50		09/15/2002 / CRF	09/11/2002
Laboratory Sample #: 154083 Client Sample ID: 99PAWIL02AUG16004DT Sampled: 08/16/2002 11:00							
Client Sample #:							
ICP TOTAL		**Method: SW6010B**				**Prep. Method: SW 3050B**	
Total Lead	**< 2.50**	ug/Wipe	N/A	2.50		09/15/2002 / CRF	09/11/2002
Laboratory Sample #: 154084 Client Sample ID: 99PAWIL02AUG16005DT Sampled: 08/16/2002 11:00							
Client Sample #:							
ICP TOTAL		**Method: SW6010B**				**Prep. Method: SW 3050B**	
Total Lead	**< 2.50**	ug/Wipe	N/A	2.50		09/15/2002 / CRF	09/11/2002
Laboratory Sample #: 154085 Client Sample ID: 99PAWIL02AUG16006DT Sampled: 08/16/2002 11:00							
Client Sample #:							
ICP TOTAL		**Method: SW6010B**				**Prep. Method: SW 3050B**	
Total Lead	**0.845**	ug/Wipe	N/A	2.50		09/15/2002 / CRF	09/11/2002
Laboratory Sample #: 154086 Client Sample ID: 99PAWIL02AUG16007DT Sampled: 08/16/2002 11:00							
Client Sample #:							

EnviroData Group

Chain of Custody: 15308
Project Name: Wilkes-Barre, PA
Project Number: 838955

	Result	Units	Client Limit	RL	Qualifier	Analyzed/Analyst	Extracted
ICP TOTAL		**Method: SW6010B**				**Prep. Method: SW 3050B**	
Total Lead	**< 2.50**	ug/Wipe	N/A	2.50		09/15/2002 / CRF	09/11/2002

Laboratory Sample #: 154087 Client Sample ID: 99PAWIL02AUG16008DT Sampled: 08/16/2002 11:00
Client Sample #:

ICP TOTAL		**Method: SW6010B**				**Prep. Method: SW 3050B**	
Total Lead	**< 2.50**	ug/Wipe	N/A	2.50		09/15/2002 / CRF	09/11/2002

Laboratory Sample #: 154088 Client Sample ID: 99PAWIL02AUG16009DT Sampled: 08/16/2002 11:00
Client Sample #:

ICP TOTAL		**Method: SW6010B**				**Prep. Method: SW 3050B**	
Total Lead	**3.21**	ug/Wipe	N/A	2.50		09/15/2002 / CRF	09/11/2002

Laboratory Sample #: 154089 Client Sample ID: 99PAWIL02AUG16010DT Sampled: 08/16/2002 11:00
Client Sample #:

ICP TOTAL		**Method: SW6010B**				**Prep. Method: SW 3050B**	
Total Lead	**< 2.50**	ug/Wipe	N/A	2.50		09/15/2002 / CRF	09/11/2002

Laboratory Sample #: 154090 Client Sample ID: 99PAWIL02AUG16011DT Sampled: 08/16/2002 11:00
Client Sample #:

ICP TOTAL		**Method: SW6010B**				**Prep. Method: SW 3050B**	
Total Lead	**< 2.50**	ug/Wipe	N/A	2.50		09/15/2002 / CRF	09/11/2002

Laboratory Sample #: 154091 Client Sample ID: 99PAWIL02AUG16012DT Sampled: 08/16/2002 11:00
Client Sample #:

ICP TOTAL		**Method: SW6010B**				**Prep. Method: SW 3050B**	
Total Lead	**1.12**	ug/Wipe	N/A	2.50		09/15/2002 / CRF	09/11/2002

Laboratory Sample #: 154092 Client Sample ID: 99PAWIL02AUG16013DT Sampled: 08/16/2002 11:00
Client Sample #:

ICP TOTAL		**Method: SW6010B**				**Prep. Method: SW 3050B**	
Total Lead	**2.26**	ug/Wipe	N/A	2.50		09/15/2002 / CRF	09/11/2002

Laboratory Sample #: 154093 Client Sample ID: 99PAWIL02AUG16014DT Sampled: 08/16/2002 11:00
Client Sample #:

ICP TOTAL		**Method: SW6010B**				**Prep. Method: SW 3050B**	
Total Lead	**3.43**	ug/Wipe	N/A	2.50		09/15/2002 / CRF	09/11/2002

Laboratory Sample #: 154094 Client Sample ID: 99PAWIL02AUG16015DT Sampled: 08/16/2002 11:00
Client Sample #:

ICP TOTAL		**Method: SW6010B**				**Prep. Method: SW 3050B**	
Total Lead	**7.12**	ug/Wipe	N/A	2.50		09/15/2002 / CRF	09/11/2002

Laboratory Sample #: 154095 Client Sample ID: 99PAWIL02AUG16016DT Sampled: 08/16/2002 11:00
Client Sample #:

ICP TOTAL		**Method: SW6010B**				**Prep. Method: SW 3050B**	
Total Lead	**10**	ug/Wipe	N/A	2.50		09/15/2002 / CRF	09/11/2002

EnviroData Group

Chain of Custody: 15308
Project Name: Wilkes-Barre, PA
Project Number: 838955

	Result	Units	Client Limit	RL	Qualifier	Analyzed/Analyst	Extracted
Laboratory Sample #: 154096 Client Sample ID: 99PAWIL02AUG16017DT Sampled: 08/16/2002 11:00							
Client Sample #:							
ICP TOTAL		**Method: SW6010B**				**Prep. Method: SW 3050B**	
Total Lead	**4.22**	ug/Wipe	N/A	2.50		09/15/2002 / CRF	09/11/2002
Laboratory Sample #: 154097 Client Sample ID: 99PAWIL02AUG16018DT Sampled: 08/16/2002 11:00							
Client Sample #:							
ICP TOTAL		**Method: SW6010B**				**Prep. Method: SW 3050B**	
Total Lead	**6.23**	ug/Wipe	N/A	2.50		09/15/2002 / CRF	09/11/2002
Laboratory Sample #: 154098 Client Sample ID: 99PAWIL02AUG16019DT Sampled: 08/16/2002 11:00							
Client Sample #:							
ICP TOTAL		**Method: SW6010B**				**Prep. Method: SW 3050B**	
Total Lead	**< 2.50**	ug/Wipe	N/A	2.50		09/15/2002 / CRF	09/11/2002
Laboratory Sample #: 154099 Client Sample ID: 99PAWIL02AUG16020DT Sampled: 08/16/2002 11:00							
Client Sample #:							
ICP TOTAL		**Method: SW6010B**				**Prep. Method: SW 3050B**	
Total Lead	**< 2.50**	ug/Wipe	N/A	2.50		09/15/2002 / CRF	09/11/2002
Laboratory Sample #: 154100 Client Sample ID: 99PAWIL02AUG16021DT Sampled: 08/16/2002 11:00							
Client Sample #:							
ICP TOTAL		**Method: SW6010B**				**Prep. Method: SW 3050B**	
Total Lead	**< 2.50**	ug/Wipe	N/A	2.50		09/15/2002 / CRF	09/11/2002
Laboratory Sample #: 154101 Client Sample ID: 99PAWIL02AUG16022DT Sampled: 08/16/2002 11:00							
Client Sample #:							
ICP TOTAL		**Method: SW6010B**				**Prep. Method: SW 3050B**	
Total Lead	**1.49**	ug/Wipe	N/A	2.50		09/15/2002 / CRF	09/11/2002
Laboratory Sample #: 154102 Client Sample ID: 99PAWIL02AUG16023DT Sampled: 08/16/2002 11:00							
Client Sample #:							
ICP TOTAL		**Method: SW6010B**				**Prep. Method: SW 3050B**	
Total Lead	**2.81**	ug/Wipe	N/A	2.50		09/15/2002 / CRF	09/11/2002
Laboratory Sample #: 154103 Client Sample ID: 99PAWIL02AUG16024DT Sampled: 08/16/2002 11:00							
Client Sample #:							
ICP TOTAL		**Method: SW6010B**				**Prep. Method: SW 3050B**	
Total Lead	**< 2.50**	ug/Wipe	N/A	2.50		09/15/2002 / CRF	09/11/2002
Laboratory Sample #: 154104 Client Sample ID: 99PAWIL02AUG16025DT Sampled: 08/16/2002 11:00							
Client Sample #:							
ICP TOTAL		**Method: SW6010B**				**Prep. Method: SW 3050B**	
Total Lead	**159**	ug/Wipe	N/A	2.50		09/15/2002 / CRF	09/11/2002

EnviroData Group

Chain of Custody: 15308
Project Name: Wilkes-Barre, PA
Project Number: 838955

	Result	Units	Client Limit	RL	Qualifier	Analyzed/Analyst	Extracted

All samples were received intact and properly preserved unless otherwise noted.
The results reported relate only to the samples tested.
This report shall not be reproduced except in full, without written approval of this laboratory.

ACCREDITED IN ACCORDANCE WITH nelac
Lab# E87286

ACCREDITED
Lab#: 100343

Submitted by: Lisa Sexton
Project Manager: Lisa Sexton

154080-104

COC15308

the IT group

ANALYSIS REQUEST AND CHAIN OF CUSTODY RECORD*

Reference Document No. 587900
Page 1 of 2

Project Name/No. 1 Ranse Cleanup-Wilkes-Barre, PA 838955
Sample Team Members 2 FK
Profit Center No. 3 5511001
Project Manager 4 BILL SCOVILLE
Purchase Order No. 6 838955
Required Report Date 11

Samples Shipment Date 7 8-28-02
Lab Destination 8 Enviro Data Group
Lab Contact 9 Lisa Sexton
Project Contact/Phone 12 Bill Scoville 513-782-4964
Carrier/Waybill No. 13 UPS/2210010277

Bill to: 5 IT Corporation
312 Directors Dr.
Knoxville, TN 37923
Attn: Accounts Payable

Report to: 10 IT Corporation
11499 Chester Rd
Cincinnati, OH 45246
Attn: Bill Scoville

White: To accompany samples
Yellow: Field copy

ONE CONTAINER PER LINE

Sample Number 14	Sample Description/Type 15	Date/Time Collected 16	Container Type 17	Sample Volume 18	Pre-servative 19	Requested Testing Program 20	Condition on Receipt 21	Disposal Record No. 22
99PAWILOZAUG16 001DT	WIPE	8-16-02 1100	POLY BAG	WIPE	NA	LEAD EPA 6010		
99PAWILOZAUG16 002DT							FOR LAB USE ONLY	
99PAWILOZAUG16 003DT								
99PAWILOZAUG16 004DT								
99PAWILOZAUG16 005DT							FOR LAB USE ONLY	
99PAWILOZAUG16 006DT								
99PAWILOZAUG16 007DT								
99PAWILOZAUG16 008DT								

Special Instructions: 23

Possible Hazard Identification: 24
Non-hazard ☐ Flammable ☐ Skin Irritant ☐ Poison B ☐ Unknown ☒

Sample Disposal: 25
Return to Client ☐ Disposal by Lab ☒ Archive _____ (mos.)

Turnaround Time Required: 26
Normal ☒ Rush ☐

QC Level: 27
I. ☐ II. ☐ III. ☐ Project Specific (specify): PER CONTRACT SPECIFICATIONS

1. Relinquished by 28 (Signature/Affiliation) [signature] / ITCorp	Date: 8-28-02 Time: 1200	1. Received by 28 (Signature/Affiliation)	Date: Time:
2. Relinquished by (Signature/Affiliation)	Date: Time:	2. Received by (Signature/Affiliation)	Date: Time:
3. Relinquished by (Signature/Affiliation) UPS	Date: 9/6/02 Time: 1400	3. Received by (Signature/Affiliation) [signature] 25	Date: 9/6/02 Time: 1400

Comments: 29 PLEASE FORWARD ALL ANALYTICAL DATA TO BILL SCOVILLE!
FAX: 513-782-4663 EMAIL: WScoville@theITGroup.com

*See back of form for special instructions.

MCA 3/15/91

154080-104

the i group

COC 15308

ANALYSIS REQUEST AND CHAIN OF CUSTODY RECORD (cont.)*

Reference Document No.[30] 587900

Project Name Range Cleanup - Wilkes-Barre, PA

Project No. 838955

Samples Shipment Date 8-28-02

ONE CONTAINER PER LINE

Sample[14] Number	Sample[15] Description/Type	Date/Time[16] Collected	Container[17] Type	Sample[18] Volume	Pre-[19] servative	Requested Testing[20] Program		Condition on[21] Receipt	Disposal[22] Record No.
99PAWILOZAUG16 009DT	WIPE	8-16-02 1100	POLY BAG	WIPE	NA	LEAD	EPA 6010		
99PAWILOZAUG16 010DT								FOR LAB USE ONLY	
99PAWILOZAUG16 011DT									
99PAWILOZAUG16 012DT								FOR LAB USE ONLY	
99PAWILOZAUG16 013DT									
99PAWILOZAUG16 014DT								FOR LAB USE ONLY	
99PAWILOZAUG16 015DT									
99PAWILOZAUG16 016DT								FOR LAB USE ONLY	
99PAWILOZAUG16 017DT									
99PAWILOZAUG16 018DT								FOR LAB USE ONLY	
99PAWILOZAUG16 019DT									
99PAWILOZAUG16 020DT								FOR LAB USE ONLY	
99PAWILOZAUG16 021DT									
99PAWILOZAUG16 022DT								FOR LAB USE ONLY	
99PAWILOZAUG16 023DT									
99PAWILOZAUG16 024DT								FOR LAB USE ONLY	
99PAWILOZAUG16 025DT									

White: To accompany samples

Yellow: Field copy

*See back of form for special instructions.

MCA 3/15/91

APPENDIX C
Clearance Certification Letter

IT Corporation
11499 Chester Road
Cincinnati, OH 45246-4012
Tel. 513.782.4700
Fax. 513.782.4807
A Member of The IT Group

December 27, 2002

SFC Claussen
Facility Management Specialist
Wilkes-Barre US Army Reserve Center
1001 Highway 315 South
Wilkes-Barre, PA 18701-6926

RE: Range Clearance Certification – Facility ID PA099, 99th RSC
USARC Nationwide Indoor Rifle Range Cleanup Project
Contract No. DACA 27-99-D-0021, Delivery Order No. 14

Dear SFC Claussen:

With this letter, IT Corporation certifies that an inspection conducted at the referenced range indicate that the range meets the project clearance objectives. Accordingly, the range is approved for your reoccupancy. Range inspection procedures consisted of the following:

- A surface-by-surface visual examination to verify that no known or suspected lead-dust surfaces are present in the range at levels that exceed the project clearance level of 200 μg/sf.
- Sampling consisting of collecting wipe samples from the floor surfaces and analyzing the samples for lead.

A formal project report for the range inspection documenting sampling locations and results is in preparation.

Please note that although the lead concentrations in the range are below the project clearance levels, small amounts of lead dust may be present in the range. Any remodeling activities that may cause a release of dust on wall and floor surfaces should be undertaken in consideration of the Occupational Safety and Health Administration (OSHA) Construction Industry Standard for Lead (29 CFR 1926.62). This OSHA standard should be reviewed before any remodeling activities are conducted. The OSHA standard requires certain controls to reduce or maintain worker exposures less than the Permissible Exposure Limit (PEL) of 50 μg of lead per cubic meter (m^3). The employer must protect the worker from lead.

Should you have any questions, please contact the undersigned at (513) 782-4700.

Sincerely,

IT CORPORATION

W. H. Scoville

William H. Scoville, P.E.
Project Manager

cc: David Dierken, U.S. Army Corps of Engineers, Louisville District
Brent Moss, 99th RSC
Glenn Speerstra, 99th RSC

Table of Contents

18. Real Property Action Plan 18-1
18.1 Purpose 18-1
18.2 Assumptions 18-1
18.3 General 18-1
18.3.1 Land and Anomalies 18-2
18.3.2 Facilities 18-2
18.3.3 Outgrants and Tenants 18-3
18.3.4 Off-post Leases 18-3
18.3.5 Infrastructure (Linear Assets) 18-3
18.3.6 Privatization Initiatives (Planned, In-progress, Complete) 18-4
18.3.7 Enclaves 18-4
18.4 Caretaker Operations 18-4
18.5 Map and Drawing Inventory 18-4
18.6 Points of Contact 18-4
18.7 Completed Forms / Attachments 18-5

List of Tables

Table 18-1 Real Property Action Plan POC List 18-5
Table 18-2 Real Property Action Plan Forms / Attachments 18-5

List of Figures

18. Real Property Action Plan

18.1 Purpose.

The Real Property Action Plan is used to define XXXXX actions relative to the BRAC recommendation to Close the Serrenti Memorial United States Army Reserve Center in Scranton, PA, the Serrenti Memorial United States Army Reserve Organizational Maintenance Shop in Scranton, PA, the United States Army Reserve Center in Wilkes-Barre, PA, the United States Army Reserve Organizational Maintenance Shop in Wilkes-Barre, PA, and relocate units to a new Armed Forces Reserve Center with an organizational maintenance facility in Scranton, PA, if the Army is able to acquire suitable land for the construction of the facilities.

18.2 Assumptions.

The below assumptions were used in creating this action plan. Conditions that change the assumptions will directly impact the plan.

- The United States Congress will not disapprove the Commission's recommendation forwarded by the President.
- Full funding will be made available.
- The U.S. Army Corps of Engineers (USACE) will meet required beneficial occupancy dates; otherwise, timelines will change and onetime cost and recurring savings will shift.
- NEPA requirements will be completed in a timely manner to support the proposed action and there will be no legal challenges.
- Command and control relationships may change throughout the process.
- Units will move only once; directly from old facility to new facility.
- Adjustments to milestones may be required based on the ability to meet the execution timeline.

18.3 General.

Land and Land Use:

a. The Serrenti facility is located on 4.55 acres of land located at 1801 Pine Street, Scranton, Pa. Acreage was purchased in 1950. The facility is located in a residential area.

b. The Wilkes-Barre facility PA is located on 4.0 acres of land located at 1001 Highway 315 South, Wilkes-Barre, Pa

18701-6926. The facility is located in a commercial area in northeast Pennsylvania adjacent to Interstate 81. Acreage was purchased in 1955.

18.3.1 Land and Anomalies.

18.3.2 Facilities.

a. The Serrenti facility consists of a main two story training building, an OMS building and an unheated storage building. The two main buildings, originally constructed in 1951, are constructed of concrete block and brick veneer. The general condition of the facility is Good.

IFS Data

1.) Training Bldg	20,206 GSF
2.) OMS Bldg	6,656 GSF
3.) Unheated Storage	85 GSF
4.) MEP Parking	4,972 SY
5.) Access Roads	129 SY
6.) Sidewalks	152 SY
7.) Fence	400 LF

b The Wilkes-Barre facility consists of a two story concrete-block constructed building with a stucco finish and OMS building built in 1955. The buildings are fully utilized by the Army Reserves. The surrounding area is commercially developed. Overall condition of the facility complex is very good.

IFS Data:

1.) Training bldg	21503 sq ft
2.) OMS	3905 sq ft
3.) POV Pavement	1950 sq yd
4.) MEP Pavement	1675 sq yd
5.) Sidewalk	281 sq yd
6.) Fence Line	418 ln ft

18.3.3 Outgrants and Tenants.

a. Current tenants of the Serrenti facility:
365 EN BN (CBT HVY) C CO
317 MD CO DENTAL SVC

OutGrant DA18620ENG1433, Construction, Operation, and Maintenance of a 6" Sanitary Sewer Line.

b. Current tenants of theWilkes-Barre facility:
828th QM CO
3/80th BN (SC) 3RD BDE
220th MP DET (CID)

Outgrant DACA-31-5-93-079, 1.40 AC, PA Department of Highways Right of Way, End Date 18-DEC-2039.

18.3.4 Off-post Leases. N/A

18.3.5 Infrastructure (Linear Assets)

a. The Serrenti facility is serviced by local electric and gas companies. Water distribution, sanitary sewer and storm sewer are also maintained thru local utility companies. (Reportable USAR Assets)Electric Power Distribution 292 LF

1) Gas Pipeline 0
2) Sanitary Sewer 529 LF
3) Water Distribution 50 LF
4) Storm Sewer 654 LF

b. The Wilkes-Barre facility is serviced by local electric and gas companies. Water distribution, sanitary sewer and storm sewer are also maintained thru local utility companies. (Reportable USAR Assets)

5) Electric Power Distribution	563 LF
6) Gas Pipeline	0
7) Sanitary Sewer	2,550 LF
8) Water Distribution	601 LF
9) Storm Sewer	0

18.3.6 Privatization Initiatives (Planned, In-progress, Complete).

None.

18.3.7 Enclaves. None.

18.4 Caretaker Operations.

a. USAR will perform caretaker operations of this facility until final disposal. PA ARNG will follow direction of the Governor of the Commonwealth of Pennsylvania.

18.5 Map and Drawing Inventory. Yes.

18.6 Points of Contact.

Table 18-1 is a list of the POCs and collaborators for the preparation of this Action Plan.

	POC Name	POC Phone	POC Email
ACSIM Real Property	Audrey Ormerod	703-601-2520	Audrey.C.Ormerod@us.army.mil
US Army Corps of Engineers HQ (HQUSACE)	Jeanne Herman	202-761-1082	Jeanne.f.herman@hq02.usace.army.mil
Current Real Property Accountability Officer	Ken Dunham	412 604-8163	kenneth.dunham@usar.army.mi
Supporting US Army Corps of Engineers RE	Robert Webb	(410) 952-3666	bob.webb@nab02.usace.army.mil

	POC Name	POC Phone	POC Email
District			
99th RRC	Ken Dunham	412 604-8163	kenneth.dunham@usar.army.mil

Table 18-1 Real Property Action Plan POC List

18.7 Completed Forms / Attachments

Table 18-2 is a list of the completed forms and attachments with accompany this Action Plan.

Form / Attachment	File Name
Land Report	TBP
List of Outgrants Report	TBP
Facilities Report	TBP
Infrastructure Report	TBP
Privatization Report	TBP
Maps, Drawings, Photos Inventory Report	TBP
Maps, Drawings, Photos	TBP
Disposal Report	TBP

Table 18-2 Real Property Action Plan Forms / Attachments

Appendix E

Regulatory Database Search Reports

The EDR-City Directory
Abstract

Wilkes-Barre USARC, PA
1001 HIGHWAY 315 S
WILKES BARRE, PA 18702

Inquiry Number: 1714247.246

Monday, July 24, 2006

EDR® Environmental Data Resources Inc

The Standard in Environmental Risk Management Information

440 Wheelers Farms Road
Milford, Connecticut 06461

Nationwide Customer Service

Telephone: 1-800-352-0050
Fax: 1-800-231-6802
Internet: www.edrnet.com

EDR City Directory Abstract

Environmental Data Resources, Inc.'s (EDR) City Directory Abstract is a screening report designed to assist environmental professionals in evaluating potential liability on a target property resulting from past activities. EDR's City Directory Abstract includes a search and abstract of available city directory data. For each address, the directory lists the name of the corresponding occupant at five year intervals.

Thank you for your business.
Please contact EDR at 1-800-352-0050
with any questions or comments.

Disclaimer - Copyright and Trademark Notice

This Report contains certain information obtained from a variety of public and other sources reasonably available to Environmental Data Resources, Inc. It cannot be concluded from this Report that coverage information for the target and surrounding properties does not exist from other sources. **NO WARRANTY EXPRESSED OR IMPLIED, IS MADE WHATSOEVER IN CONNECTION WITH THIS REPORT. ENVIRONMENTAL DATA RESOURCES, INC. SPECIFICALLY DISCLAIMS THE MAKING OF ANY SUCH WARRANTIES, INCLUDING WITHOUT LIMITATION, MERCHANTABILITY OR FITNESS FOR A PARTICULAR USE OR PURPOSE. ALL RISK IS ASSUMED BY THE USER. IN NO EVENT SHALL ENVIRONMENTAL DATA RESOURCES, INC. BE LIABLE TO ANYONE, WHETHER ARISING OUT OF ERRORS OR OMISSIONS, NEGLIGENCE, ACCIDENT OR ANY OTHER CAUSE, FOR ANY LOSS OR DAMAGE, INCLUDING, WITHOUT LIMITATION, SPECIAL, INCIDENTAL, CONSEQUENTIAL, OR EXEMPLARY DAMAGES. ANY LIABILITY ON THE PART OF ENVIRONMENTAL DATA RESOURCES, INC. IS STRICTLY LIMITED TO A REFUND OF THE AMOUNT PAID FOR THIS REPORT.** Purchaser accepts this Report "AS IS". Any analyses, estimates, ratings, environmental risk levels or risk codes provided in this Report are provided for illustrative purposes only, and are not intended to provide, nor should they be interpreted as providing any facts regarding, or prediction orforecast of, any environmental risk for any property. Only a Phase I Environmental Site Assessment performed by an environmental professional can provide information regarding the environmental risk for any property. Additionally, the information provided in this Report is not to be construed as legal advice.

Copyright 2006 by Environmental Data Resources, Inc. All rights reserved. Reproduction in any media or format, in whole or in part, of any report or map of Environmental Data Resources, Inc. or its affiliates is prohibited without prior written permission.

EDR and its logos (including Sanborn and Sanborn Map) are trademarks of Environmental Data Resources, Inc. or its affiliates. All other trademarks used herein are the property of their respective owners.

SUMMARY

- ***City Directories:***

Business directories including city, cross reference and telephone directories were reviewed, if available, at approximately five year intervals for the years spanning 1961 through 2002. (These years are not necessarily inclusive.) A summary of the information obtained is provided in the text of this report.

Date EDR Searched Historical Sources: July 24, 2006

Target Property:
1001 HIGHWAY 315 S
WILKES BARRE, PA 18702

Year	***Uses***	***Source***
1961	Street Not Listed in Research Source	Polk's City Directory
1966	Street Not Listed in Research Source	Polk's City Directory
1970	Street Not Listed in Research Source	Polk's City Directory
1975	Street Not Listed in Research Source	Polk's City Directory
1980	Street Not Listed in Research Source	Polk's City Directory
1985	Street Not Listed in Research Source	Polk's City Directory
1990	Address Not Listed in Research Source	City's City Directory
1995	Address Not Listed in Research Source	City's City Directory
1999	Address Not Listed in Research Source	City's City Directory
2002	Address Not Listed in Research Source	City's City Directory

Adjoining Properties

SURROUNDING

Multiple Addresses
WILKES BARRE, PA 18702

Year	***Uses***	***Source***
1961	Street Not Listed in Research Source	Polk's City Directory
1966	Street Not Listed in Research Source	Polk's City Directory
1970	Street Not Listed in Research Source	Polk's City Directory
1975	Street Not Listed in Research Source	Polk's City Directory
1980	Street Not Listed in Research Source	Polk's City Directory
1985	Street Not Listed in Research Source	Polk's City Directory

Year	***Uses***	***Source***
1990	Address Not Listed in Research Source	City's City Directory
1995	Address Not Listed in Research Source	City's City Directory
1999	Address Not Listed in Research Source	City's City Directory
2002	Address Not Listed in Research Source	City's City Directory

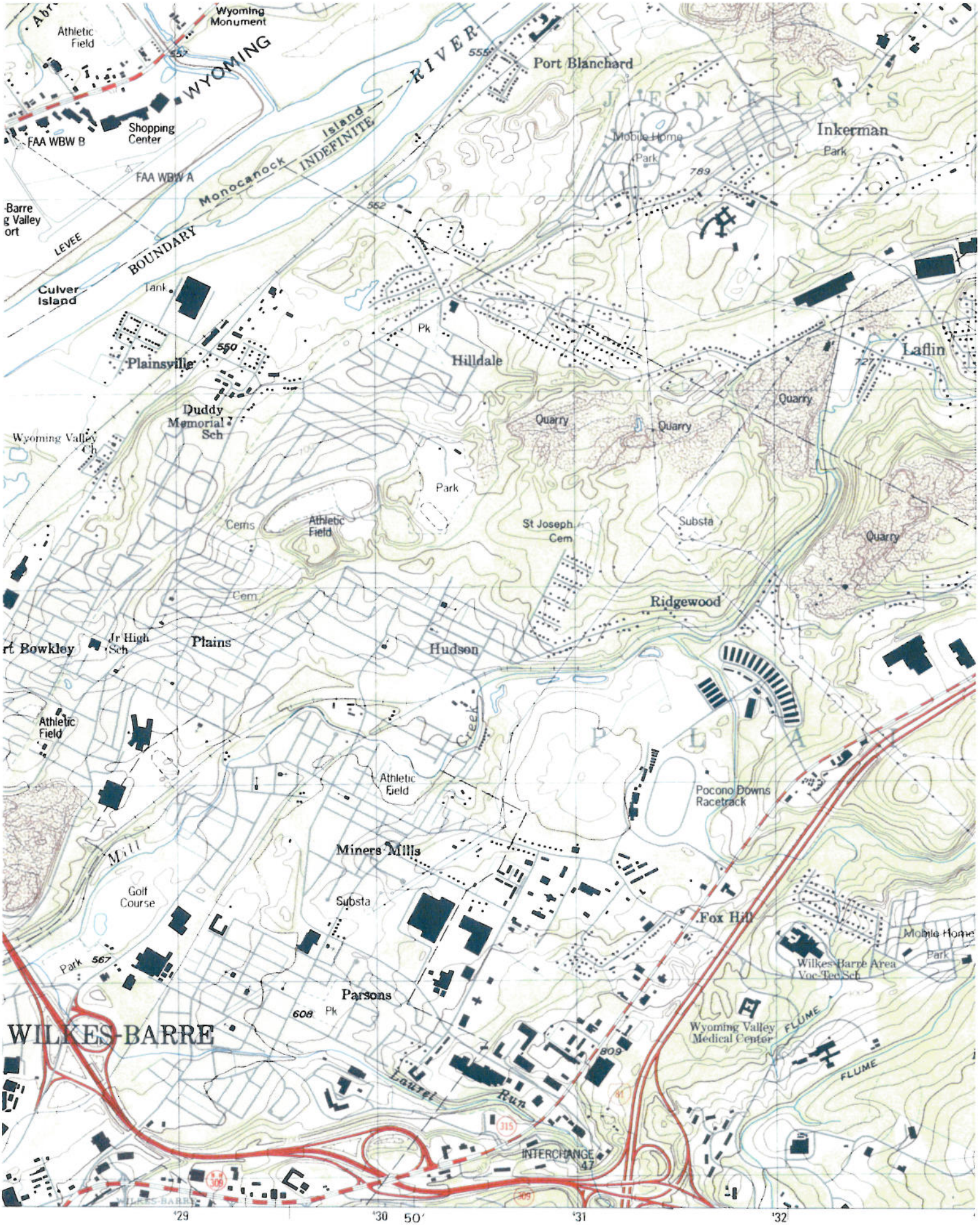

N ^ EDR INQUIRY# 1714247.244 TARGET QUAD: PITTSTON YEAR: 1999 Series: 7.5' Scale: 1:24,000

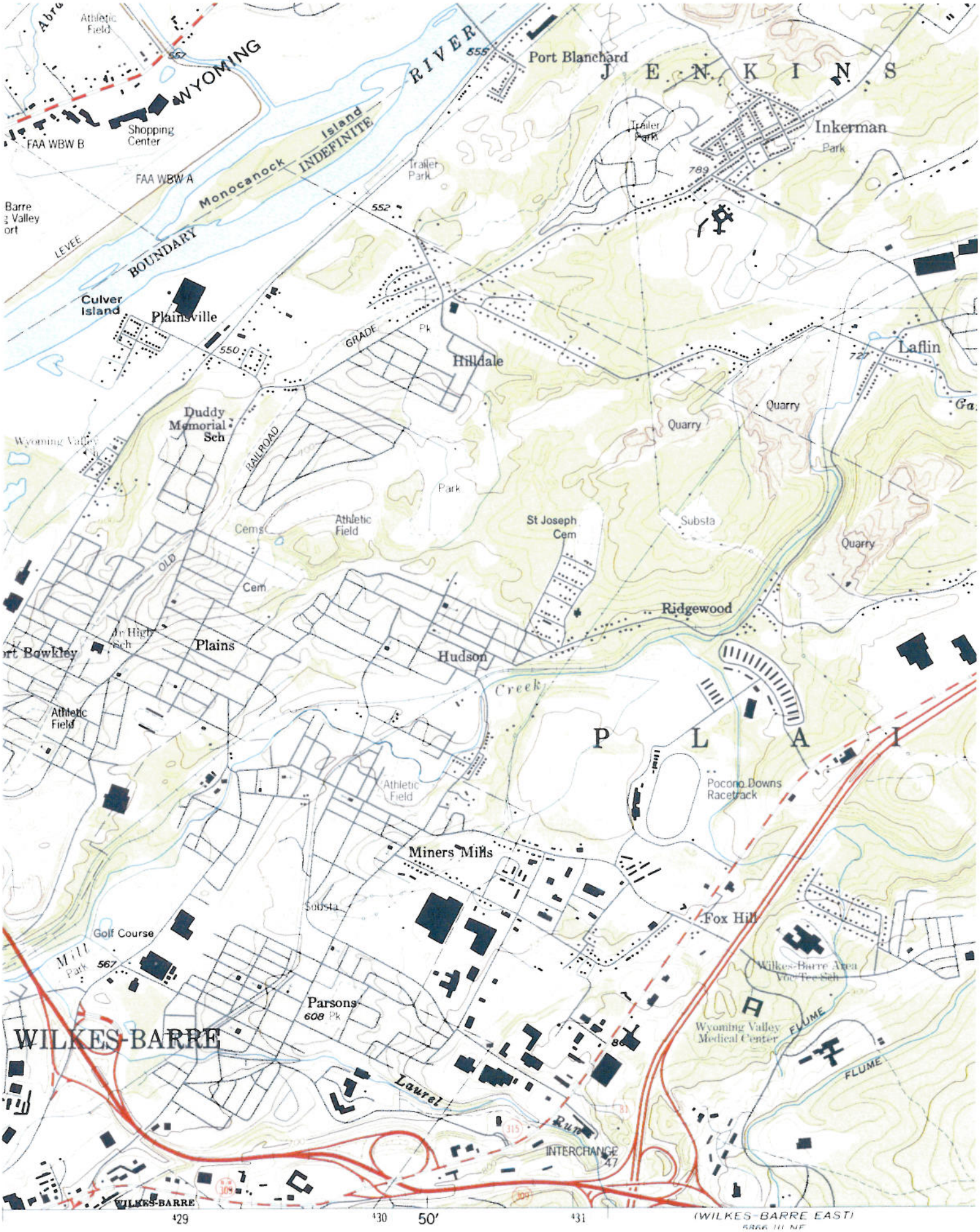

N ^ EDR INQUIRY# 1714247.244 TARGET QUAD: PITTSTON YEAR: 1994 Series: 7.5' Scale: 1:24,000

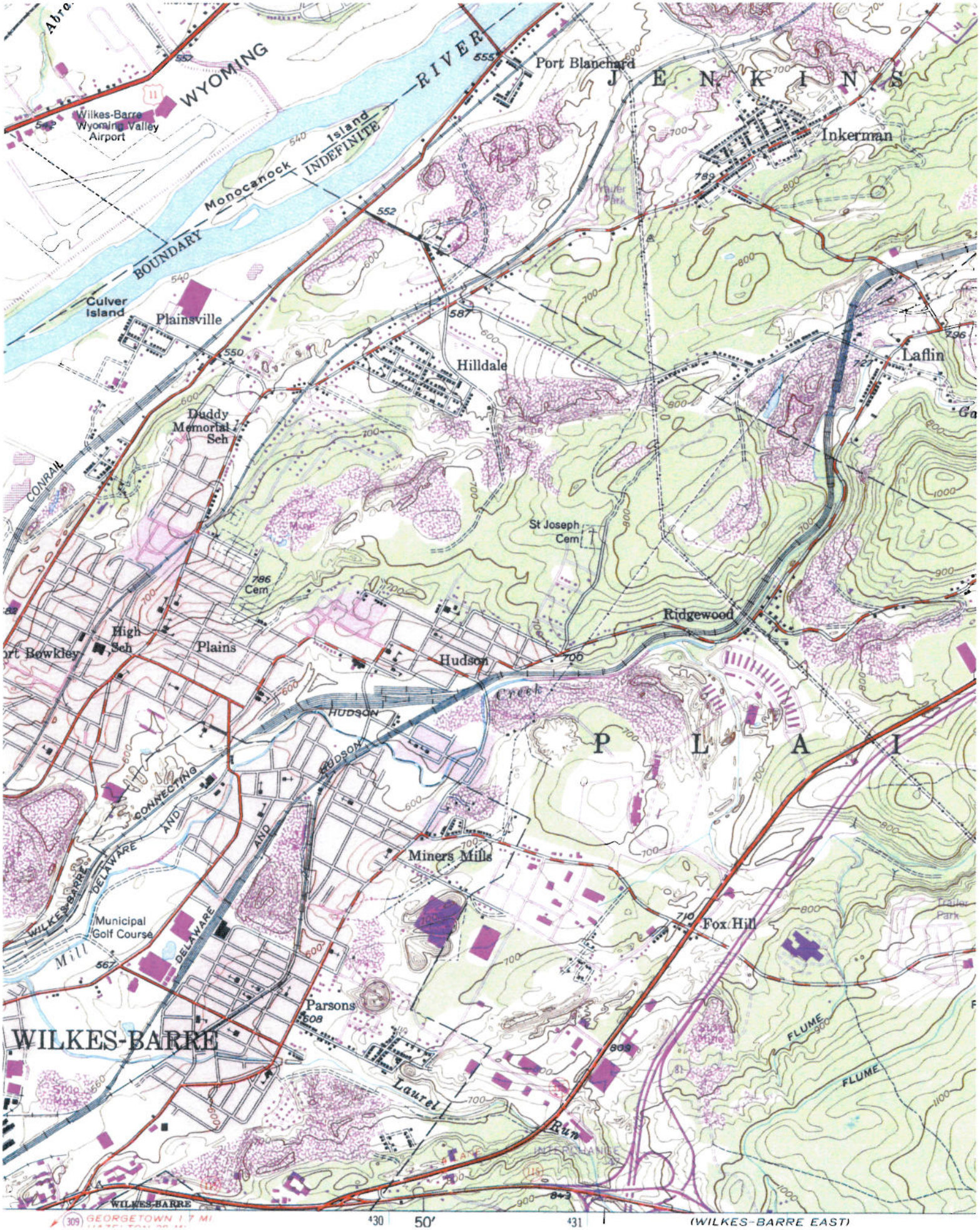

N ^ EDR INQUIRY# 1714247.244 TARGET QUAD: PITTSTON PhotoInspected: 1947-1980 Series: 7.5' Scale: 1:24,000

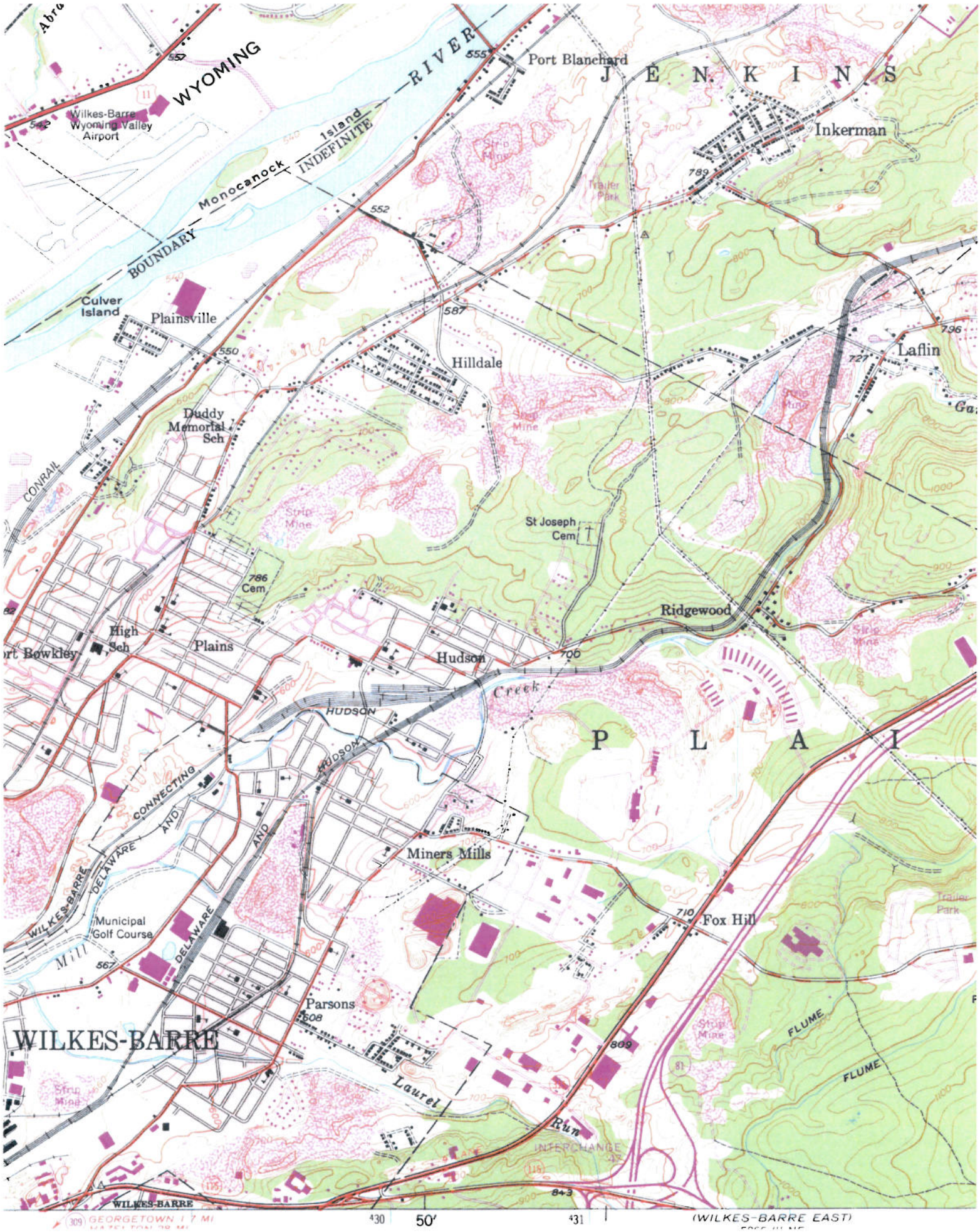

N ^ EDR INQUIRY# 1714247.244 TARGET QUAD: PITTSTON PhotoRevised: 1947-1976 Series: 7.5' Scale: 1:24,000

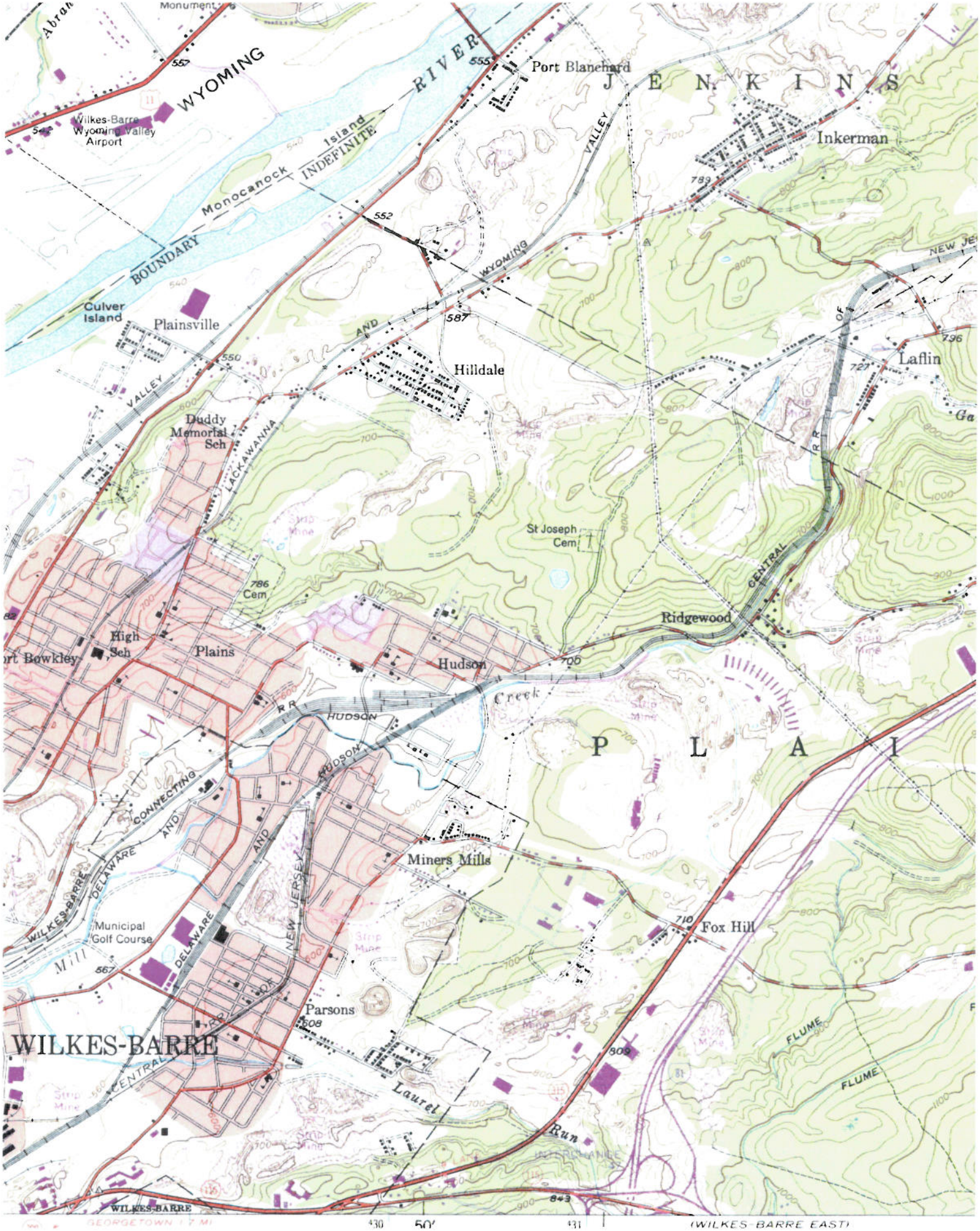

N ^ EDR INQUIRY# 1714247.244 TARGET QUAD: PITTSTON PhotoRevised: 1947-1969 Series: 7.5' Scale: 1:24,000

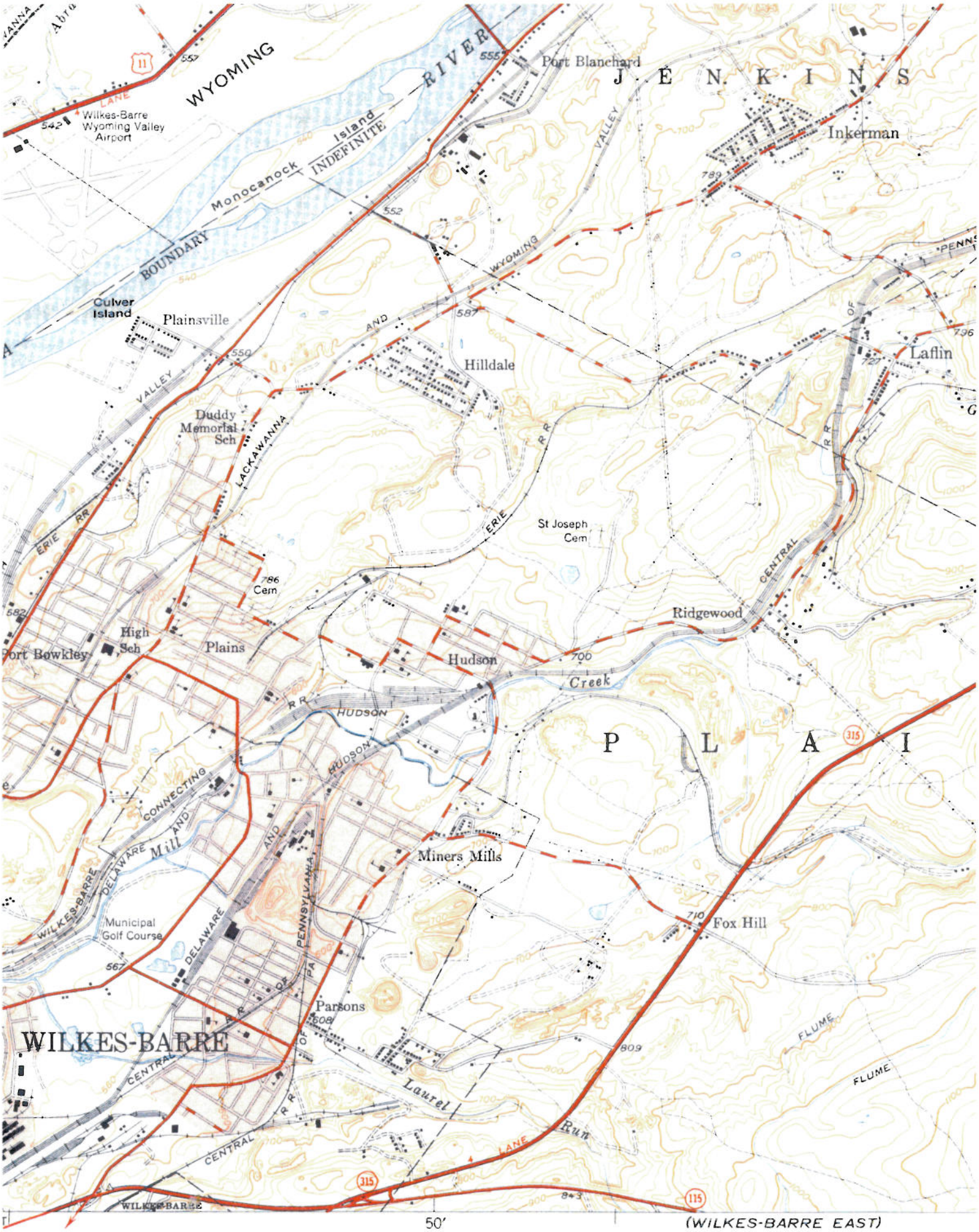

50'

N ^ EDR INQUIRY# 1714247.244 TARGET QUAD: PITTSTON YEAR: 1949 Series: 7.5' Scale: 1:24,000

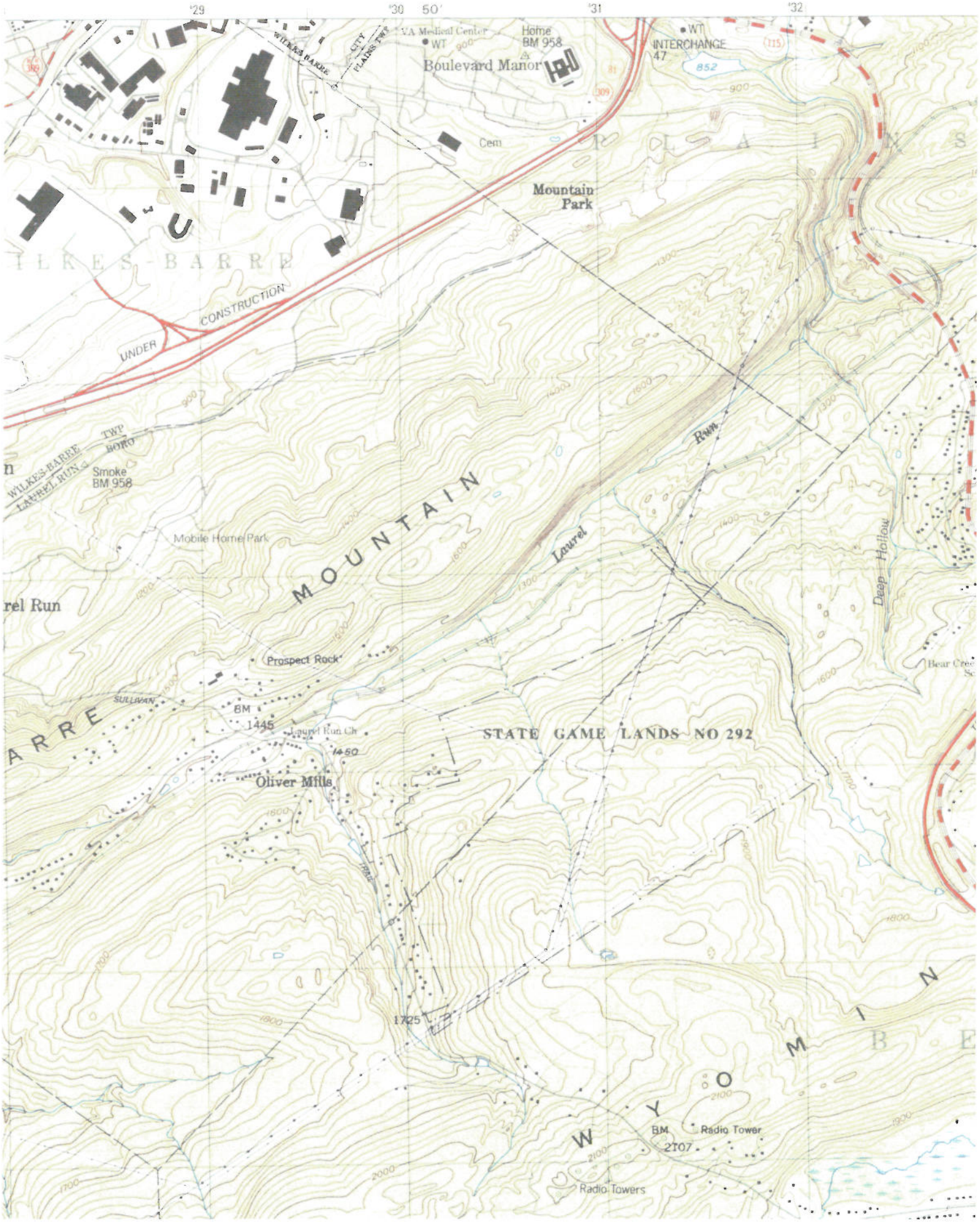

N ^ EDR INQUIRY# 1714247.244 ADJOINING QUAD: WILKES-BARREEAST YEAR: 1999 Series: 7.5' Scale: 1:24,000

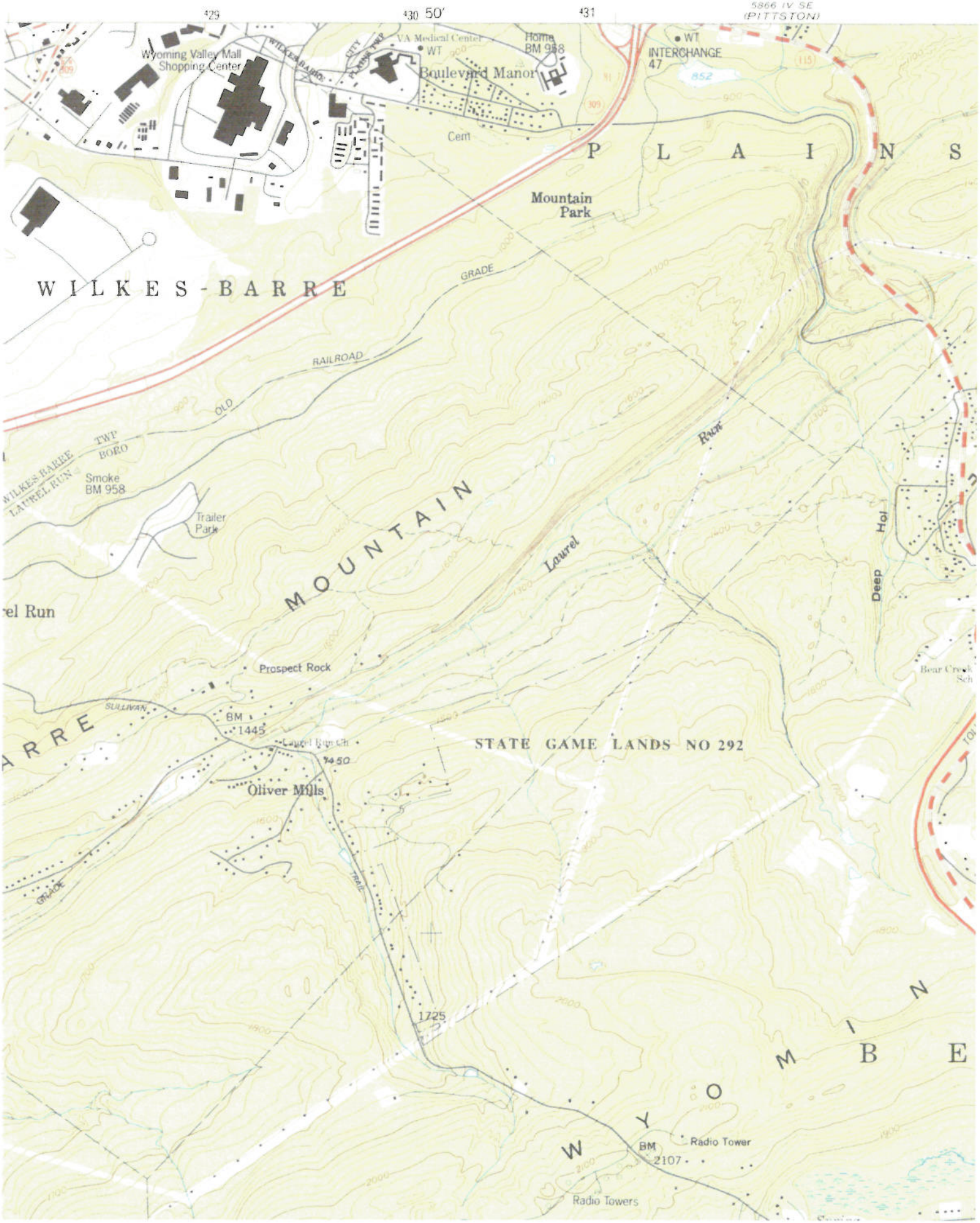

N ^ EDR INQUIRY# 1714247.244 ADJOINING QUAD: WILKES-BARREEAST YEAR: 1994 Series: 7.5' Scale: 1:24,000

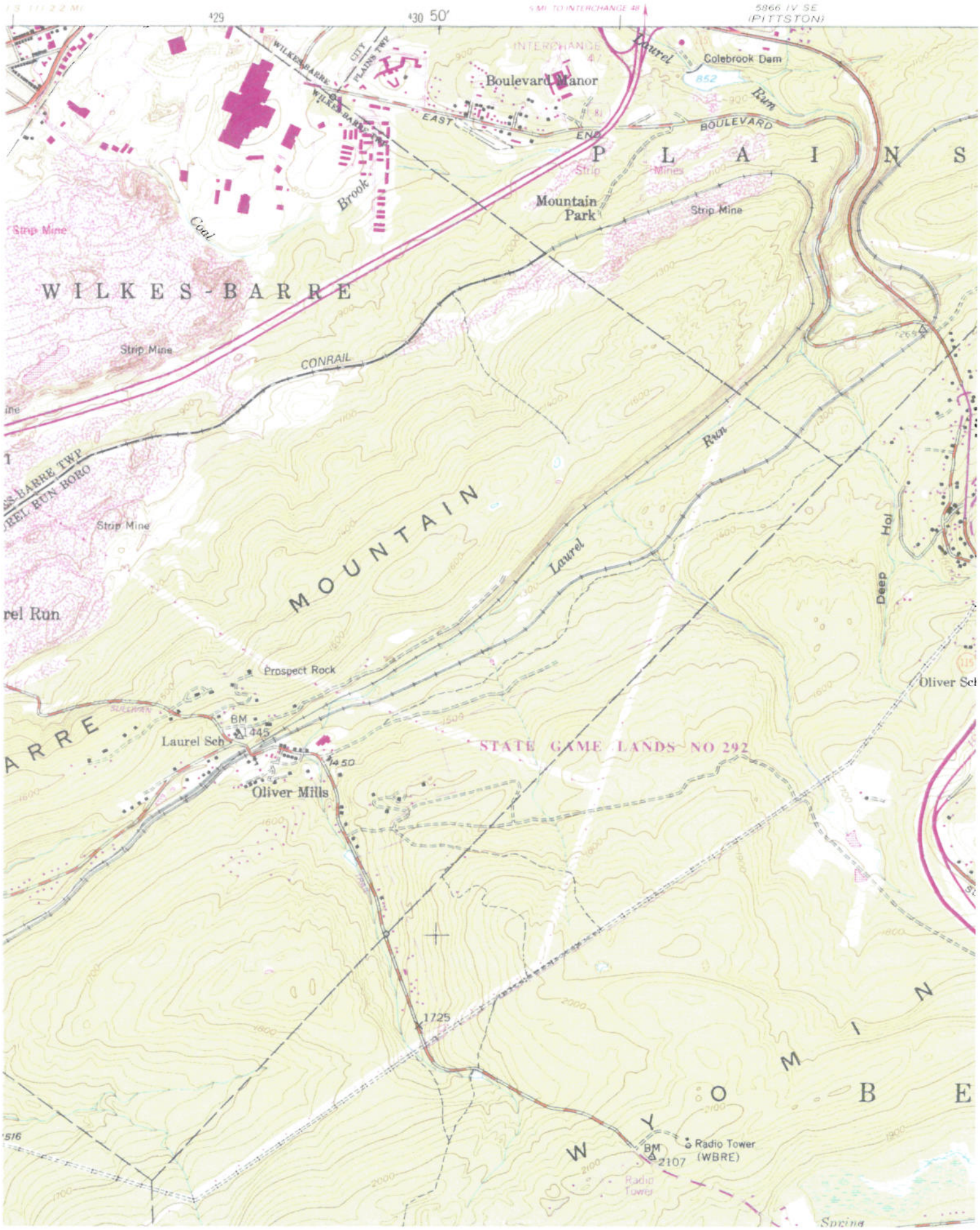

N ^ EDR INQUIRY# 1714247.244 ADJOINING QUAD: WILKES-BARREEAST PhotoRevised: 1947-1983 Series: 7.5' Scale: 1:24,000

N ^ EDR INQUIRY# 1714247.244 ADJOINING QUAD: WILKES-BARREEAST PhotoRevised: 1947-1977 Series: 7.5' Scale: 1:24,000

N ^ EDR INQUIRY# 1714247.244 ADJOINING QUAD: WILKES-BARREEAST PhotoRevised: 1947-1969 Series: 7.5' Scale: 1:24,000

N ^ EDR INQUIRY# 1714247.244 ADJOINING QUAD: WILKES-BARREEAST YEAR: 1950 Series: 7.5' Scale: 1:24,000

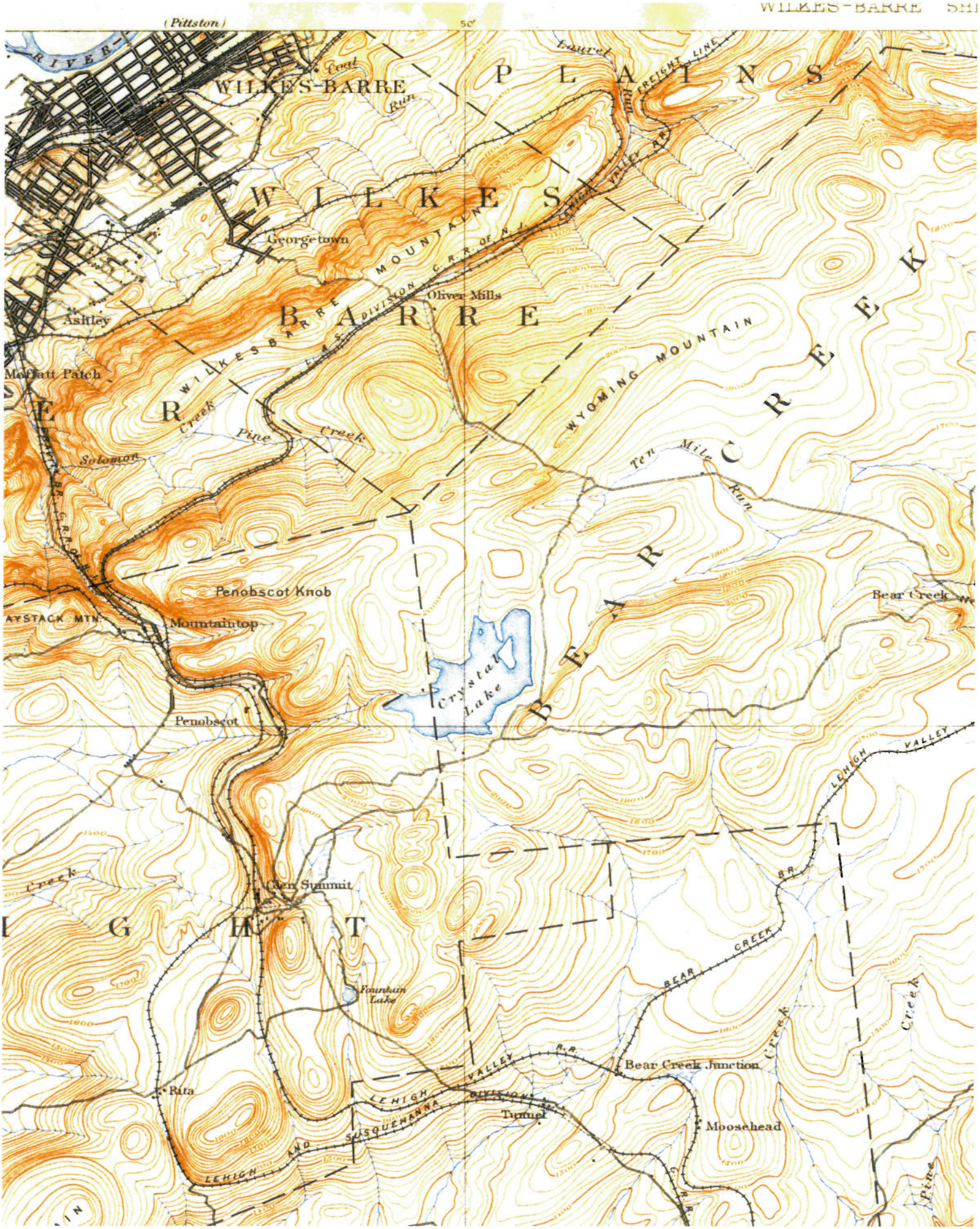

N ^ EDR INQUIRY# 1714247.244 ADJOINING QUAD: WILKESBARRE YEAR: 1894 Series: 15' Scale: 1:62,500

The EDR Radius Map
with GeoCheck®

Wilkes-Barre USARC, PA
1001 HIGHWAY 315 S
WILKES BARRE, PA 18702

Inquiry Number: 01714247.242r

July 19, 2006

EDR® Environmental Data Resources Inc

The Standard in Environmental Risk Management Information

440 Wheelers Farms Road
Milford, Connecticut 06461

Nationwide Customer Service

Telephone: 1-800-352-0050
Fax: 1-800-231-6802
Internet: www.edrnet.com

TABLE OF CONTENTS

SECTION	PAGE
Executive Summary	**ES1**
Overview Map	**2**
Detail Map	**3**
Map Findings Summary	**4**
Map Findings	**6**
Orphan Summary	**7**
Government Records Searched/Data Currency Tracking	**GR-1**

GEOCHECK ADDENDUM

Physical Setting Source Addendum	**A-1**
Physical Setting Source Summary	**A-2**
Physical Setting Source Map	**A-7**
Physical Setting Source Map Findings	**A-8**
Physical Setting Source Records Searched	**A-9**

Thank you for your business.
Please contact EDR at 1-800-352-0050
with any questions or comments.

Disclaimer - Copyright and Trademark Notice

This Report contains certain information obtained from a variety of public and other sources reasonably available to Environmental Data Resources, Inc. It cannot be concluded from this Report that coverage information for the target and surrounding properties does not exist from other sources. **NO WARRANTY EXPRESSED OR IMPLIED, IS MADE WHATSOEVER IN CONNECTION WITH THIS REPORT. ENVIRONMENTAL DATA RESOURCES, INC. SPECIFICALLY DISCLAIMS THE MAKING OF ANY SUCH WARRANTIES, INCLUDING WITHOUT LIMITATION, MERCHANTABILITY OR FITNESS FOR A PARTICULAR USE OR PURPOSE. ALL RISK IS ASSUMED BY THE USER. IN NO EVENT SHALL ENVIRONMENTAL DATA RESOURCES, INC. BE LIABLE TO ANYONE, WHETHER ARISING OUT OF ERRORS OR OMISSIONS, NEGLIGENCE, ACCIDENT OR ANY OTHER CAUSE, FOR ANY LOSS OF DAMAGE, INCLUDING, WITHOUT LIMITATION, SPECIAL, INCIDENTAL, CONSEQUENTIAL, OR EXEMPLARY DAMAGES. ANY LIABILITY ON THE PART OF ENVIRONMENTAL DATA RESOURCES, INC. IS STRICTLY LIMITED TO A REFUND OF THE AMOUNT PAID FOR THIS REPORT.** Purchaser accepts this Report "AS IS". Any analyses, estimates, ratings, environmental risk levels or risk codes provided in this Report are provided for illustrative purposes only, and are not intended to provide, nor should they be interpreted as providing any facts regarding, or prediction or forecast of, any environmental risk for any property. Only a Phase I Environmental Site Assessment performed by an environmental professional can provide information regarding the environmental risk for any property. Additionally, the information provided in this Report is not to be construed as legal advice.

Copyright 2006 by Environmental Data Resources, Inc. All rights reserved. Reproduction in any media or format, in whole or in part, of any report or map of Environmental Data Resources, Inc., or its affiliates, is prohibited without prior written permission.

EDR and its logos (including Sanborn and Sanborn Map) are trademarks of Environmental Data Resources, Inc. or its affiliates. All other trademarks used herein are the property of their respective owners.

EXECUTIVE SUMMARY

A search of available environmental records was conducted by Environmental Data Resources, Inc (EDR). The report was designed to assist parties seeking to meet the search requirements of EPA's Standards and Practices for All Appropriate Inquiries (40 CFR Part 312), the ASTM Standard Practice for Environmental Site Assessments (E 1527-05) or custom requirements developed for the evaluation of environmental risk associated with a parcel of real estate.

TARGET PROPERTY INFORMATION

ADDRESS

1001 HIGHWAY 315 S
WILKES BARRE, PA 18702

COORDINATES

Latitude (North):	41.251502 - 41˚ 15' 5.4''
Longitude (West):	75.829691 - 75˚ 49' 46.9''
Universal Tranverse Mercator:	Zone 18
UTM X (Meters):	430485.4
UTM Y (Meters):	4566796.5
Elevation:	815 ft. above sea level

USGS TOPOGRAPHIC MAP ASSOCIATED WITH TARGET PROPERTY

Target Property Map:	41075-C7 PITTSTON, PA
Most Recent Revision:	1999
South Map:	41075-B7 WILKES-BARRE EAST, PA
Most Recent Revision:	1999

TARGET PROPERTY SEARCH RESULTS

The target property was not listed in any of the databases searched by EDR.

DATABASES WITH NO MAPPED SITES

No mapped sites were found in EDR's search of available ("reasonably ascertainable ") government records either on the target property or within the search radius around the target property for the following databases:

FEDERAL RECORDS

NPL..... National Priority List
Proposed NPL..... Proposed National Priority List Sites
Delisted NPL..... National Priority List Deletions
NPL RECOVERY..... Federal Superfund Liens
CERCLIS..... Comprehensive Environmental Response, Compensation, and Liability Information System
CERC-NFRAP..... CERCLIS No Further Remedial Action Planned

EXECUTIVE SUMMARY

CORRACTS	Corrective Action Report
RCRA-TSDF	Resource Conservation and Recovery Act Information
RCRA-LQG	Resource Conservation and Recovery Act Information
ERNS	Emergency Response Notification System
HMIRS	Hazardous Materials Information Reporting System
US ENG CONTROLS	Engineering Controls Sites List
US INST CONTROL	Sites with Institutional Controls
DOD	Department of Defense Sites
FUDS	Formerly Used Defense Sites
US BROWNFIELDS	A Listing of Brownfields Sites
CONSENT	Superfund (CERCLA) Consent Decrees
ROD	Records Of Decision
UMTRA	Uranium Mill Tailings Sites
ODI	Open Dump Inventory
TRIS	Toxic Chemical Release Inventory System
TSCA	Toxic Substances Control Act
FTTS	FIFRA/ TSCA Tracking System - FIFRA (Federal Insecticide, Fungicide, & Rodenticide Act)/TSCA (Toxic Substances Control Act)
SSTS	Section 7 Tracking Systems
ICIS	Integrated Compliance Information System
PADS	PCB Activity Database System
MLTS	Material Licensing Tracking System
MINES	Mines Master Index File
FINDS	Facility Index System/Facility Registry System
RAATS	RCRA Administrative Action Tracking System

STATE AND LOCAL RECORDS

SHWS	Hazardous Sites Cleanup Act Site List
HSCA	HSCA Remedial Sites Listing
SWF/LF	Operating Facilities
HIST LF	Abandoned Landfill Inventory
LUST	Storage Tank Release Sites
UST	Listing of Pennsylvania Regulated Underground Storage Tanks
ARCHIVE UST	Archived Underground Storage Tank Sites
LAST	Storage Tank Release Sites
AST	Listing of Pennsylvania Regulated Aboveground Storage Tanks
ARCHIVE AST	Archived Aboveground Storage Tank Sites
MANIFEST	Manifest Information
ACT 2-DEED	Act 2-Deed Acknowledgment Sites
ENG CONTROLS	Engineering Controls Site Listing
INST CONTROL	Institutional Controls Site Listing
VCP	Voluntary Cleanup Program Sites
DRYCLEANERS	Drycleaner Facility Locations
BROWNFIELDS	Brownfields Sites
AIRS	Permit and Emissions Inventory Data

TRIBAL RECORDS

INDIAN RESERV	Indian Reservations

EDR PROPRIETARY RECORDS

Manufactured Gas Plants	EDR Proprietary Manufactured Gas Plants
EDR Historical Auto Stations	EDR Proprietary Historic Gas Stations

EXECUTIVE SUMMARY

EDR Historical Cleaners..... EDR Proprietary Historic Dry Cleaners

SURROUNDING SITES: SEARCH RESULTS

Surrounding sites were identified.

Elevations have been determined from the USGS Digital Elevation Model and should be evaluated on a relative (not an absolute) basis. Relative elevation information between sites of close proximity should be field verified. Sites with an elevation equal to or higher than the target property have been differentiated below from sites with an elevation lower than the target property.
Page numbers and map identification numbers refer to the EDR Radius Map report where detailed data on individual sites can be reviewed.

Sites listed in ***bold italics*** are in multiple databases.

Unmappable (orphan) sites are not considered in the foregoing analysis.

FEDERAL RECORDS

RCRAInfo: RCRAInfo is EPA's comprehensive information system, providing access to data supporting the Resource Conservation and Recovery Act (RCRA) of 1976 and the Hazardous and Solid Waste Amendments (HSWA) of 1984. RCRAInfo replaces the data recording and reporting abilities of the Resource Conservation and Recovery Information System(RCRIS). The database includes selective information on sites which generate, transport, store , treat and/or dispose of hazardous waste as defined by the Resource Conservation and Recovery Act (RCRA). Conditionally exempt small quantity generators (CESQGs) generate less than 100 kg of hazardous waste, or less than 1 kg of acutely hazardous waste per month. Small quantity generators (SQGs) generate between 100 kg and 1,000 kg of hazardous waste per month Large quantity generators generate over 1,000 kilograms (kg) of hazardous waste, or over 1 kg of acutely hazardous waste per month. Transporters are individuals or entities that move hazardous waste from the generator offsite to a facility that can recycle, treat, store, or dispose of the waste. TSDFs treat, store, or dispose of the waste.

A review of the RCRA-SQG list, as provided by EDR, and dated 03/09/2006 has revealed that there is 1 RCRA-SQG site within approximately 0.25 miles of the target property.

Lower Elevation	Address	Dist / Dir	Map ID	Page
BRIDGESTONE/FIRESTONE TIRE STO	***RTE 115 & 309***	***1/8 - 1/4 W***	***1***	***6***

STATE AND LOCAL RECORDS

UNREG LTANKS: Leaking storage tank cases from unregulated storage tanks.

A review of the UNREG LTANKS list, as provided by EDR, and dated 04/12/2002 has revealed that there is 1 UNREG LTANKS site within approximately 0.5 miles of the target property.

Lower Elevation	Address	Dist / Dir	Map ID	Page
NORTHEAST DRYWALL	359 LAIRD ST	1/4 - 1/2 NNE	2	6

EXECUTIVE SUMMARY

Due to poor or inadequate address information, the following sites were not mapped:

Site Name	Database(s)
PENN PWR & LGT WILKES-BARRE GAS	CERC-NFRAP
LUZERNE CNTY MAINT FAC 0430	LUST, LAST, ARCHIVE AST
EASTSIDE LANDFILL	HIST LF
WYOMING VALLEY MALL	UNREG LTANKS
LARKSVILLE FLYASH DISPOSAL PROJECT	SWF/LF
SEARS ROEBUCK & CO	LUST
SHEETZ 297	LUST, UST
TRION IND KNEX	LUST
POCONO DOWNS RACETRACK	LUST
PIE NATIONWIDE INC	LUST
LIBERTY EXXON	LUST
SHEETZ 344	UST
LIBERTY EXXON	UST
WILKES-BARRE MSC	AST
SHEETZ STORE NO 344	RCRA-SQG
WILLIAMS, JACK TIRE CO INC	RCRA-SQG, FINDS
HECHINGER 123	RCRA-SQG, FINDS
WVHCSI SOCIETY MILLS SITE	RCRA-SQG, FINDS
PA RACE HORSE TESTING LABORATORY	RCRA-SQG, FINDS
ATLANTIC SERVICE STATION	RCRA-SQG, FINDS
KMART	RCRA-SQG, FINDS
C & T LAWN CARE	RCRA-SQG, FINDS
SUNOCO SERVICE STATION-WILKES BARRE	RCRA-SQG, FINDS
WILKES-BARRE STEAM HEAT AUTHORITY	US BROWNFIELDS
HECHINGER STORES COMPANY	NY MANIFEST
CENTRALIA COAL CO/PORTER ASSOCIATES	NY MANIFEST
METROPOLITAN WIRE CORPORATION	NY MANIFEST

OVERVIEW MAP - 01714247.242r

0 1/4 1/2 1 Miles

- Target Property
- Sites at elevations higher than or equal to the target property
- Sites at elevations lower than the target property
- Manufactured Gas Plants
- National Priority List Sites
- Landfill Sites
- Dept. Defense Sites
- Indian Reservations BIA
- Oil & Gas pipelines
- 100-year flood zone
- 500-year flood zone
- National Wetland Inventory

This report includes Interactive Map Layers to display and/or hide map information. The legend includes only those icons for the default map view.

SITE NAME: Wilkes-Barre USARC, PA	CLIENT: CH2M Hill
ADDRESS: 1001 HIGHWAY 315 S WILKES BARRE PA 18702	CONTACT: Mary Beth Jacques
LAT/LONG: 41.2515 / 75.8297	INQUIRY #: 01714247.242r
	DATE: July 19, 2006

Copyright © 2006 EDR, Inc. © 2006 Tele Atlas Rel. 07/2005.

DETAIL MAP - 01714247.242r

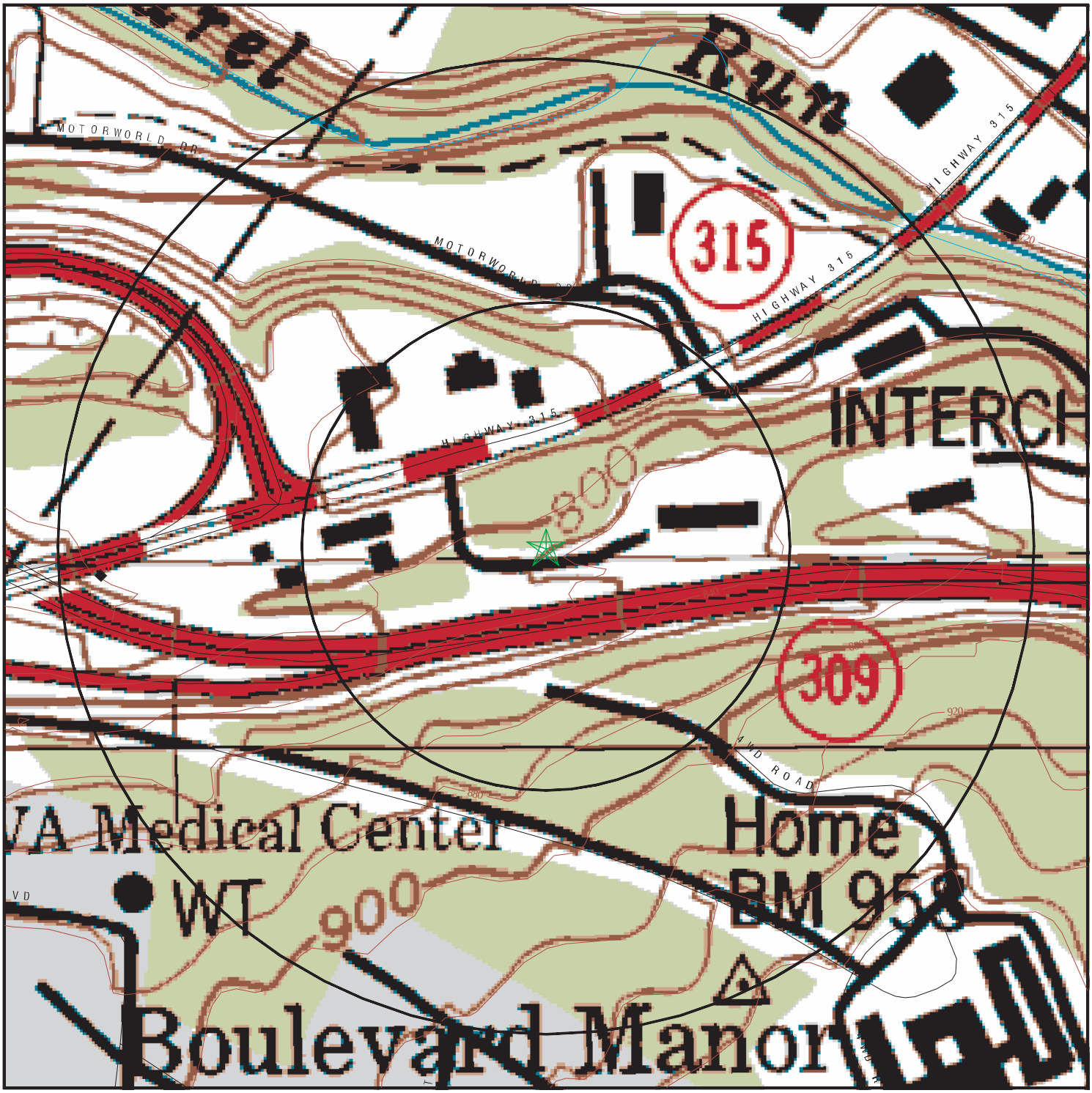

0 1/16 1/8 1/4 Miles

- Target Property
- Sites at elevations higher than or equal to the target property
- Sites at elevations lower than the target property
- Manufactured Gas Plants
- Sensitive Receptors
- National Priority List Sites
- Landfill Sites
- Dept. Defense Sites
- Indian Reservations BIA
- Oil & Gas pipelines
- 100-year flood zone
- 500-year flood zone

This report includes Interactive Map Layers to display and/or hide map information. The legend includes only those icons for the default map view.

SITE NAME: Wilkes-Barre USARC, PA	CLIENT: CH2M Hill
ADDRESS: 1001 HIGHWAY 315 S WILKES BARRE PA 18702	CONTACT: Mary Beth Jacques
LAT/LONG: 41.2515 / 75.8297	INQUIRY #: 01714247.242r
	DATE: July 19, 2006

Copyright © 2006 EDR, Inc. © 2006 Tele Atlas Rel. 07/2005.

MAP FINDINGS SUMMARY

Database	Target Property	Search Distance (Miles)	< 1/8	1/8 - 1/4	1/4 - 1/2	1/2 - 1	> 1	Total Plotted
FEDERAL RECORDS								
NPL		1.000	0	0	0	0	NR	0
Proposed NPL		1.000	0	0	0	0	NR	0
Delisted NPL		1.000	0	0	0	0	NR	0
NPL RECOVERY		TP	NR	NR	NR	NR	NR	0
CERCLIS		0.500	0	0	0	NR	NR	0
CERC-NFRAP		0.500	0	0	0	NR	NR	0
CORRACTS		1.000	0	0	0	0	NR	0
RCRA TSD		0.500	0	0	0	NR	NR	0
RCRA Lg. Quan. Gen.		0.250	0	0	NR	NR	NR	0
RCRA Sm. Quan. Gen.		0.250	0	1	NR	NR	NR	1
ERNS		TP	NR	NR	NR	NR	NR	0
HMIRS		TP	NR	NR	NR	NR	NR	0
US ENG CONTROLS		0.500	0	0	0	NR	NR	0
US INST CONTROL		0.500	0	0	0	NR	NR	0
DOD		1.000	0	0	0	0	NR	0
FUDS		1.000	0	0	0	0	NR	0
US BROWNFIELDS		0.500	0	0	0	NR	NR	0
CONSENT		1.000	0	0	0	0	NR	0
ROD		1.000	0	0	0	0	NR	0
UMTRA		0.500	0	0	0	NR	NR	0
ODI		0.500	0	0	0	NR	NR	0
TRIS		TP	NR	NR	NR	NR	NR	0
TSCA		TP	NR	NR	NR	NR	NR	0
FTTS		TP	NR	NR	NR	NR	NR	0
SSTS		TP	NR	NR	NR	NR	NR	0
ICIS		TP	NR	NR	NR	NR	NR	0
PADS		TP	NR	NR	NR	NR	NR	0
MLTS		TP	NR	NR	NR	NR	NR	0
MINES		0.250	0	0	NR	NR	NR	0
FINDS		TP	NR	NR	NR	NR	NR	0
RAATS		TP	NR	NR	NR	NR	NR	0
STATE AND LOCAL RECORDS								
State Haz. Waste		1.000	0	0	0	0	NR	0
HSCA		1.000	0	0	0	0	NR	0
SWF/LF		0.500	0	0	0	NR	NR	0
HIST LF		0.500	0	0	0	NR	NR	0
LUST		0.500	0	0	0	NR	NR	0
UNREG LTANKS		0.500	0	0	1	NR	NR	1
UST		0.250	0	0	NR	NR	NR	0
ARCHIVE UST		0.250	0	0	NR	NR	NR	0
LAST		0.500	0	0	0	NR	NR	0
AST		0.250	0	0	NR	NR	NR	0
ARCHIVE AST		TP	NR	NR	NR	NR	NR	0
MANIFEST		0.250	0	0	NR	NR	NR	0
ACT 2-DEED		0.500	0	0	0	NR	NR	0
ENG CONTROLS		0.500	0	0	0	NR	NR	0

MAP FINDINGS SUMMARY

Database	Target Property	Search Distance (Miles)	< 1/8	1/8 - 1/4	1/4 - 1/2	1/2 - 1	> 1	Total Plotted
INST CONTROL		0.500	0	0	0	NR	NR	0
VCP		0.500	0	0	0	NR	NR	0
DRYCLEANERS		0.250	0	0	NR	NR	NR	0
BROWNFIELDS		0.500	0	0	0	NR	NR	0
AIRS		TP	NR	NR	NR	NR	NR	0
TRIBAL RECORDS								
INDIAN RESERV		1.000	0	0	0	0	NR	0
EDR PROPRIETARY RECORDS								
Manufactured Gas Plants		1.000	0	0	0	0	NR	0
EDR Historical Auto Stations		TP	NR	NR	NR	NR	NR	0
EDR Historical Cleaners		TP	NR	NR	NR	NR	NR	0

NOTES:

TP = Target Property

NR = Not Requested at this Search Distance

Sites may be listed in more than one database

Map ID Direction Distance Distance (ft.) Elevation	Site	Database(s)	EDR ID Number EPA ID Number
1 **West** **1/8-1/4** **1206 ft.**	**BRIDGESTONE/FIRESTONE TIRE STORE** **RTE 115 & 309** **WILKES-BARRE, PA 18703**	**RCRA-SQG** **FINDS**	**1000695441** **PAD987379922**

Relative:
Lower

Actual:
780 ft.

RCRAInfo:

Owner: BRIDGESTONE/FIRESTONE INC
(908) 855-1900

EPA ID: PAD987379922

Contact: STEWART GREEN
(908) 855-1900

Classification: Small Quantity Generator
TSDF Activities: Not reported

Violation Status: No violations found

FINDS:

Other Pertinent Environmental Activity Identified at Site:

RCRAInfo is a national information system that supports the Resource Conservation and Recovery Act (RCRA) program through the tracking of events and activities related to facilities that generate, transport, and treat, store, or dispose of hazardous waste. RCRAInfo allows RCRA program staff to track the notification, permit, compliance, and corrective action activities required under RCRA.

---

2 **NNE** **1/4-1/2** **1793 ft.**	**NORTHEAST DRYWALL** **359 LAIRD ST** **PLAINS TWP., PA**	**UNREG LTANKS**	**S105920060** **N/A**

Relative:
Lower

Actual:
752 ft.

UNREG LTANKS:

Region : North East
Class : Cleanup of Tanks using authorities other than Act 32
Closed : Not reported
Contaminant : FUEL OIL NO. 2

ORPHAN SUMMARY

City	EDR ID	Site Name	Site Address	Zip	Database(s)
PLAINS	1008405246	SHEETZ STORE NO 344	1233 HWY 315	18702	RCRA-SQG
PLAINS TOWNSHIP	U003919161	SHEETZ 344	1233 HWY 315	18705	UST
PLAINS TOWNSHIP	1000283910	WILLIAMS, JACK TIRE CO INC	RT 315	18705	RCRA-SQG, FINDS
WILKES BARRE	S106227904	LUZERNE CNTY MAINT FAC 0430	ROUTE 115		LUST, LAST, ARCHIVE AST
WILKES BARRE	S105800961	SEARS ROEBUCK & CO	ROUTE 115		LUST
WILKES BARRE	S105920093	WYOMING VALLEY MALL	ROUTE 115		UNREG LTANKS
WILKES BARRE	1001961865	HECHINGER 123	RT 115 & 675 KIDDER ST	18702	RCRA-SQG, FINDS
WILKES BARRE	U003757801	SHEETZ 297	ROUTE 309	18702	LUST, UST
WILKES BARRE	S105954975	EASTSIDE LANDFILL	RT. 315 BEHIND POCONO DOWNS		HIST LF
WILKES BARRE	S105800976	TRION IND KNEX	RTE 315		LUST
WILKES BARRE	S105800952	POCONO DOWNS RACETRACK	1280 RT 315		LUST
WILKES BARRE	S105800950	PIE NATIONWIDE INC	RTE 315 BOX 121320		LUST
WILKES BARRE	S105800934	LIBERTY EXXON	E END BLVD		LUST
WILKES BARRE	U003919362	LIBERTY EXXON	E END BLVD	18702	UST
WILKES BARRE	A100272823	WILKES-BARRE MSC	HANOVER IND PARK	18702	AST
WILKES BARRE	1009246542	HECHINGER STORES COMPANY	675 KIDDER ST		NY MANIFEST
WILKES BARRE	S101599839	LARKSVILLE FLYASH DISPOSAL PROJECT	1 MI N OFF LR 40058	18705	SWF/LF
WILKES BARRE	1004776539	WVHCSI SOCIETY MILLS SITE	1265 SAN SOUCI HWY	18702	RCRA-SQG, FINDS
WILKES BARRE TOWNSHI	1000352703	PA RACE HORSE TESTING LABORATORY	RT 315 POCONO DOWNS RACE TRACK	18702	RCRA-SQG, FINDS
WILKES-BARRE	1004774445	ATLANTIC SERVICE STATION	RTE 115 & 315	18702	RCRA-SQG, FINDS
WILKES-BARRE	1004774760	KMART	RTE 309	18702	RCRA-SQG, FINDS
WILKES-BARRE	1000133197	C & T LAWN CARE	ROUTE 309 WILKES PLAZA	18702	RCRA-SQG, FINDS
WILKES-BARRE	1000329562	SUNOCO SERVICE STATION-WILKES BARRE	RT 309 & SCOTT ST	18705	RCRA-SQG, FINDS
WILKES-BARRE	1003865109	PENN PWR & LGT WILKES-BARRE GAS	DARLING ST	18702	CERC-NFRAP
WILKES-BARRE	1009245392	CENTRALIA COAL CO/PORTER ASSOCIATES	350 LAIRD ST	18702	NY MANIFEST
WILKES-BARRE	1009245713	METROPOLITAN WIRE CORPORATION	SECOND STREET / LAIRD STREET	18705	NY MANIFEST
WILKES-BARRE	1006883873	WILKES-BARRE STEAM HEAT AUTHORITY	2700 NORTH WASHINGTON STREET	18705	US BROWNFIELDS

GOVERNMENT RECORDS SEARCHED / DATA CURRENCY TRACKING

To maintain currency of the following federal and state databases, EDR contacts the appropriate governmental agency on a monthly or quarterly basis, as required.

Number of Days to Update: Provides confirmation that EDR is reporting records that have been updated within 90 days from the date the government agency made the information available to the public.

FEDERAL RECORDS

NPL: National Priority List

National Priorities List (Superfund). The NPL is a subset of CERCLIS and identifies over 1,200 sites for priority cleanup under the Superfund Program. NPL sites may encompass relatively large areas. As such, EDR provides polygon coverage for over 1,000 NPL site boundaries produced by EPA's Environmental Photographic Interpretation Center (EPIC) and regional EPA offices.

Date of Government Version: 04/19/2006
Date Data Arrived at EDR: 05/05/2006
Date Made Active in Reports: 05/22/2006
Number of Days to Update: 17

Source: EPA
Telephone: N/A
Last EDR Contact: 05/05/2006
Next Scheduled EDR Contact: 07/31/2006
Data Release Frequency: Quarterly

NPL Site Boundaries

Sources:

EPA's Environmental Photographic Interpretation Center (EPIC)
Telephone: 202-564-7333

EPA Region 1
Telephone 617-918-1143

EPA Region 6
Telephone: 214-655-6659

EPA Region 3
Telephone 215-814-5418

EPA Region 8
Telephone: 303-312-6774

EPA Region 4
Telephone 404-562-8033

Proposed NPL: Proposed National Priority List Sites

Date of Government Version: 04/19/2006
Date Data Arrived at EDR: 05/05/2006
Date Made Active in Reports: 05/22/2006
Number of Days to Update: 17

Source: EPA
Telephone: N/A
Last EDR Contact: 05/05/2006
Next Scheduled EDR Contact: 07/31/2006
Data Release Frequency: Quarterly

DELISTED NPL: National Priority List Deletions

The National Oil and Hazardous Substances Pollution Contingency Plan (NCP) establishes the criteria that the EPA uses to delete sites from the NPL. In accordance with 40 CFR 300.425.(e), sites may be deleted from the NPL where no further response is appropriate.

Date of Government Version: 04/19/2006
Date Data Arrived at EDR: 05/05/2006
Date Made Active in Reports: 05/22/2006
Number of Days to Update: 17

Source: EPA
Telephone: N/A
Last EDR Contact: 05/05/2006
Next Scheduled EDR Contact: 07/31/2006
Data Release Frequency: Quarterly

NPL RECOVERY: Federal Superfund Liens

Federal Superfund Liens. Under the authority granted the USEPA by CERCLA of 1980, the USEPA has the authority to file liens against real property in order to recover remedial action expenditures or when the property owner received notification of potential liability. USEPA compiles a listing of filed notices of Superfund Liens.

Date of Government Version: 10/15/1991
Date Data Arrived at EDR: 02/02/1994
Date Made Active in Reports: 03/30/1994
Number of Days to Update: 56

Source: EPA
Telephone: 202-564-4267
Last EDR Contact: 05/23/2006
Next Scheduled EDR Contact: 08/21/2006
Data Release Frequency: No Update Planned

GOVERNMENT RECORDS SEARCHED / DATA CURRENCY TRACKING

CERCLIS: Comprehensive Environmental Response, Compensation, and Liability Information System
CERCLIS contains data on potentially hazardous waste sites that have been reported to the USEPA by states, municipalities, private companies and private persons, pursuant to Section 103 of the Comprehensive Environmental Response, Compensation, and Liability Act (CERCLA). CERCLIS contains sites which are either proposed to or on the National Priorities List (NPL) and sites which are in the screening and assessment phase for possible inclusion on the NPL.

Date of Government Version: 02/01/2006
Date Data Arrived at EDR: 03/21/2006
Date Made Active in Reports: 04/13/2006
Number of Days to Update: 23

Source: EPA
Telephone: 703-413-0223
Last EDR Contact: 06/22/2006
Next Scheduled EDR Contact: 09/18/2006
Data Release Frequency: Quarterly

CERCLIS-NFRAP: CERCLIS No Further Remedial Action Planned
Archived sites are sites that have been removed and archived from the inventory of CERCLIS sites. Archived status indicates that, to the best of EPA's knowledge, assessment at a site has been completed and that EPA has determined no further steps will be taken to list this site on the National Priorities List (NPL), unless information indicates this decision was not appropriate or other considerations require a recommendation for listing at a later time. This decision does not necessarily mean that there is no hazard associated with a given site; it only means that, based upon available information, the location is not judged to be a potential NPL site.

Date of Government Version: 02/01/2006
Date Data Arrived at EDR: 03/21/2006
Date Made Active in Reports: 04/13/2006
Number of Days to Update: 23

Source: EPA
Telephone: 703-413-0223
Last EDR Contact: 06/23/2006
Next Scheduled EDR Contact: 09/18/2006
Data Release Frequency: Quarterly

CORRACTS: Corrective Action Report
CORRACTS identifies hazardous waste handlers with RCRA corrective action activity.

Date of Government Version: 03/15/2006
Date Data Arrived at EDR: 03/17/2006
Date Made Active in Reports: 04/13/2006
Number of Days to Update: 27

Source: EPA
Telephone: 800-424-9346
Last EDR Contact: 05/21/2006
Next Scheduled EDR Contact: 09/04/2006
Data Release Frequency: Quarterly

RCRA: Resource Conservation and Recovery Act Information
RCRAInfo is EPA's comprehensive information system, providing access to data supporting the Resource Conservation and Recovery Act (RCRA) of 1976 and the Hazardous and Solid Waste Amendments (HSWA) of 1984. RCRAInfo replaces the data recording and reporting abilities of the Resource Conservation and Recovery Information System (RCRIS). The database includes selective information on sites which generate, transport, store, treat and/or dispose of hazardous waste as defined by the Resource Conservation and Recovery Act (RCRA). Conditionally exempt small quantity generators (CESQGs) generate less than 100 kg of hazardous waste, or less than 1 kg of acutely hazardous waste per month. Small quantity generators (SQGs) generate between 100 kg and 1,000 kg of hazardous waste per month. Large quantity generators (LQGs) generate over 1,000 kilograms (kg) of hazardous waste, or over 1 kg of acutely hazardous waste per month. Transporters are individuals or entities that move hazardous waste from the generator off-site to a facility that can recycle, treat, store, or dispose of the waste. TSDFs treat, store, or dispose of the waste.

Date of Government Version: 03/09/2006
Date Data Arrived at EDR: 04/27/2006
Date Made Active in Reports: 05/30/2006
Number of Days to Update: 33

Source: EPA
Telephone: 800-424-9346
Last EDR Contact: 06/28/2006
Next Scheduled EDR Contact: 08/21/2006
Data Release Frequency: Quarterly

ERNS: Emergency Response Notification System
Emergency Response Notification System. ERNS records and stores information on reported releases of oil and hazardous substances.

Date of Government Version: 12/31/2005
Date Data Arrived at EDR: 01/12/2006
Date Made Active in Reports: 02/21/2006
Number of Days to Update: 40

Source: National Response Center, United States Coast Guard
Telephone: 202-260-2342
Last EDR Contact: 04/26/2006
Next Scheduled EDR Contact: 07/24/2006
Data Release Frequency: Annually

GOVERNMENT RECORDS SEARCHED / DATA CURRENCY TRACKING

HMIRS: Hazardous Materials Information Reporting System
Hazardous Materials Incident Report System. HMIRS contains hazardous material spill incidents reported to DOT.

Date of Government Version: 12/31/2005
Date Data Arrived at EDR: 04/14/2006
Date Made Active in Reports: 05/30/2006
Number of Days to Update: 46

Source: U.S. Department of Transportation
Telephone: 202-366-4555
Last EDR Contact: 07/19/2006
Next Scheduled EDR Contact: 10/16/2006
Data Release Frequency: Annually

US ENG CONTROLS: Engineering Controls Sites List
A listing of sites with engineering controls in place. Engineering controls include various forms of caps, building foundations, liners, and treatment methods to create pathway elimination for regulated substances to enter environmental media or effect human health.

Date of Government Version: 03/21/2006
Date Data Arrived at EDR: 03/27/2006
Date Made Active in Reports: 05/22/2006
Number of Days to Update: 56

Source: Environmental Protection Agency
Telephone: 703-603-8905
Last EDR Contact: 07/03/2006
Next Scheduled EDR Contact: 10/02/2006
Data Release Frequency: Varies

US INST CONTROL: Sites with Institutional Controls
A listing of sites with institutional controls in place. Institutional controls include administrative measures, such as groundwater use restrictions, construction restrictions, property use restrictions, and post remediation care requirements intended to prevent exposure to contaminants remaining on site. Deed restrictions are generally required as part of the institutional controls.

Date of Government Version: 03/21/2006
Date Data Arrived at EDR: 03/27/2006
Date Made Active in Reports: 05/22/2006
Number of Days to Update: 56

Source: Environmental Protection Agency
Telephone: 703-603-8905
Last EDR Contact: 07/03/2006
Next Scheduled EDR Contact: 10/02/2006
Data Release Frequency: Varies

DOD: Department of Defense Sites
This data set consists of federally owned or administered lands, administered by the Department of Defense, that have any area equal to or greater than 640 acres of the United States, Puerto Rico, and the U.S. Virgin Islands.

Date of Government Version: 12/31/2004
Date Data Arrived at EDR: 02/08/2005
Date Made Active in Reports: 08/04/2005
Number of Days to Update: 177

Source: USGS
Telephone: 703-692-8801
Last EDR Contact: 05/12/2006
Next Scheduled EDR Contact: 08/07/2006
Data Release Frequency: Semi-Annually

FUDS: Formerly Used Defense Sites
The listing includes locations of Formerly Used Defense Sites properties where the US Army Corps of Engineers is actively working or will take necessary cleanup actions.

Date of Government Version: 12/05/2005
Date Data Arrived at EDR: 01/19/2006
Date Made Active in Reports: 02/21/2006
Number of Days to Update: 33

Source: U.S. Army Corps of Engineers
Telephone: 202-528-4285
Last EDR Contact: 07/17/2006
Next Scheduled EDR Contact: 10/02/2006
Data Release Frequency: Varies

US BROWNFIELDS: A Listing of Brownfields Sites

Included in the listing are brownfields properties addresses by Cooperative Agreement Recipients and brownfields properties addressed by Targeted Brownfields Assessments. Targeted Brownfields Assessments-EPA's Targeted Brownfields Assessments (TBA) program is designed to help states, tribes, and municipalities--especially those without EPA Brownfields Assessment Demonstration Pilots--minimize the uncertainties of contamination often associated with brownfields. Under the TBA program, EPA provides funding and/or technical assistance for environmental assessments at brownfields sites throughout the country. Targeted Brownfields Assessments supplement and work with other efforts under EPA's Brownfields Initiative to promote cleanup and redevelopment of brownfields. Cooperative Agreement Recipients-States, political subdivisions, territories, and Indian tribes become Brownfields Cleanup Revolving Loan Fund (BCRLF) cooperative agreement recipients when they enter into BCRLF cooperative agreements with the U.S. EPA. EPA selects BCRLF cooperative agreement recipients based on a proposal and application process. BCRLF cooperative agreement recipients must use EPA funds provided through BCRLF cooperative agreement for specified brownfields-related cleanup activities.

Date of Government Version: 04/26/2006
Date Data Arrived at EDR: 04/27/2006
Date Made Active in Reports: 05/30/2006
Number of Days to Update: 33

Source: Environmental Protection Agency
Telephone: 202-566-2777
Last EDR Contact: 06/12/2006
Next Scheduled EDR Contact: 09/11/2006
Data Release Frequency: Semi-Annually

CONSENT: Superfund (CERCLA) Consent Decrees

Major legal settlements that establish responsibility and standards for cleanup at NPL (Superfund) sites. Released periodically by United States District Courts after settlement by parties to litigation matters.

Date of Government Version: 12/14/2004
Date Data Arrived at EDR: 02/15/2005
Date Made Active in Reports: 04/25/2005
Number of Days to Update: 69

Source: Department of Justice, Consent Decree Library
Telephone: Varies
Last EDR Contact: 03/13/2006
Next Scheduled EDR Contact: 07/24/2006
Data Release Frequency: Varies

ROD: Records Of Decision

Record of Decision. ROD documents mandate a permanent remedy at an NPL (Superfund) site containing technical and health information to aid in the cleanup.

Date of Government Version: 04/13/2006
Date Data Arrived at EDR: 04/28/2006
Date Made Active in Reports: 05/30/2006
Number of Days to Update: 32

Source: EPA
Telephone: 703-416-0223
Last EDR Contact: 07/06/2006
Next Scheduled EDR Contact: 10/02/2006
Data Release Frequency: Annually

UMTRA: Uranium Mill Tailings Sites

Uranium ore was mined by private companies for federal government use in national defense programs. When the mills shut down, large piles of the sand-like material (mill tailings) remain after uranium has been extracted from the ore. Levels of human exposure to radioactive materials from the piles are low; however, in some cases tailings were used as construction materials before the potential health hazards of the tailings were recognized.

Date of Government Version: 11/04/2005
Date Data Arrived at EDR: 11/28/2005
Date Made Active in Reports: 01/30/2006
Number of Days to Update: 63

Source: Department of Energy
Telephone: 505-845-0011
Last EDR Contact: 06/21/2006
Next Scheduled EDR Contact: 09/18/2006
Data Release Frequency: Varies

ODI: Open Dump Inventory

An open dump is defined as a disposal facility that does not comply with one or more of the Part 257 or Part 258 Subtitle D Criteria.

Date of Government Version: 06/30/1985
Date Data Arrived at EDR: 08/09/2004
Date Made Active in Reports: 09/17/2004
Number of Days to Update: 39

Source: Environmental Protection Agency
Telephone: 800-424-9346
Last EDR Contact: 06/09/2004
Next Scheduled EDR Contact: N/A
Data Release Frequency: No Update Planned

GOVERNMENT RECORDS SEARCHED / DATA CURRENCY TRACKING

TRIS: Toxic Chemical Release Inventory System

Toxic Release Inventory System. TRIS identifies facilities which release toxic chemicals to the air, water and land in reportable quantities under SARA Title III Section 313.

Date of Government Version: 12/31/2003	Source: EPA
Date Data Arrived at EDR: 07/13/2005	Telephone: 202-566-0250
Date Made Active in Reports: 08/17/2005	Last EDR Contact: 06/22/2006
Number of Days to Update: 35	Next Scheduled EDR Contact: 09/18/2006
	Data Release Frequency: Annually

TSCA: Toxic Substances Control Act

Toxic Substances Control Act. TSCA identifies manufacturers and importers of chemical substances included on the TSCA Chemical Substance Inventory list. It includes data on the production volume of these substances by plant site.

Date of Government Version: 12/31/2002	Source: EPA
Date Data Arrived at EDR: 04/14/2006	Telephone: 202-260-5521
Date Made Active in Reports: 05/30/2006	Last EDR Contact: 07/17/2006
Number of Days to Update: 46	Next Scheduled EDR Contact: 10/16/2006
	Data Release Frequency: Every 4 Years

FTTS: FIFRA/ TSCA Tracking System - FIFRA (Federal Insecticide, Fungicide, & Rodenticide Act)/TSCA (Toxic Substances Control Act)

FTTS tracks administrative cases and pesticide enforcement actions and compliance activities related to FIFRA, TSCA and EPCRA (Emergency Planning and Community Right-to-Know Act). To maintain currency, EDR contacts the Agency on a quarterly basis.

Date of Government Version: 03/29/2006	Source: EPA/Office of Prevention, Pesticides and Toxic Substances
Date Data Arrived at EDR: 04/26/2006	Telephone: 202-566-1667
Date Made Active in Reports: 05/30/2006	Last EDR Contact: 06/19/2006
Number of Days to Update: 34	Next Scheduled EDR Contact: 09/18/2006
	Data Release Frequency: Quarterly

FTTS INSP: FIFRA/ TSCA Tracking System - FIFRA (Federal Insecticide, Fungicide, & Rodenticide Act)/TSCA (Toxic Substances Control Act)

Date of Government Version: 03/31/2006	Source: EPA
Date Data Arrived at EDR: 04/26/2006	Telephone: 202-566-1667
Date Made Active in Reports: 05/30/2006	Last EDR Contact: 06/19/2006
Number of Days to Update: 34	Next Scheduled EDR Contact: 09/18/2006
	Data Release Frequency: Quarterly

SSTS: Section 7 Tracking Systems

Section 7 of the Federal Insecticide, Fungicide and Rodenticide Act, as amended (92 Stat. 829) requires all registered pesticide-producing establishments to submit a report to the Environmental Protection Agency by March 1st each year. Each establishment must report the types and amounts of pesticides, active ingredients and devices being produced, and those having been produced and sold or distributed in the past year.

Date of Government Version: 12/31/2004	Source: EPA
Date Data Arrived at EDR: 05/11/2006	Telephone: 202-564-4203
Date Made Active in Reports: 05/22/2006	Last EDR Contact: 07/17/2006
Number of Days to Update: 11	Next Scheduled EDR Contact: 10/16/2006
	Data Release Frequency: Annually

ICIS: Integrated Compliance Information System

The Integrated Compliance Information System (ICIS) supports the information needs of the national enforcement and compliance program as well as the unique needs of the National Pollutant Discharge Elimination System (NPDES) program.

Date of Government Version: 02/13/2006	Source: Environmental Protection Agency
Date Data Arrived at EDR: 04/21/2006	Telephone: 202-564-5088
Date Made Active in Reports: 05/11/2006	Last EDR Contact: 07/17/2006
Number of Days to Update: 20	Next Scheduled EDR Contact: 10/16/2006
	Data Release Frequency: Quarterly

PADS: PCB Activity Database System

PCB Activity Database. PADS Identifies generators, transporters, commercial storers and/or brokers and disposers of PCB's who are required to notify the EPA of such activities.

Date of Government Version: 12/27/2005
Date Data Arrived at EDR: 02/08/2006
Date Made Active in Reports: 02/27/2006
Number of Days to Update: 19

Source: EPA
Telephone: 202-566-0500
Last EDR Contact: 06/28/2006
Next Scheduled EDR Contact: 08/07/2006
Data Release Frequency: Annually

MLTS: Material Licensing Tracking System

MLTS is maintained by the Nuclear Regulatory Commission and contains a list of approximately 8,100 sites which possess or use radioactive materials and which are subject to NRC licensing requirements. To maintain currency, EDR contacts the Agency on a quarterly basis.

Date of Government Version: 04/12/2006
Date Data Arrived at EDR: 04/26/2006
Date Made Active in Reports: 05/30/2006
Number of Days to Update: 34

Source: Nuclear Regulatory Commission
Telephone: 301-415-7169
Last EDR Contact: 07/03/2006
Next Scheduled EDR Contact: 10/02/2006
Data Release Frequency: Quarterly

MINES: Mines Master Index File

Contains all mine identification numbers issued for mines active or opened since 1971. The data also includes violation information.

Date of Government Version: 02/09/2006
Date Data Arrived at EDR: 03/29/2006
Date Made Active in Reports: 05/30/2006
Number of Days to Update: 62

Source: Department of Labor, Mine Safety and Health Administration
Telephone: 303-231-5959
Last EDR Contact: 06/28/2006
Next Scheduled EDR Contact: 09/25/2006
Data Release Frequency: Semi-Annually

FINDS: Facility Index System/Facility Registry System

Facility Index System. FINDS contains both facility information and 'pointers' to other sources that contain more detail. EDR includes the following FINDS databases in this report: PCS (Permit Compliance System), AIRS (Aerometric Information Retrieval System), DOCKET (Enforcement Docket used to manage and track information on civil judicial enforcement cases for all environmental statutes), FURS (Federal Underground Injection Control), C-DOCKET (Criminal Docket System used to track criminal enforcement actions for all environmental statutes), FFIS (Federal Facilities Information System), STATE (State Environmental Laws and Statutes), and PADS (PCB Activity Data System).

Date of Government Version: 04/27/2006
Date Data Arrived at EDR: 05/02/2006
Date Made Active in Reports: 05/30/2006
Number of Days to Update: 28

Source: EPA
Telephone: N/A
Last EDR Contact: 04/03/2006
Next Scheduled EDR Contact: 07/03/2006
Data Release Frequency: Quarterly

RAATS: RCRA Administrative Action Tracking System

RCRA Administration Action Tracking System. RAATS contains records based on enforcement actions issued under RCRA pertaining to major violators and includes administrative and civil actions brought by the EPA. For administration actions after September 30, 1995, data entry in the RAATS database was discontinued. EPA will retain a copy of the database for historical records. It was necessary to terminate RAATS because a decrease in agency resources made it impossible to continue to update the information contained in the database.

Date of Government Version: 04/17/1995
Date Data Arrived at EDR: 07/03/1995
Date Made Active in Reports: 08/07/1995
Number of Days to Update: 35

Source: EPA
Telephone: 202-564-4104
Last EDR Contact: 06/05/2006
Next Scheduled EDR Contact: 09/04/2006
Data Release Frequency: No Update Planned

BRS: Biennial Reporting System

The Biennial Reporting System is a national system administered by the EPA that collects data on the generation and management of hazardous waste. BRS captures detailed data from two groups: Large Quantity Generators (LQG) and Treatment, Storage, and Disposal Facilities.

Date of Government Version: 12/31/2003
Date Data Arrived at EDR: 06/17/2005
Date Made Active in Reports: 08/04/2005
Number of Days to Update: 48

Source: EPA/NTIS
Telephone: 800-424-9346
Last EDR Contact: 06/30/2006
Next Scheduled EDR Contact: 09/11/2006
Data Release Frequency: Biennially

STATE AND LOCAL RECORDS

SHWS: Hazardous Sites Cleanup Act Site List

The Hazardous Sites Cleanup Act Site List includes sites listed on PA Priority List, sites delisted from PA Priority List, Interim Response Completed sites, and Sites Being Studied or Response Being Planned.

Date of Government Version: 02/01/2006
Date Data Arrived at EDR: 02/17/2006
Date Made Active in Reports: 03/15/2006
Number of Days to Update: 26

Source: Department Environmental Protection
Telephone: 717-783-7816
Last EDR Contact: 06/16/2006
Next Scheduled EDR Contact: 08/14/2006
Data Release Frequency: Semi-Annually

HSCA: HSCA Remedial Sites Listing

A list of remedial sites on the PA Priority List. This is the PA state equivalent of the federal NPL superfund list.

Date of Government Version: 05/05/2004
Date Data Arrived at EDR: 05/26/2004
Date Made Active in Reports: 06/24/2004
Number of Days to Update: 29

Source: Department of Environmental Protection
Telephone: 717-783-7816
Last EDR Contact: 02/17/2006
Next Scheduled EDR Contact: 05/15/2006
Data Release Frequency: Varies

SWF/LF: Operating Facilities

Date of Government Version: 03/15/2006
Date Data Arrived at EDR: 03/31/2006
Date Made Active in Reports: 05/04/2006
Number of Days to Update: 34

Source: Department of Environmental Protection
Telephone: 717-787-7564
Last EDR Contact: 06/22/2006
Next Scheduled EDR Contact: 09/18/2006
Data Release Frequency: Semi-Annually

HIST LF: Abandoned Landfill Inventory

The report provides facility information recorded in the Pennsylvania Department of Environmental Protection ALI database. Some of this information has been abstracted from old records and may not accurately reflect the current conditions and status at these facilities

Date of Government Version: 01/04/2005
Date Data Arrived at EDR: 01/04/2005
Date Made Active in Reports: 02/04/2005
Number of Days to Update: 31

Source: Department of Environmental Protection
Telephone: 717-787-7564
Last EDR Contact: 06/19/2006
Next Scheduled EDR Contact: 09/18/2006
Data Release Frequency: Varies

HIST LF INACTIVE: Inactive Facilities List

A listing of inactive non-hazardous facilities (10000 & 300000 series). This listing is no longer updated or maintained by the Department of Environmental Protection. At the time the listing was available, the DEP?s name was the Department of Environmental Resources.

Date of Government Version: 12/20/1994
Date Data Arrived at EDR: 07/12/2005
Date Made Active in Reports: 08/11/2005
Number of Days to Update: 30

Source: Department of Environmental Protection
Telephone: 717-787-7381
Last EDR Contact: 06/21/2005
Next Scheduled EDR Contact: 12/19/2005
Data Release Frequency: No Update Planned

HIST LF INVENTORY: Facility Inventory

A listing of solid waste facilities. This listing is no longer updated or maintained by the Department of Environmental Protection. At the time the listing was available, the DEP?s name was the Department of Environmental Resources.

Date of Government Version: 06/02/1999
Date Data Arrived at EDR: 07/12/2005
Date Made Active in Reports: 08/11/2005
Number of Days to Update: 30

Source: Department of Environmental Protection
Telephone: 717-787-7381
Last EDR Contact: 09/19/2005
Next Scheduled EDR Contact: 12/19/2005
Data Release Frequency: No Update Planned

LUST: Storage Tank Release Sites
Leaking Underground Storage Tank Incident Reports. LUST records contain an inventory of reported leaking underground storage tank incidents. Not all states maintain these records, and the information stored varies by state.

Date of Government Version: 03/09/2006
Date Data Arrived at EDR: 04/11/2006
Date Made Active in Reports: 05/04/2006
Number of Days to Update: 23

Source: Department of Environmental Protection
Telephone: 717-783-7509
Last EDR Contact: 07/12/2006
Next Scheduled EDR Contact: 10/09/2006
Data Release Frequency: Semi-Annually

UNREG LTANKS: Unregulated Tank Cases
Leaking storage tank cases from unregulated storage tanks.

Date of Government Version: 04/12/2002
Date Data Arrived at EDR: 08/14/2003
Date Made Active in Reports: 08/29/2003
Number of Days to Update: 15

Source: Department of Environmental Protection
Telephone: 717-783-7509
Last EDR Contact: 08/14/2003
Next Scheduled EDR Contact: N/A
Data Release Frequency: No Update Planned

UST: Listing of Pennsylvania Regulated Underground Storage Tanks
Registered Underground Storage Tanks. UST's are regulated under Subtitle I of the Resource Conservation and Recovery Act (RCRA) and must be registered with the state department responsible for administering the UST program. Available information varies by state program.

Date of Government Version: 06/01/2006
Date Data Arrived at EDR: 06/07/2006
Date Made Active in Reports: 06/30/2006
Number of Days to Update: 23

Source: Department of Environmental Protection
Telephone: 717-772-5599
Last EDR Contact: 07/11/2006
Next Scheduled EDR Contact: 10/09/2006
Data Release Frequency: Varies

ARCHIVE UST: Archived Underground Storage Tank Sites
The list includes tanks storing highly hazardous substances that were removed from the DEP's Storage Tank Information database because of the Department's policy on sensitive information. The list also may include tanks that are removed or permanently closed.

Date of Government Version: 06/01/2006
Date Data Arrived at EDR: 06/07/2006
Date Made Active in Reports: 07/12/2006
Number of Days to Update: 35

Source: Department of Environmental Protection
Telephone: 717-772-5599
Last EDR Contact: 07/11/2006
Next Scheduled EDR Contact: 10/09/2006
Data Release Frequency: Varies

LAST: Storage Tank Release Sites
Leaking Aboveground Storage Tank Incident Reports.

Date of Government Version: 03/09/2006
Date Data Arrived at EDR: 04/11/2006
Date Made Active in Reports: 05/04/2006
Number of Days to Update: 23

Source: Department of Environmental Protection
Telephone: 717-783-7509
Last EDR Contact: 07/12/2006
Next Scheduled EDR Contact: 10/09/2006
Data Release Frequency: Semi-Annually

AST: Listing of Pennsylvania Regulated Aboveground Storage Tanks
Registered Aboveground Storage Tanks.

Date of Government Version: 06/01/2006
Date Data Arrived at EDR: 06/07/2006
Date Made Active in Reports: 06/30/2006
Number of Days to Update: 23

Source: Department of Environmental Protection
Telephone: 717-772-5599
Last EDR Contact: 07/11/2006
Next Scheduled EDR Contact: 10/09/2006
Data Release Frequency: Varies

ARCHIVE AST: Archived Aboveground Storage Tank Sites

The list includes aboveground tanks with a capacity greater than 21,000 gallons that were removed from the DEP's Storage Tank Information database because of the Department's policy on sensitive information. The list also may include tanks that are removed or permanently closed.

Date of Government Version: 06/01/2006
Date Data Arrived at EDR: 06/07/2006
Date Made Active in Reports: 07/12/2006
Number of Days to Update: 35

Source: Department of Environmental Protection
Telephone: 717-772-5599
Last EDR Contact: 07/11/2006
Next Scheduled EDR Contact: 10/09/2006
Data Release Frequency: Varies

MANIFEST: Manifest Information

Hazardous waste manifest information.

Date of Government Version: 12/31/2005
Date Data Arrived at EDR: 05/04/2006
Date Made Active in Reports: 06/06/2006
Number of Days to Update: 33

Source: Department of Environmental Protection
Telephone: N/A
Last EDR Contact: 06/12/2006
Next Scheduled EDR Contact: 09/11/2006
Data Release Frequency: Annually

ACT 2-DEED: Act 2-Deed Acknowledgment Sites

This listing pertains to sites where the Department has approved a cleanup requiring a deed acknowledgment under Act 2. This list includes sites remediated to a non-residential Statewide health standard (Section 303(g)); all sites demonstrating attainment of a Site-specific standard (Section 304(m)); and sites being remediated as a special industrial area (Section 305(g)). Persons who remediated a site to a standard that requires a deed acknowledgment shall comply with the requirements of the Solid Waste Management Act or the Hazardous Sites Cleanup Act, as referenced in Act 2. These statutes require a property description section in the deed concerning the hazardous substance disposal on the site. The location of disposed hazardous substances and a description of the type of hazardous substances disposed on the site shall be included in the deed acknowledgment. A deed acknowledgment is required at the time of conveyance of the property.

Date of Government Version: 06/20/2006
Date Data Arrived at EDR: 06/21/2006
Date Made Active in Reports: 07/12/2006
Number of Days to Update: 21

Source: Department of Environmental Protection
Telephone: 717-783-9470
Last EDR Contact: 06/19/2006
Next Scheduled EDR Contact: 08/14/2006
Data Release Frequency: Varies

ENG CONTROLS: Engineering Controls Site Listing

Under the Land Recycling Act (Act 2) persons who perform a site cleanup using the site-specific standard or the special industrial area standard may use engineering or institutional controls as part of the response action. Engineering controls include various forms of caps, building foundations, liners, and treatment methods to create pathway elimination for regulated substances to enter environmental media or effect human health.

Date of Government Version: 03/08/2006
Date Data Arrived at EDR: 05/16/2006
Date Made Active in Reports: 06/06/2006
Number of Days to Update: 21

Source: Department of Environmental Protection
Telephone: 717-783-9470
Last EDR Contact: 05/16/2006
Next Scheduled EDR Contact: 08/14/2006
Data Release Frequency: Varies

INST CONTROL: Institutional Controls Site Listing

Under the Land Recycling Act (Act 2) persons who perform a site cleanup using the site-specific standard or the special industrial area standard may use engineering or institutional controls as part of the response action. Institutional controls include administrative measures, such as groundwater use restrictions, construction restrictions, property use restrictions, and post remediation care requirements intended to prevent exposure to contaminants remaining on site. Deed restrictions are generally required as part of the institutional controls.

Date of Government Version: 03/08/2006
Date Data Arrived at EDR: 05/16/2006
Date Made Active in Reports: 06/06/2006
Number of Days to Update: 21

Source: Department of Environmental Protection
Telephone: 717-783-9470
Last EDR Contact: 05/16/2006
Next Scheduled EDR Contact: 08/14/2006
Data Release Frequency: Varies

VCP: Voluntary Cleanup Program Sites
Sites involved in the Voluntary Cleanup Program

Date of Government Version: 06/20/2006
Date Data Arrived at EDR: 06/21/2006
Date Made Active in Reports: 07/12/2006
Number of Days to Update: 21

Source: Department of Environmental Protection
Telephone: 717-783-2388
Last EDR Contact: 06/19/2006
Next Scheduled EDR Contact: 08/14/2006
Data Release Frequency: Semi-Annually

DRYCLEANERS: Drycleaner Facility Locations
A listing of drycleaner facility locations.

Date of Government Version: 05/01/2006
Date Data Arrived at EDR: 05/01/2006
Date Made Active in Reports: 06/06/2006
Number of Days to Update: 36

Source: Department of Environmental Protection
Telephone: 717-787-9702
Last EDR Contact: 07/17/2006
Next Scheduled EDR Contact: 10/16/2006
Data Release Frequency: Varies

BROWNFIELDS: Brownfields Sites

Date of Government Version: 06/20/2006
Date Data Arrived at EDR: 06/21/2006
Date Made Active in Reports: 07/12/2006
Number of Days to Update: 21

Source: Department of Environmental Protection
Telephone: 717-783-7509
Last EDR Contact: 06/19/2006
Next Scheduled EDR Contact: 08/14/2006
Data Release Frequency: Varies

AIRS: Permit and Emissions Inventory Data
Permit and emissions inventory data.

Date of Government Version: 12/31/2004
Date Data Arrived at EDR: 05/03/2006
Date Made Active in Reports: 06/06/2006
Number of Days to Update: 34

Source: Department of Environmental Protection
Telephone: 717-787-9702
Last EDR Contact: 04/07/2006
Next Scheduled EDR Contact: 07/24/2006
Data Release Frequency: Annually

TRIBAL RECORDS

INDIAN RESERV: Indian Reservations
This map layer portrays Indian administered lands of the United States that have any area equal to or greater than 640 acres.

Date of Government Version: 12/31/2004
Date Data Arrived at EDR: 02/08/2005
Date Made Active in Reports: 08/04/2005
Number of Days to Update: 177

Source: USGS
Telephone: 202-208-3710
Last EDR Contact: 05/12/2006
Next Scheduled EDR Contact: 08/07/2006
Data Release Frequency: Semi-Annually

EDR PROPRIETARY RECORDS

Manufactured Gas Plants: EDR Proprietary Manufactured Gas Plants
The EDR Proprietary Manufactured Gas Plant Database includes records of coal gas plants (manufactured gas plants) compiled by EDR's researchers. Manufactured gas sites were used in the United States from the 1800's to 1950's to produce a gas that could be distributed and used as fuel. These plants used whale oil, rosin, coal, or a mixture of coal, oil, and water that also produced a significant amount of waste. Many of the byproducts of the gas production, such as coal tar (oily waste containing volatile and non-volatile chemicals), sludges, oils and other compounds are potentially hazardous to human health and the environment. The byproduct from this process was frequently disposed of directly at the plant site and can remain or spread slowly, serving as a continuous source of soil and groundwater contamination.

Date of Government Version: N/A
Date Data Arrived at EDR: N/A
Date Made Active in Reports: N/A
Number of Days to Update: N/A

Source: EDR, Inc.
Telephone: N/A
Last EDR Contact: N/A
Next Scheduled EDR Contact: N/A
Data Release Frequency: No Update Planned

EDR Historical Auto Stations: EDR Proprietary Historic Gas Stations

EDR has searched selected national collections of business directories and has collected listings of potential gas station/filling station/service station sites that were available to EDR researchers. EDR's review was limited to those categories of sources that might, in EDR's opinion, include gas station/filling station/service station establishments. The categories reviewed included, but were not limited to gas, gas station, gasoline station, filling station, auto, automobile repair, auto service station, service station, etc.

Date of Government Version: N/A
Date Data Arrived at EDR: N/A
Date Made Active in Reports: N/A
Number of Days to Update: N/A

Source: EDR, Inc.
Telephone: N/A
Last EDR Contact: N/A
Next Scheduled EDR Contact: N/A
Data Release Frequency: Varies

EDR Historical Cleaners: EDR Proprietary Historic Dry Cleaners

EDR has searched selected national collections of business directories and has collected listings of potential dry cleaner sites that were available to EDR researchers. EDR's review was limited to those categories of sources that might, in EDR's opinion, include dry cleaning establishments. The categories reviewed included, but were not limited to dry cleaners, cleaners, laundry, laundromat, cleaning/laundry, wash & dry etc.

Date of Government Version: N/A
Date Data Arrived at EDR: N/A
Date Made Active in Reports: N/A
Number of Days to Update: N/A

Source: EDR, Inc.
Telephone: N/A
Last EDR Contact: N/A
Next Scheduled EDR Contact: N/A
Data Release Frequency: Varies

OTHER DATABASE(S)

Depending on the geographic area covered by this report, the data provided in these specialty databases may or may not be complete. For example, the existence of wetlands information data in a specific report does not mean that all wetlands in the area covered by the report are included. Moreover, the absence of any reported wetlands information does not necessarily mean that wetlands do not exist in the area covered by the report.

CT MANIFEST: Hazardous Waste Manifest Data

Facility and manifest data. Manifest is a document that lists and tracks hazardous waste from the generator through transporters to a tsd facility.

Date of Government Version: 12/31/2004
Date Data Arrived at EDR: 02/17/2006
Date Made Active in Reports: 04/07/2006
Number of Days to Update: 49

Source: Department of Environmental Protection
Telephone: 860-424-3375
Last EDR Contact: 06/14/2006
Next Scheduled EDR Contact: 09/11/2006
Data Release Frequency: Annually

NJ MANIFEST: Manifest Information

Hazardous waste manifest information.

Date of Government Version: 12/31/2004
Date Data Arrived at EDR: 04/24/2006
Date Made Active in Reports: 05/02/2006
Number of Days to Update: 8

Source: Department of Environmental Protection
Telephone: N/A
Last EDR Contact: 07/05/2006
Next Scheduled EDR Contact: 10/02/2006
Data Release Frequency: Annually

NY MANIFEST: Facility and Manifest Data
Manifest is a document that lists and tracks hazardous waste from the generator through transporters to a TSD facility.

Date of Government Version: 05/02/2006
Date Data Arrived at EDR: 05/31/2006
Date Made Active in Reports: 06/27/2006
Number of Days to Update: 27

Source: Department of Environmental Conservation
Telephone: 518-402-8651
Last EDR Contact: 05/31/2006
Next Scheduled EDR Contact: 08/28/2006
Data Release Frequency: Annually

RI MANIFEST: Manifest information
Hazardous waste manifest information

Date of Government Version: 09/30/2005
Date Data Arrived at EDR: 05/09/2006
Date Made Active in Reports: 05/24/2006
Number of Days to Update: 15

Source: Department of Environmental Management
Telephone: 401-222-2797
Last EDR Contact: 06/19/2006
Next Scheduled EDR Contact: 09/18/2006
Data Release Frequency: Annually

VT MANIFEST: Hazardous Waste Manifest Data
Hazardous waste manifest information.

Date of Government Version: 12/31/2004
Date Data Arrived at EDR: 03/17/2006
Date Made Active in Reports: 05/17/2006
Number of Days to Update: 61

Source: Department of Environmental Conservation
Telephone: 802-241-3443
Last EDR Contact: 05/15/2006
Next Scheduled EDR Contact: 08/14/2006
Data Release Frequency: Annually

WI MANIFEST: Manifest Information
Hazardous waste manifest information.

Date of Government Version: 12/31/2005
Date Data Arrived at EDR: 03/17/2006
Date Made Active in Reports: 05/02/2006
Number of Days to Update: 46

Source: Department of Natural Resources
Telephone: N/A
Last EDR Contact: 07/11/2006
Next Scheduled EDR Contact: 10/09/2006
Data Release Frequency: Annually

Oil/Gas Pipelines: This data was obtained by EDR from the USGS in 1994. It is referred to by USGS as GeoData Digital Line Graphs from 1:100,000-Scale Maps. It was extracted from the transportation category including some oil, but primarily gas pipelines.

Electric Power Transmission Line Data
Source: PennWell Corporation
Telephone: (800) 823-6277
This map includes information copyrighted by PennWell Corporation. This information is provided on a best effort basis and PennWell Corporation does not guarantee its accuracy nor warrant its fitness for any particular purpose. Such information has been reprinted with the permission of PennWell.

Sensitive Receptors: There are individuals deemed sensitive receptors due to their fragile immune systems and special sensitivity to environmental discharges. These sensitive receptors typically include the elderly, the sick, and children. While the location of all sensitive receptors cannot be determined, EDR indicates those buildings and facilities - schools, daycares, hospitals, medical centers, and nursing homes - where individuals who are sensitive receptors are likely to be located.

AHA Hospitals:
Source: American Hospital Association, Inc.
Telephone: 312-280-5991
The database includes a listing of hospitals based on the American Hospital Association's annual survey of hospitals.

Medical Centers: Provider of Services Listing
Source: Centers for Medicare & Medicaid Services
Telephone: 410-786-3000
A listing of hospitals with Medicare provider number, produced by Centers of Medicare & Medicaid Services, a federal agency within the U.S. Department of Health and Human Services.

Nursing Homes
Source: National Institutes of Health
Telephone: 301-594-6248
Information on Medicare and Medicaid certified nursing homes in the United States.

Public Schools
Source: National Center for Education Statistics
Telephone: 202-502-7300
The National Center for Education Statistics' primary database on elementary and secondary public education in the United States. It is a comprehensive, annual, national statistical database of all public elementary and secondary schools and school districts, which contains data that are comparable across all states.

Private Schools
Source: National Center for Education Statistics
Telephone: 202-502-7300
The National Center for Education Statistics' primary database on private school locations in the United States.

Daycare Centers: Child Care Facility List
Source: Department of Public Welfare
Telephone: 717-783-3856

Flood Zone Data: This data, available in select counties across the country, was obtained by EDR in 1999 from the Federal Emergency Management Agency (FEMA). Data depicts 100-year and 500-year flood zones as defined by FEMA.

NWI: National Wetlands Inventory. This data, available in select counties across the country, was obtained by EDR in 2002 and 2005 from the U.S. Fish and Wildlife Service.

Scanned Digital USGS 7.5' Topographic Map (DRG)
Source: United States Geologic Survey
A digital raster graphic (DRG) is a scanned image of a U.S. Geological Survey topographic map. The map images are made by scanning published paper maps on high-resolution scanners. The raster image is georeferenced and fit to the Universal Transverse Mercator (UTM) projection.

STREET AND ADDRESS INFORMATION

© 2006 Tele Atlas North America, Inc. All rights reserved. This material is proprietary and the subject of copyright protection and other intellectual property rights owned by or licensed to Tele Atlas North America, Inc. The use of this material is subject to the terms of a license agreement. You will be held liable for any unauthorized copying or disclosure of this material.

GEOCHECK ®- PHYSICAL SETTING SOURCE ADDENDUM

TARGET PROPERTY ADDRESS

WILKES-BARRE USARC, PA
1001 HIGHWAY 315 S
WILKES BARRE, PA 18702

TARGET PROPERTY COORDINATES

Latitude (North):	41.251502 - 41˚ 15’ 5.4’’
Longitude (West):	75.829691 - 75˚ 49’ 46.9’’
Universal Tranverse Mercator:	Zone 18
UTM X (Meters):	430485.4
UTM Y (Meters):	4566796.5
Elevation:	815 ft. above sea level

USGS TOPOGRAPHIC MAP

Target Property Map:	41075-C7 PITTSTON, PA
Most Recent Revision:	1999
South Map:	41075-B7 WILKES-BARRE EAST, PA
Most Recent Revision:	1999

EDR’s GeoCheck Physical Setting Source Addendum is provided to assist the environmental professional in forming an opinion about the impact of potential contaminant migration.

Assessment of the impact of contaminant migration generally has two principle investigative components:

1. Groundwater flow direction, and
2. Groundwater flow velocity.

Groundwater flow direction may be impacted by surface topography, hydrology, hydrogeology, characteristics of the soil, and nearby wells. Groundwater flow velocity is generally impacted by the nature of the geologic strata.

GEOCHECK® - PHYSICAL SETTING SOURCE SUMMARY

GROUNDWATER FLOW DIRECTION INFORMATION

Groundwater flow direction for a particular site is best determined by a qualified environmental professional using site-specific well data. If such data is not reasonably ascertainable, it may be necessary to rely on other sources of information, such as surface topographic information, hydrologic information, hydrogeologic data collected on nearby properties, and regional groundwater flow information (from deep aquifers).

TOPOGRAPHIC INFORMATION

Surface topography may be indicative of the direction of surficial groundwater flow. This information can be used to assist the environmental professional in forming an opinion about the impact of nearby contaminated properties or, should contamination exist on the target property, what downgradient sites might be impacted.

TARGET PROPERTY TOPOGRAPHY

General Topographic Gradient: General NNW

SURROUNDING TOPOGRAPHY: ELEVATION PROFILES

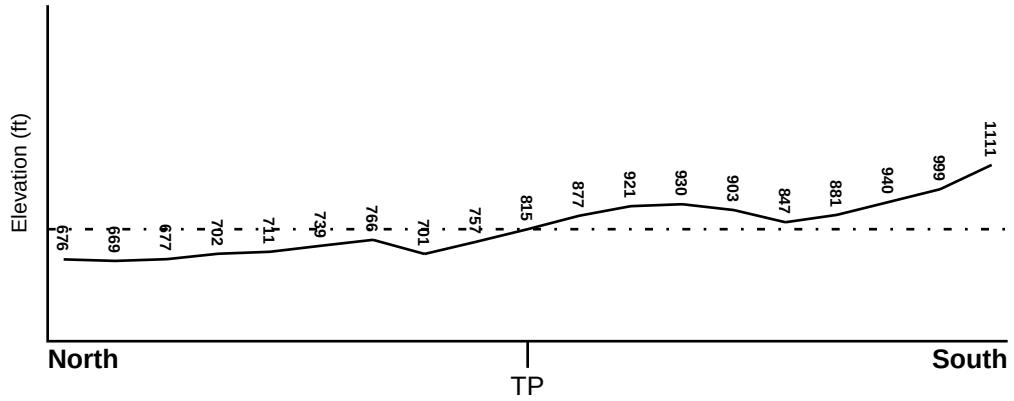

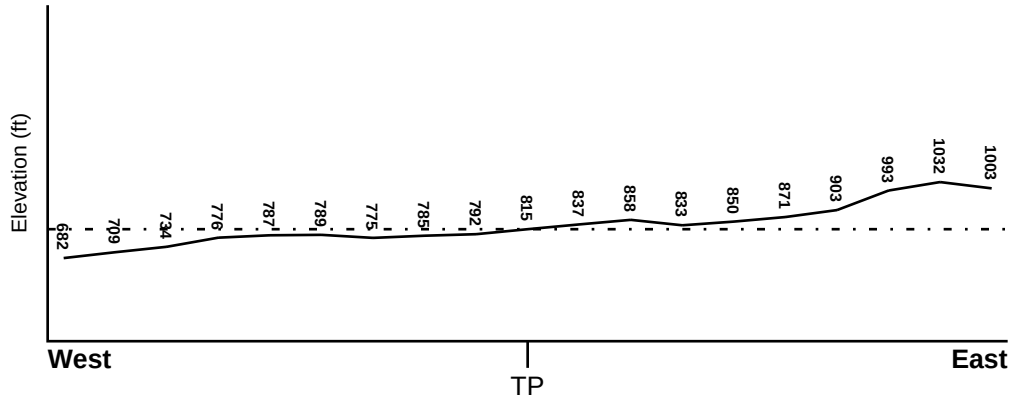

Target Property Elevation: 815 ft.

0 1/2 1 Miles

Source: Topography has been determined from the USGS 7.5' Digital Elevation Model and should be evaluated on a relative (not an absolute) basis. Relative elevation information between sites of close proximity should be field verified.

GEOCHECK® - PHYSICAL SETTING SOURCE SUMMARY

HYDROLOGIC INFORMATION

Surface water can act as a hydrologic barrier to groundwater flow. Such hydrologic information can be used to assist the environmental professional in forming an opinion about the impact of nearby contaminated properties or, should contamination exist on the target property, what downgradient sites might be impacted.

Refer to the Physical Setting Source Map following this summary for hydrologic information (major waterways and bodies of water).

FEMA FLOOD ZONE

Target Property County	FEMA Flood Electronic Data
LUZERNE, PA	YES - refer to the Overview Map and Detail Map

Flood Plain Panel at Target Property:	4206210001B
Additional Panels in search area:	4206210002B 4206310002D 4218230005A 4218180001B

NATIONAL WETLAND INVENTORY

NWI Quad at Target Property	NWI Electronic Data Coverage
PITTSTON	YES - refer to the Overview Map and Detail Map

HYDROGEOLOGIC INFORMATION

Hydrogeologic information obtained by installation of wells on a specific site can often be an indicator of groundwater flow direction in the immediate area. Such hydrogeologic information can be used to assist the environmental professional in forming an opinion about the impact of nearby contaminated properties or, should contamination exist on the target property, what downgradient sites might be impacted.

AQUIFLOW®

Search Radius: 1.000 Mile.

EDR has developed the AQUIFLOW Information System to provide data on the general direction of groundwater flow at specific points. EDR has reviewed reports submitted by environmental professionals to regulatory authorities at select sites and has extracted the date of the report, groundwater flow direction as determined hydrogeologically, and the depth to water table.

MAP ID	LOCATION FROM TP	GENERAL DIRECTION GROUNDWATER FLOW
Not Reported		

GEOCHECK® - PHYSICAL SETTING SOURCE SUMMARY

GROUNDWATER FLOW VELOCITY INFORMATION

Groundwater flow velocity information for a particular site is best determined by a qualified environmental professional using site specific geologic and soil strata data. If such data are not reasonably ascertainable, it may be necessary to rely on other sources of information, including geologic age identification, rock stratigraphic unit and soil characteristics data collected on nearby properties and regional soil information. In general, contaminant plumes move more quickly through sandy-gravelly types of soils than silty-clayey types of soils.

GEOLOGIC INFORMATION IN GENERAL AREA OF TARGET PROPERTY

Geologic information can be used by the environmental professional in forming an opinion about the relative speed at which contaminant migration may be occurring.

ROCK STRATIGRAPHIC UNIT

Era:	Paleozoic
System:	Pennsylvanian
Series:	Atokan and Morrowan Series
Code:	PP1 *(decoded above as Era, System & Series)*

GEOLOGIC AGE IDENTIFICATION

Category: Stratifed Sequence

Geologic Age and Rock Stratigraphic Unit Source: P.G. Schruben, R.E. Arndt and W.J. Bawiec, Geology of the Conterminous U.S. at 1:2,500,000 Scale - a digital representation of the 1974 P.B. King and H.M. Beikman Map, USGS Digital Data Series DDS - 11 (1994).

DOMINANT SOIL COMPOSITION IN GENERAL AREA OF TARGET PROPERTY

The U.S. Department of Agriculture's (USDA) Soil Conservation Service (SCS) leads the National Cooperative Soil Survey (NCSS) and is responsible for collecting, storing, maintaining and distributing soil survey information for privately owned lands in the United States. A soil map in a soil survey is a representation of soil patterns in a landscape. Soil maps for STATSGO are compiled by generalizing more detailed (SSURGO) soil survey maps. The following information is based on Soil Conservation Service STATSGO data.

Soil Component Name:	UDORTHENTS
Soil Surface Texture:	very channery - sandy loam
Hydrologic Group:	Class B/D - Drained/undrained hydrology class of soils that can be drained and are classified.
Soil Drainage Class:	Not reported

Hydric Status: Soil does not meet the requirements for a hydric soil.

Corrosion Potential - Uncoated Steel:	HIGH
Depth to Bedrock Min:	> 20 inches
Depth to Bedrock Max:	> 60 inches

GEOCHECK® - PHYSICAL SETTING SOURCE SUMMARY

Soil Layer Information							
	Boundary			Classification			
Layer	Upper	Lower	Soil Texture Class	AASHTO Group	Unified Soil	Permeability Rate (in/hr)	Soil Reaction (pH)
1	0 inches	6 inches	very channery - sandy loam	Granular materials (35 pct. or less passing No. 200), Stone Fragments, Gravel and Sand.	COARSE-GRAINED SOILS, Gravels, Gravels with fines, Clayey Gravel	Max: 6.00 Min: 0.20	Max: 8.40 Min: 4.50
2	6 inches	60 inches	very shaly - silt loam	Granular materials (35 pct. or less passing No. 200), Stone Fragments, Gravel and Sand.	COARSE-GRAINED SOILIS, Gravels, Clean Gravels, Well-graded gravel. COARSE-GRAINED SOILS, Gravels, Gravels with fines, Silty Gravel.	Max: 20.00 Min: 0.06	Max: 8.40 Min: 4.50

OTHER SOIL TYPES IN AREA

Based on Soil Conservation Service STATSGO data, the following additional subordinant soil types may appear within the general area of target property.

Soil Surface Textures: channery - silt loam
extremely stony - loam
extremely stony - sandy loam
gravelly - fine sandy loam
very stony - loam
very stony - silt loam
gravelly - sandy loam
gravelly - loam

Surficial Soil Types: channery - silt loam
extremely stony - loam
extremely stony - sandy loam
gravelly - fine sandy loam
very stony - loam
very stony - silt loam
gravelly - sandy loam
gravelly - loam

Shallow Soil Types: channery - sandy loam

Deeper Soil Types: very channery - loam
gravelly - loam
fine sandy loam
unweathered bedrock
loam
very gravelly - loamy coarse sand

GEOCHECK® - PHYSICAL SETTING SOURCE SUMMARY

LOCAL / REGIONAL WATER AGENCY RECORDS

EDR Local/Regional Water Agency records provide water well information to assist the environmental professional in assessing sources that may impact ground water flow direction, and in forming an opinion about the impact of contaminant migration on nearby drinking water wells.

WELL SEARCH DISTANCE INFORMATION

DATABASE	SEARCH DISTANCE (miles)
Federal USGS	1.000
Federal FRDS PWS	Nearest PWS within 1 mile
State Database	1.000

FEDERAL USGS WELL INFORMATION

MAP ID	WELL ID	LOCATION FROM TP
No Wells Found		

FEDERAL FRDS PUBLIC WATER SUPPLY SYSTEM INFORMATION

MAP ID	WELL ID	LOCATION FROM TP
No PWS System Found		

Note: PWS System location is not always the same as well location.

STATE DATABASE WELL INFORMATION

MAP ID	WELL ID	LOCATION FROM TP
No Wells Found		

PHYSICAL SETTING SOURCE MAP - 01714247.242r

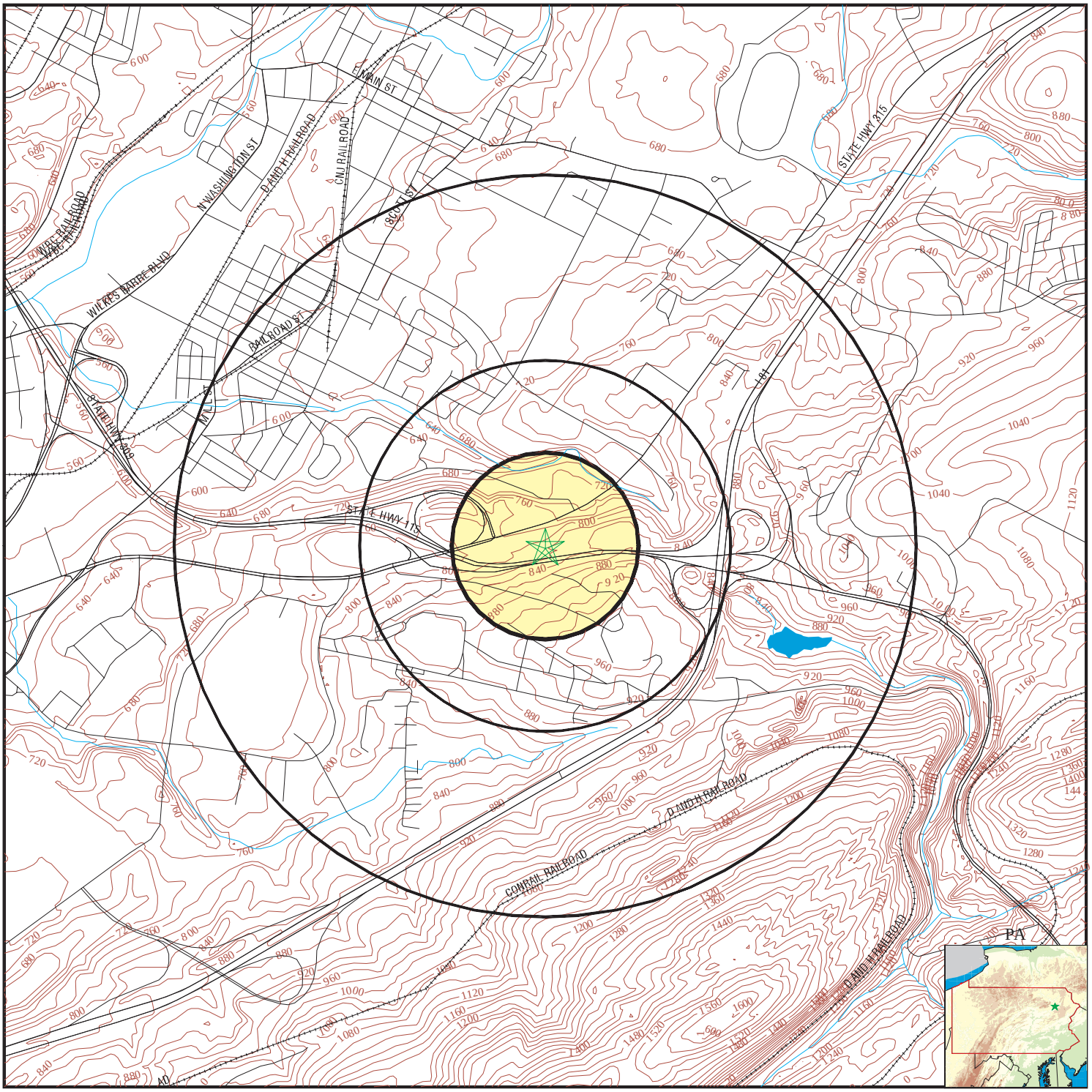

County Boundary
Major Roads
Contour Lines
Earthquake epicenter, Richter 5 or greater
Water Wells
Public Water Supply Wells
Cluster of Multiple Icons

0 1/4 1/2 1 Miles

Groundwater Flow Direction
GI Indeterminate Groundwater Flow at Location
GV Groundwater Flow Varies at Location

N

SITE NAME: Wilkes-Barre USARC, PA	CLIENT: CH2M Hill
ADDRESS: 1001 HIGHWAY 315 S WILKES BARRE PA 18702	CONTACT: Mary Beth Jacques
LAT/LONG: 41.2515 / 75.8297	INQUIRY #: 01714247.242r
	DATE: July 19, 2006

Copyright © 2006 EDR, Inc. © 2006 Tele Atlas Rel. 07/2005.

GEOCHECK® - PHYSICAL SETTING SOURCE MAP FINDINGS
RADON

AREA RADON INFORMATION

State Database: PA Radon

Test Result Statistics

Zip	Total Sites	Min pCi/L	Max pCi/L	Avg pCi/L
18702	481	.1	32.1	2.9

EPA Region 3 Statistical Summary Readings for Zip Code: 18702

Number of sites tested: 457.

Maximum Radon Level: 43.0 pCi/L.
Minimum Radon Level: 0.4 pCi/L.

pCi/L <4	pCi/L 4-10	pCi/L 10-20	pCi/L 20-50	pCi/L 50-100	pCi/L >100
378 (82.71%)	61 (13.35%)	14 (3.06%)	4 (0.88%)	0 (0.00%)	0 (0.00%)

Federal EPA Radon Zone for LUZERNE County: 1

Note: Zone 1 indoor average level > 4 pCi/L.
: Zone 2 indoor average level >= 2 pCi/L and <= 4 pCi/L.
: Zone 3 indoor average level < 2 pCi/L.

PHYSICAL SETTING SOURCE RECORDS SEARCHED

TOPOGRAPHIC INFORMATION

USGS 7.5' Digital Elevation Model (DEM)
Source: United States Geologic Survey
EDR acquired the USGS 7.5' Digital Elevation Model in 2002 and updated it in 2006. The 7.5 minute DEM corresponds to the USGS 1:24,000- and 1:25,000-scale topographic quadrangle maps. The DEM provides elevation data with consistent elevation units and projection.

Scanned Digital USGS 7.5' Topographic Map (DRG)
Source: United States Geologic Survey
A digital raster graphic (DRG) is a scanned image of a U.S. Geological Survey topographic map. The map images are made by scanning published paper maps on high-resolution scanners. The raster image is georeferenced and fit to the Universal Transverse Mercator (UTM) projection.

HYDROLOGIC INFORMATION

Flood Zone Data: This data, available in select counties across the country, was obtained by EDR in 1999 from the Federal Emergency Management Agency (FEMA). Data depicts 100-year and 500-year flood zones as defined by FEMA.

NWI: National Wetlands Inventory. This data, available in select counties across the country, was obtained by EDR in 2002 and 2005 from the U.S. Fish and Wildlife Service.

HYDROGEOLOGIC INFORMATION

AQUIFLOW[R] Information System
Source: EDR proprietary database of groundwater flow information
EDR has developed the AQUIFLOW Information System (AIS) to provide data on the general direction of groundwater flow at specific points. EDR has reviewed reports submitted to regulatory authorities at select sites and has extracted the date of the report, hydrogeologically determined groundwater flow direction and depth to water table information.

GEOLOGIC INFORMATION

Geologic Age and Rock Stratigraphic Unit
Source: P.G. Schruben, R.E. Arndt and W.J. Bawiec, Geology of the Conterminous U.S. at 1:2,500,000 Scale - A digital representation of the 1974 P.B. King and H.M. Beikman Map, USGS Digital Data Series DDS - 11 (1994).

STATSGO: State Soil Geographic Database
Source: Department of Agriculture, Natural Resources Conservation Services
The U.S. Department of Agriculture's (USDA) Natural Resources Conservation Service (NRCS) leads the national Conservation Soil Survey (NCSS) and is responsible for collecting, storing, maintaining and distributing soil survey information for privately owned lands in the United States. A soil map in a soil survey is a representation of soil patterns in a landscape. Soil maps for STATSGO are compiled by generalizing more detailed (SSURGO) soil survey maps.

SSURGO: Soil Survey Geographic Database
Source: Department of Agriculture, Natural Resources Conservation Services (NRCS)
Telephone: 800-672-5559
SSURGO is the most detailed level of mapping done by the Natural Resources Conservation Services, mapping scales generally range from 1:12,000 to 1:63,360. Field mapping methods using national standards are used to construct the soil maps in the Soil Survey Geographic (SSURGO) database. SSURGO digitizing duplicates the original soil survey maps. This level of mapping is designed for use by landowners, townships and county natural resource planning and management.

PHYSICAL SETTING SOURCE RECORDS SEARCHED

LOCAL / REGIONAL WATER AGENCY RECORDS

FEDERAL WATER WELLS

PWS: Public Water Systems
Source: EPA/Office of Drinking Water
Telephone: 202-564-3750
Public Water System data from the Federal Reporting Data System. A PWS is any water system which provides water to at least 25 people for at least 60 days annually. PWSs provide water from wells, rivers and other sources.

PWS ENF: Public Water Systems Violation and Enforcement Data
Source: EPA/Office of Drinking Water
Telephone: 202-564-3750
Violation and Enforcement data for Public Water Systems from the Safe Drinking Water Information System (SDWIS) after August 1995. Prior to August 1995, the data came from the Federal Reporting Data System (FRDS).

USGS Water Wells: USGS National Water Inventory System (NWIS)
This database contains descriptive information on sites where the USGS collects or has collected data on surface water and/or groundwater. The groundwater data includes information on wells, springs, and other sources of groundwater.

STATE RECORDS

Pennsylvania Public Water Supply Wells
Source: Pennsylvania Department of Environmental Resources Bureau of Water Supply
Telephone: 717-787-5017

Pennsylvania Groundwater Information System
Source: Department of Conservation and Natural Resources
Telephone: 717-783-7258

OTHER STATE DATABASE INFORMATION

RADON

State Database: PA Radon
Source: Department of Environmental Protection
Telephone: 717-783-3594
Radon Test Results Statistics by Zip Code

Area Radon Information
Source: USGS
Telephone: 703-356-4020
The National Radon Database has been developed by the U.S. Environmental Protection Agency (USEPA) and is a compilation of the EPA/State Residential Radon Survey and the National Residential Radon Survey. The study covers the years 1986 - 1992. Where necessary data has been supplemented by information collected at private sources such as universities and research institutions.

EPA Radon Zones
Source: EPA
Telephone: 703-356-4020
Sections 307 & 309 of IRAA directed EPA to list and identify areas of U.S. with the potential for elevated indoor radon levels.

EPA Region 3 Statistical Summary Readings
Source: Region 3 EPA
Telephone: 215-814-2082
Radon readings for Delaware, D.C., Maryland, Pennsylvania, Virginia and West Virginia.

PHYSICAL SETTING SOURCE RECORDS SEARCHED

OTHER

Airport Landing Facilities: Private and public use landing facilities
Source: Federal Aviation Administration, 800-457-6656

Epicenters: World earthquake epicenters, Richter 5 or greater
Source: Department of Commerce, National Oceanic and Atmospheric Administration

STREET AND ADDRESS INFORMATION

© 2006 Tele Atlas North America, Inc. All rights reserved. This material is proprietary and the subject of copyright protection and other intellectual property rights owned by or licensed to Tele Atlas North America, Inc. The use of this material is subject to the terms of a license agreement. You will be held liable for any unauthorized copying or disclosure of this material.

Fax To: CH2M Hill
Contact: Mary Beth Jacques
Fax : 404-229-9152
Date: 07/19/2006

Fax From: Bart Sobieralski
EDR
Phone: 1-800-352-0050

EDR PUR-IQ® Report

"the intelligent way to conduct historical research"

for
Wilkes-Barre USARC, PA
1001 HIGHWAY 315 S
WILKES BARRE, PA 18702
Lat./Long. 41.251502 / 75.829691
EDR Inquiry # 01714247.242r

The EDR PUR-IQ report facilitates historical research planning required to complete the Phase I ESA process. The report identifies the *likelihood* of prior use coverage by searching proprietary EDR-Prior Use Reports® comprising nationwide information on: city directories, fire insurance maps, aerial photographs, historical topographic maps, flood maps and National Wetland Inventory maps.

Potential for EDR Historical (Prior Use) Coverage - Coverage in the following historical information sources may be used as a guide to develop your historical research strategy:

1. City Directory: Coverage may exist for portions of Luzerne County, PA.

2. Fire Insurance Map: When you order online any EDR Package or the EDR Radius Map with EDR Sanborn Map Search/Print, you receive site specific Sanborn Map coverage information at no charge.

3. Aerial Photograph: Aerial photography coverage may exist for portions of Luzerne County. Please contact your EDR Account Executive for information about USGS photos available through EDR.

4. Topographic Map: The USGS 7.5 min. quad topo sheet(s) associated with this site:

Historical: Coverage exists for Luzerne County

Current: Target Property: TP | 1999 | 41075-C7 Pittston, PA

Additional required for 1 Mile radius: S | 1999 | 41075-B7 Wilkes-Barre East, PA

EDR's network of professional researchers, located throughout the United States, accesses the most extensive national collections of city directory, fire insurance maps, aerial photographs and historical topographic map resources available for WILKES BARRE, PA. These collections may be located in multiple libraries throughout the country. To ensure maximum coverage, EDR will often assign researchers at these multiple locations on your behalf. Please call or fax your EDR representative to authorize a search.

EDR™ Environmental Data Resources Inc

EDR - HISTORICAL SOURCE(S) ORDER FORM

CH2M Hill
Mary Beth Jacques
Account # 1592163

Wilkes-Barre USARC, PA
1001 HIGHWAY 315 S
WILKES BARRE, PA 18702
Luzerne County
Lat./Long. 41.251502 / 75.829691
EDR Inquiry # 01714247.242r

Should you wish to change or add to your order, fax this form to your EDR account executive:

Bart Sobieralski
Ph: 1-800-352-0050 Fax: 1-800-231-6802

Reports

___ EDR Sanborn Map® Search/Print

___ EDR Fire Insurance Map Abstract

___ EDR Multi-Tenant Retail Facility® Report

___ EDR City Directory Abstract

___ EDR Aerial Photo Decade Package

___ USGS Aerial 5 Package

___ USGS Aerial 3 Package

___ EDR Historical Topographic Maps

___ Paper Current USGS Topo (7.5 min.)

___ Environmental Lien Search

___ Chain of Title Search

___ NJ MacRaes Industrial Directory Report

___ EDR Telephone Interview

Shipping:

___ Email
___ Express, Next Day Delivery — RUSH SERVICE IS AVAILABLE
___ Express, Second Day Delivery
___ Express, Next day Delivery — Customer Account — Acct # _____
___ Express, Second Day Delivery — Customer Account — Acct # _____
___ U.S. Mail

Thank you

"Linking Technology with Tradition"®

Sanborn® Map Report

Ship To: Mary Beth Jacques
CH2M Hill
1569 Stampmill Way
Lawrenceville, GA 30043

Order Date: 7/12/2006 **Completion Date:** 7/19/2006
Inquiry #: 1714247.243s
P.O. #: NA
Site Name: Wilkes-Barre USARC PA
Address: 1001 HIGHWAY 315 S
City/State: WILKES BARRE, PA 18702
Cross Streets:

Customer Project: NA
1592163BAS 770-338-1589

This document reports that the largest and most complete collection of Sanborn fire insurance maps has been reviewed based on client supplied information, and fire insurance maps depicting the target property at the specified address were not identified.

NO COVERAGE

This Report contains certain information obtained from a variety of public and other sources reasonably available to Environmental Data Resources, Inc. It cannot be concluded from this Report that coverage information for the target and surrounding properties does not exist from other sources. NO WARRANTY EXPRESSED OR IMPLIED, IS MADE WHATSOEVER IN CONNECTION WITH THIS REPORT. ENVIRONMENTAL DATA RESOURCES, INC. SPECIFICALLY DISCLAIMS THE MAKING OF ANY SUCH WARRANTIES, INCLUDING WITHOUT LIMITATION, MERCHANTABILITY OR FITNESS FOR A PARTICULAR USE OR PURPOSE. ALL RISK IS ASSUMED BY THE USER. IN NO EVENT SHALL ENVIRONMENTAL DATA RESOURCES, INC. BE LIABLE TO ANYONE, WHETHER ARISING OUT OF ERRORS OR OMISSIONS, NEGLIGENCE, ACCIDENT OR ANY OTHER CAUSE, FOR ANY LOSS OF DAMAGE, INCLUDING, WITHOUT LIMITATION, SPECIAL, INCIDENTAL, CONSEQUENTIAL, OR EXEMPLARY DAMAGES. ANY LIABILITY ON THE PART OF ENVIRONMENTAL DATA RESOURCES, INC. IS STRICTLY LIMITED TO A REFUND OF THE AMOUNT PAID FOR THIS REPORT. Purchaser accepts this Report AS IS. Any analyses, estimates, ratings, environmental risk levels or risk codes provided in this Report are provided for illustrative purposes only, and are not intended to provide, nor should they be interpreted as providing any facts regarding, or prediction or forecast of, any environmental risk for any property. Only a Phase I Environmental Site Assessment performed by an environmental professional can provide information regarding the environmental risk for any property. Additionally, the information provided in this Report is not to be construed as legal advice.

Copyright 2006 by Environmental Data Resources, Inc. All rights reserved. Reproduction in any media or format, in whole or in part, of any report or map of Environmental Data Resources, Inc., or its affiliates, is prohibited without prior written permission. EDR and its logos (including Sanborn and Sanborn Map) are trademarks of Environmental Data Resources, Inc. or its affiliates. All other trademarks used herein are the property of their respective owners.

EDR Site Report™

JACK WILLIAMS TIRE
RT 315
PLAINS TOWNSHIP, PA 18705

Inquiry Number:

September 24, 2006

EDR® Environmental Data Resources Inc

The Standard in Environmental Risk Management Information

440 Wheelers Farms Road
Milford, Connecticut 06461

Nationwide Customer Service

Telephone: 1-800-352-0050
Fax: 1-800-231-6802
Internet: www.edrnet.com

TABLE OF CONTENTS

The EDR-Site Report™ is a comprehensive presentation of government filings on a facility identified in a search of over 4 million government records from more than 600 federal, state and local environmental databases. The report is divided into three sections:

Section 1: Facility Summary . . . . . Page 3

Summary of facility filings including a review of the following areas: waste management, waste disposal, multi-media issues, and Superfund liability.

Section 2: Facility Detail Reports . . . . . Page 4

All available detailed information from databases where sites are identified.

Section 3: Databases Searched and Update Information. . . . . Page 6

Name, source, update dates, contact phone number and description of each of the databases searched for this report.

Thank you for your business.
Please contact EDR at 1-800-352-0050
with any questions or comments.

Disclaimer - Copyright and Trademark Notice

This report contains information obtained from a variety of public and other sources reasonably available to Environmental Data Resources , Inc. It cannot be concluded from this Report that coverage information for the target and surrounding properties does not exist from other sources. **NO WARRANTY EXPRESSED OR IMPLIED, IS MADE WHATSOEVER IN CONNECTION WITH THIS REPORT. ENVIRONMENTAL DATA RESOURCES, INC. SPECIFICALLY DISCLAIMS THE MAKING OF ANYSUCH WARRANTIES, INCLUDING WITHOUT LIMITATION, MERCHANTABILITY OR FITNESS FOR A PARTICULAR USE OR PURPOSE. ALL RISK IS ASSUMED BY THE USER. IN NO EVENT SHALL ENVIRONMENTAL DATA RESOURCES, INC. BE LIABLE TO ANYONE, WHETHER ARISING OUT OF ERRORS OR OMISSIONS, NEGLIGENCE, ACCIDENT OR ANY OTHER CAUSE, FOR ANY LOSS OR DAMAGE, INCLUDING, WITHOUT LIMITATION, SPECIAL, INCIDENTAL, CONSEQUENTIAL, OR EXEMPLARY DAMAGES.ANY LIABILITY ON THE PART OF ENVIRONMENTAL DATA RESOURCES, INC. IS STRICTLY LIMITED TO A REFUND OF THE AMOUNT PAID FOR THIS REPORT.**Purchaser accepts this report "AS IS". Any analyses, estimates, ratings, or risk codes provided in this report are provided for illustrative purposes only, and are not intended to provide, nor should they be interpreted as providing any facts regarding, or prediction or forecast of, any environmental risk for any property. Only a Phase I Environmental Site Assesment performed by an environmental professional can produce information regarding the environmental risk for any property. Additionally, the information provided in this Report is not to be construed as legal advice.

Copyright 2006 by Environmental Data Resources, Inc. All rights reserved. Reproduction in any media or format, in whole or in part, of any report or map of Environmental Data Resources, Inc., or its affiliates, is prohibited without prior written permission.

EDR and its logos (including Sanborn and Sanborn Map) are trademarks of Environmental Data Resources, Inc. or its affiliates. All other trademarks used herein are the property of their respective owners.

SECTION 1: FACILITY SUMMARY

FACILITY AREA	FACILITY 1 **JACK WILLIAMS TIRE** RT 315 PLAINS TOWNSHIP, PA 18705 EDR ID #1000283910 EPA #PAD063408058
WASTE MANAGEMENT Facility generates hazardous waste (RCRA)	**YES - p4**
Facility treats, stores, or disposes of hazardous waste on-site (RCRA/TSDF)	NO
Facility has received Notices of Violations (RCRA/VIOL)	NO
Facility has been subject to RCRA administrative actions (RAATS)	NO
Facility has been subject to corrective actions (CORRACTS)	NO
Facility handles PCBs (PADS)	NO
Facility uses radioactive materials (MLTS)	NO
Facility manages registered aboveground storage tanks (AST)	NO
Facility manages registered underground storage tanks (UST)	NO
Facility has reported leaking underground storage tank incidents (LUST)	NO
Facility has reported emergency releases to the soil (ERNS)	NO
Facility has reported hazardous material incidents to DOT (HMIRS)	NO
WASTE DISPOSAL Facility is a Superfund Site (NPL)	NO
Facility has a known or suspect abandoned, inactive or uncontrolled hazardous waste site (CERCLIS)	NO
Facility has a reported Superfund Lien on it (LIENS)	NO
Facility is listed as a state hazardous waste site (SHWS)	NO
Facility has disposed of solid waste on-site (SWF/LF)	NO
MULTIMEDIA Facility uses toxic chemicals and has notified EPA under SARA Title III, Section 313 (TRIS)	NO
Facility produces pesticides and has notified EPA under Section 7 of FIFRA (SSTS)	NO
Facility manufactures or imports toxic chemicals on the TSCA list (TSCA)	NO
Facility has inspections under FIFRA, TSCA or EPCRA (FTTS)	NO
Facility is listed in EPA's index system (FINDS)	**YES - p5**
Facility is listed in a county/local unique database (LOCAL)	NO
POTENTIAL SUPERFUND LIABILITY Facility has a list of potentially responsible parties PRP	NO
TOTAL (YES)	2

SECTION 2: FACILITY DETAIL REPORTS

WASTE MANAGEMENT

Facility generates hazardous waste

DATABASE: Resource Conservation and Recovery Information (RCRAInfo)

JACK WILLIAMS TIRE
RT 315
PLAINS TOWNSHIP, PA 18705
EDR ID #1000283910

Facility Name:	WILLIAMS, JACK TIRE CO INC RT 315 PLAINS, PA 18705
Mailing Address:	PO BOX 1451 KINGSTON, PA 18704
Contact:	JACK WILLIAMS JR (717) 829-1991
EPA-ID:	PAD063408058
Classification:	Small Quantity Generator
Description:	Handler: - generates more than 100 and less than 1000 kg of hazardous waste during any calendar month and accumulates less than 6000 kg of hazardous waste at any time; or - generates 100 kg or less of hazardous waste during any calendar month, and accumulates more than 1000 kg of hazardous waste at any time
Legal Status:	Private
Owner:	WILLIAMS, JACK TIRE CO INC OWNERSTREET OWNERCITY, AK 21555 - 5121 (215) 555-1212

MULTIMEDIA

Facility is listed in EPA's index system

DATABASE: Facility Index System (FINDS)

JACK WILLIAMS TIRE
RT 315
PLAINS TOWNSHIP, PA 18705
EDR ID #1000283910

This site is listed in the Federal FINDS database. The FINDS database may contain references to records from government databases included elsewhere in the report.
Please note: the FINDS database may also contain references to out of date records formerly associated with the site.

Registry ID:	110007765141
Facility Name:	JACK WILLIAMS TIRE
Facility Address:	RT 315 PLAINS TOWNSHIP, PA 18705
Facility County:	LUZERNE
EPA Region:	03
Fed. Gov. Facility:	No
Indian Tribal Land:	No

EPA Records Indicate Facility Is Listed In

PA-EFACTS (Pennsylvania - Environmental Facility Application Compliance Tracking System) is a Department-wide database that provides a holistic view of clients and sites (including facilities) that DEP regulates.

RCRAInfo is a national information system that supports the Resource Conservation and Recovery Act (RCRA) program through the tracking of events and activities related to facilities that generate, transport, and treat, store, or dispose of hazardous waste. RCRAInfo allows RCRA program staff to track the notification, permit, compliance, and corrective action activities required under RCRA.

Prg. Sys. ID:	508901
Supplemental Interest:	HAZARDOUS WASTE PROGRAM
Facility SIC Codes:	Not reported
Facility NAICS Codes:	Not reported

Prg. Sys. ID:	PAD063408058
Supplemental Interest:	Not reported
Facility SIC Codes:	Not reported
Facility NAICS Codes:	Not reported

SECTION 3: DATABASES SEARCHED AND UPDATE DATES

To maintain currency of the following federal, state and local databases, EDR contacts the appropriate government agency on a monthly or quarterly basis as required.

Elapsed ASTM days: Provides confirmation that this report meets or exceeds the 90-day updating requirement of the ASTM standard.

WASTE MANAGEMENT

RCRA: Resource Conservation and Recovery Act Information
Source: EPA
Telephone: 800-424-9346
RCRAInfo is EPA's comprehensive information system, providing access to data supporting the Resource Conservation and Recovery Act (RCRA) of 1976 and the Hazardous and Solid Waste Amendments (HSWA) of 1984. RCRAInfo replaces the data recording and reporting abilities of the Resource Conservation and Recovery Information System (RCRIS). The database includes selective information on sites which generate, transport, store, treat and/or dispose of hazardous waste as defined by the Resource Conservation and Recovery Act (RCRA). Conditionally exempt small quantity generators (CESQGs) generate less than 100 kg of hazardous waste, or less than 1 kg of acutely hazardous waste per month. Small quantity generators (SQGs) generate between 100 kg and 1,000 kg of hazardous waste per month. Large quantity generators (LQGs) generate over 1,000 kilograms (kg) of hazardous waste, or over 1 kg of acutely hazardous waste per month. Transporters are individuals or entities that move hazardous waste from the generator off-site to a facility that can recycle, treat, store, or dispose of the waste. TSDFs treat, store, or dispose of the waste.

Date of Government Version: 06/13/2006 — Date of Last EDR Contact: 09/15/2006
Database Release Frequency: Quarterly — Date of Next Scheduled Update: 11/20/2006

BRS: Biennial Reporting System
Source: EPA/NTIS
Telephone: 800-424-9346
The Biennial Reporting System is a national system administered by the EPA that collects data on the generation and management of hazardous waste. BRS captures detailed data from two groups: Large Quantity Generators (LQG) and Treatment, Storage, and Disposal Facilities.

Date of Government Version: 12/31/2003 — Date of Last EDR Contact: 09/15/2006
Database Release Frequency: Biennially — Date of Next Scheduled Update: 12/11/2006

RAATS: RCRA Administrative Action Tracking System
Source: EPA
Telephone: 202-564-4104
RCRA Administration Action Tracking System. RAATS contains records based on enforcement actions issued under RCRA pertaining to major violators and includes administrative and civil actions brought by the EPA. For administration actions after September 30, 1995, data entry in the RAATS database was discontinued. EPA will retain a copy of the database for historical records. It was necessary to terminate RAATS because a decrease in agency resources made it impossible to continue to update the information contained in the database.

Date of Government Version: 04/17/1995 — Date of Last EDR Contact: 09/05/2006
Database Release Frequency: No Update Planned — Date of Next Scheduled Update: 12/04/2006

CORRACTS: Corrective Action Report
Source: EPA
Telephone: 800-424-9346
CORRACTS identifies hazardous waste handlers with RCRA corrective action activity.

Date of Government Version: 03/15/2006 — Date of Last EDR Contact: 09/05/2006
Database Release Frequency: Quarterly — Date of Next Scheduled Update: 12/04/2006

PADS: PCB Activity Database System
Source: EPA
Telephone: 202-566-0500
PCB Activity Database. PADS Identifies generators, transporters, commercial storers and/or brokers and disposers of PCB's who are required to notify the EPA of such activities.

Date of Government Version: 07/07/2006 — Date of Last EDR Contact: 08/09/2006
Database Release Frequency: Annually — Date of Next Scheduled Update: 11/06/2006

MLTS: Material Licensing Tracking System
Source: Nuclear Regulatory Commission
Telephone: 301-415-7169
MLTS is maintained by the Nuclear Regulatory Commission and contains a list of approximately 8,100 sites which possess or use radioactive materials and which are subject to NRC licensing requirements. To maintain currency, EDR contacts the Agency on a quarterly basis.

Date of Government Version: 07/10/2006
Database Release Frequency: Quarterly
Date of Last EDR Contact: 07/03/2006
Date of Next Scheduled Update: 10/02/2006

PA AST: Listing of Pennsylvania Regulated Aboveground Storage Tanks
Source: Department of Environmental Protection
Telephone: 717-772-5599
Registered Aboveground Storage Tanks.

Date of Government Version: 06/01/2006
Database Release Frequency: Varies
Date of Last EDR Contact: 07/11/2006
Date of Next Scheduled Update: 10/09/2006

PA UST: Listing of Pennsylvania Regulated Underground Storage Tanks
Source: Department of Environmental Protection
Telephone: 717-772-5599
Registered Underground Storage Tanks. UST's are regulated under Subtitle I of the Resource Conservation and Recovery Act (RCRA) and must be registered with the state department responsible for administering the UST program. Available information varies by state program.

Date of Government Version: 06/01/2006
Database Release Frequency: Varies
Date of Last EDR Contact: 07/11/2006
Date of Next Scheduled Update: 10/09/2006

PA LUST: Storage Tank Release Sites
Source: Department of Environmental Protection
Telephone: 717-783-7509
Leaking Underground Storage Tank Incident Reports. LUST records contain an inventory of reported leaking underground storage tank incidents. Not all states maintain these records, and the information stored varies by state.

Date of Government Version: 06/14/2006
Database Release Frequency: Semi-Annually
Date of Last EDR Contact: 07/12/2006
Date of Next Scheduled Update: 10/09/2006

ERNS: Emergency Response Notification System
Source: National Response Center, United States Coast Guard
Telephone: 202-260-2342
Emergency Response Notification System. ERNS records and stores information on reported releases of oil and hazardous substances.

Date of Government Version: 12/31/2005
Database Release Frequency: Annually
Date of Last EDR Contact: 07/25/2006
Date of Next Scheduled Update: 10/23/2006

HMIRS: Hazardous Materials Information Reporting System
Source: U.S. Department of Transportation
Telephone: 202-366-4555
Hazardous Materials Incident Report System. HMIRS contains hazardous material spill incidents reported to DOT.

Date of Government Version: 07/03/2006
Database Release Frequency: Annually
Date of Last EDR Contact: 07/19/2006
Date of Next Scheduled Update: 10/16/2006

WASTE DISPOSAL

NPL: National Priority List
Source: EPA
Telephone: Not reported
National Priorities List (Superfund). The NPL is a subset of CERCLIS and identifies over 1,200 sites for priority cleanup under the Superfund Program. NPL sites may encompass relatively large areas. As such, EDR provides polygon coverage for over 1,000 NPL site boundaries produced by EPA's Environmental Photographic Interpretation Center (EPIC) and regional EPA offices.

Date of Government Version: 07/05/2006
Date Made Active at EDR: 09/12/2006
Database Release Frequency: Quarterly
Date of Data Arrival at EDR: 08/02/2006
Elapsed ASTM Days: 41
Date of Last EDR Contact: 08/02/2006

Proposed NPL: Proposed National Priority List Sites
Source: EPA
Telephone: Not reported

Date of Government Version: 07/05/2006
Date Made Active at EDR: 09/12/2006
Database Release Frequency: Quarterly
Date of Data Arrival at EDR: 08/02/2006
Elapsed ASTM Days: 41
Date of Last EDR Contact: 08/02/2006

DELISTED NPL: National Priority List Deletions
Source: EPA
Telephone: Not reported
The National Oil and Hazardous Substances Pollution Contingency Plan (NCP) establishes the criteria that the EPA uses to delete sites from the NPL. In accordance with 40 CFR 300.425.(e), sites may be deleted from the NPL where no further response is appropriate.

Date of Government Version: 07/05/2006
Date Made Active at EDR: 09/12/2006
Database Release Frequency: Quarterly
Date of Data Arrival at EDR: 08/02/2006
Elapsed ASTM Days: 41
Date of Last EDR Contact: 08/02/2006

CERCLIS: Comprehensive Environmental Response, Compensation, and Liability Information System
Source: EPA
Telephone: 703-413-0223
CERCLIS contains data on potentially hazardous waste sites that have been reported to the USEPA by states, municipalities, private companies and private persons, pursuant to Section 103 of the Comprehensive Environmental Response, Compensation, and Liability Act (CERCLA). CERCLIS contains sites which are either proposed to or on the National Priorities List (NPL) and sites which are in the screening and assessment phase for possible inclusion on the NPL.

Date of Government Version: 06/19/2006
Date Made Active at EDR: 08/23/2006
Database Release Frequency: Quarterly
Date of Data Arrival at EDR: 06/22/2006
Elapsed ASTM Days: 62
Date of Last EDR Contact: 09/21/2006

CERCLIS-NFRAP: CERCLIS No Further Remedial Action Planned
Source: EPA
Telephone: 703-413-0223
Archived sites are sites that have been removed and archived from the inventory of CERCLIS sites. Archived status indicates that, to the best of EPA's knowledge, assessment at a site has been completed and that EPA has determined no further steps will be taken to list this site on the National Priorities List (NPL), unless information indicates this decision was not appropriate or other considerations require a recommendation for listing at a later time. This decision does not necessarily mean that there is no hazard associated with a given site; it only means that, based upon available information, the location is not judged to be a potential NPL site.

Date of Government Version: 07/17/2006
Database Release Frequency: Quarterly
Date of Last EDR Contact: 09/18/2006
Date of Next Scheduled Update: 12/18/2006

ROD: Records Of Decision
Source: EPA
Telephone: 703-416-0223
Record of Decision. ROD documents mandate a permanent remedy at an NPL (Superfund) site containing technical and health information to aid in the cleanup.

Date of Government Version: 07/10/2006
Database Release Frequency: Annually
Date of Last EDR Contact: 07/06/2006
Date of Next Scheduled Update: 10/02/2006

NPL RECOVERY: Federal Superfund Liens
Source: EPA
Telephone: 202-564-4267
Federal Superfund Liens. Under the authority granted the USEPA by CERCLA of 1980, the USEPA has the authority to file liens against real property in order to recover remedial action expenditures or when the property owner received notification of potential liability. USEPA compiles a listing of filed notices of Superfund Liens.

Date of Government Version: 10/15/1991
Date Made Active at EDR: 03/30/1994
Database Release Frequency: No Update Planned
Date of Data Arrival at EDR: 02/02/1994
Elapsed ASTM Days: 56
Date of Last EDR Contact: 08/21/2006

PA SHWS: Hazardous Sites Cleanup Act Site List
Source: Department Environmental Protection
Telephone: 717-783-7816
The Hazardous Sites Cleanup Act Site List includes sites listed on PA Priority List, sites delisted from PA Priority List, Interim Response Completed sites, and Sites Being Studied or Response Being Planned.

Date of Government Version: 02/01/2006 | Date of Last EDR Contact: 08/18/2006
Database Release Frequency: Semi-Annually | Date of Next Scheduled Update: 11/13/2006

PA SWF/LF: Operating Facilities
Source: Department of Environmental Protection
Telephone: 717-787-7564

Date of Government Version: 03/15/2006 | Date of Last EDR Contact: 09/21/2006
Database Release Frequency: Semi-Annually | Date of Next Scheduled Update: 12/18/2006

MULTIMEDIA

TRIS: Toxic Chemical Release Inventory System
Source: EPA
Telephone: 202-566-0250
Toxic Release Inventory System. TRIS identifies facilities which release toxic chemicals to the air, water and land in reportable quantities under SARA Title III Section 313.

Date of Government Version: 12/31/2004 | Date of Last EDR Contact: 09/22/2006
Database Release Frequency: Annually | Date of Next Scheduled Update: 12/18/2006

SSTS: Section 7 Tracking Systems
Source: EPA
Telephone: 202-564-4203
Section 7 of the Federal Insecticide, Fungicide and Rodenticide Act, as amended (92 Stat. 829) requires all registered pesticide-producing establishments to submit a report to the Environmental Protection Agency by March 1st each year. Each establishment must report the types and amounts of pesticides, active ingredients and devices being produced, and those having been produced and sold or distributed in the past year.

Date of Government Version: 12/31/2004 | Date of Last EDR Contact: 07/17/2006
Database Release Frequency: Annually | Date of Next Scheduled Update: 10/16/2006

TSCA: Toxic Substances Control Act
Source: EPA
Telephone: 202-260-5521
Toxic Substances Control Act. TSCA identifies manufacturers and importers of chemical substances included on the TSCA Chemical Substance Inventory list. It includes data on the production volume of these substances by plant site.

Date of Government Version: 12/31/2002 | Date of Last EDR Contact: 07/17/2006
Database Release Frequency: N/A | Date of Next Scheduled Update: 10/16/2006

FTTS: FIFRA/ TSCA Tracking System - FIFRA (Federal Insecticide, Fungicide, & Rodenticide Act)/TSCA (Toxic Substances Control Act)
Source: EPA/Office of Prevention, Pesticides and Toxic Substances
Telephone: 202-566-1667
FTTS tracks administrative cases and pesticide enforcement actions and compliance activities related to FIFRA, TSCA and EPCRA (Emergency Planning and Community Right-to-Know Act). To maintain currency, EDR contacts the Agency on a quarterly basis.

Date of Government Version: 07/14/2006 | Date of Last EDR Contact: 09/18/2006
Database Release Frequency: Quarterly | Date of Next Scheduled Update: 12/18/2006

FTTS INSP: FIFRA/ TSCA Tracking System - FIFRA (Federal Insecticide, Fungicide, & Rodenticide Act)/TSCA (Toxic Substances Control Act)
Source: EPA
Telephone: 202-566-1667

Date of Government Version: 07/14/2006 | Date of Last EDR Contact: 09/18/2006
Database Release Frequency: Quarterly | Date of Next Scheduled Update: 12/18/2006

FINDS: Facility Index System/Facility Registry System
Source: EPA
Telephone: Not reported
Facility Index System. FINDS contains both facility information and 'pointers' to other sources that contain more detail. EDR includes the following FINDS databases in this report: PCS (Permit Compliance System), AIRS (Aerometric Information Retrieval System), DOCKET (Enforcement Docket used to manage and track information on civil judicial enforcement cases for all environmental statutes), FURS (Federal Underground Injection Control), C-DOCKET (Criminal Docket System used to track criminal enforcement actions for all environmental statutes), FFIS (Federal Facilities Information System), STATE (State Environmental Laws and Statutes), and PADS (PCB Activity Data System).

Date of Government Version: 07/21/2006 | Date of Last EDR Contact: 04/03/2006
Database Release Frequency: Quarterly | Date of Next Scheduled Update: 07/03/2006

RMP: Risk Management Plans
Source: Environmental Protection Agency
Telephone: 202-564-8600
When Congress passed the Clean Air Act Amendments of 1990, it required EPA to publish regulations and guidance for chemical accident prevention at facilities using extremely hazardous substances. The Risk Management Program Rule (RMP Rule) was written to implement Section 112(r) of these amendments. The rule, which built upon existing industry codes and standards, requires companies of all sizes that use certain flammable and toxic substances to develop a Risk Management Program, which includes a(n): Hazard assessment that details the potential effects of an accidental release, an accident history of the last five years, and an evaluation of worst-case and alternative accidental releases; Prevention program that includes safety precautions and maintenance, monitoring, and employee training measures; and Emergency response program that spells out emergency health care, employee training measures and procedures for informing the public and response agencies (e.g the fire department) should an accident occur.

Date of Government Version: 06/01/2006 | Date of Last EDR Contact: 08/21/2006
Database Release Frequency: Varies | Date of Next Scheduled Update: 11/20/2006

STORMWATER: Storm Water General Permits
Source: Environmental Protection Agency
Telephone: 202-564-0746
A listing of all facilities with Storm Water General Permits.

Date of Government Version: 06/02/2005 | Date of Last EDR Contact: 09/05/2006
Database Release Frequency: Quarterly | Date of Next Scheduled Update: 10/02/2006

US ENG CONTROLS: Engineering Controls Sites List
Source: Environmental Protection Agency
Telephone: 703-603-8905
A listing of sites with engineering controls in place. Engineering controls include various forms of caps, building foundations, liners, and treatment methods to create pathway elimination for regulated substances to enter environmental media or effect human health.

Date of Government Version: 03/21/2006 | Date of Last EDR Contact: 09/07/2006
Database Release Frequency: Varies | Date of Next Scheduled Update: 10/02/2006

US INST CONTROL: Sites with Institutional Controls
Source: Environmental Protection Agency
Telephone: 703-603-8905
A listing of sites with institutional controls in place. Institutional controls include administrative measures, such as groundwater use restrictions, construction restrictions, property use restrictions, and post remediation care requirements intended to prevent exposure to contaminants remaining on site. Deed restrictions are generally required as part of the institutional controls.

Date of Government Version: 03/21/2006 | Date of Last EDR Contact: 09/07/2006
Database Release Frequency: Varies | Date of Next Scheduled Update: 10/02/2006

INDIAN LUST R1: Leaking Underground Storage Tanks on Indian Land
Source: EPA Region 1
Telephone: 617-918-1313
A listing of leaking underground storage tank locations on Indian Land.

Date of Government Version: 06/08/2006 | Date of Last EDR Contact: 08/21/2006
Database Release Frequency: Varies | Date of Next Scheduled Update: 11/20/2006

PA HSCA: HSCA Remedial Sites Listing
Source: Department of Environmental Protection
Telephone: 717-783-7816
A list of remedial sites on the PA Priority List. This is the PA state equivalent of the federal NPL superfund list.

Date of Government Version: 05/05/2004
Database Release Frequency: Varies
Date of Last EDR Contact: 08/16/2006
Date of Next Scheduled Update: 11/13/2006

PA HIST LF: Abandoned Landfill Inventory
Source: Department of Environmental Protection
Telephone: 717-787-7564
The report provides facility information recorded in the Pennsylvania Department of Environmental Protection ALI database. Some of this information has been abstracted from old records and may not accurately reflect the current conditions and status at these facilities

Date of Government Version: 01/04/2005
Database Release Frequency: Varies
Date of Last EDR Contact: 09/18/2006
Date of Next Scheduled Update: 12/18/2006

PA UNREG LTANKS: Unregulated Tank Cases
Source: Department of Environmental Protection
Telephone: 717-783-7509
Leaking storage tank cases from unregulated storage tanks.

Date of Government Version: 04/12/2002
Database Release Frequency: No Update Planned
Date of Last EDR Contact: 08/14/2003
Date of Next Scheduled Update: Not reported

PA ARCHIVE UST: Archived Underground Storage Tank Sites
Source: Department of Environmental Protection
Telephone: 717-772-5599
The list includes tanks storing highly hazardous substances that were removed from the DEP's Storage Tank Information database because of the Department's policy on sensitive information. The list also may include tanks that are removed or permanently closed.

Date of Government Version: 06/01/2006
Database Release Frequency: Varies
Date of Last EDR Contact: 07/11/2006
Date of Next Scheduled Update: 10/09/2006

PA ARCHIVE AST: Archived Aboveground Storage Tank Sites
Source: Department of Environmental Protection
Telephone: 717-772-5599
The list includes aboveground tanks with a capacity greater than 21,000 gallons that were removed from the DEP's Storage Tank Information database because of the Department's policy on sensitive information. The list also may include tanks that are removed or permanently closed.

Date of Government Version: 06/01/2006
Database Release Frequency: Varies
Date of Last EDR Contact: 07/11/2006
Date of Next Scheduled Update: 10/09/2006

PA MANIFEST: Manifest Information
Source: Department of Environmental Protection
Telephone: Not reported
Hazardous waste manifest information.

Date of Government Version: 12/31/2005
Database Release Frequency: Annually
Date of Last EDR Contact: 09/11/2006
Date of Next Scheduled Update: 12/11/2006

PA ACT 2-DEED: Act 2-Deed Acknowledgment Sites
Source: Department of Environmental Protection
Telephone: 717-783-9470
This listing pertains to sites where the Department has approved a cleanup requiring a deed acknowledgment under Act 2. This list includes sites remediated to a non-residential Statewide health standard (Section 303(g)); all sites demonstrating attainment of a Site-specific standard (Section 304(m)); and sites being remediated as a special industrial area (Section 305(g)). Persons who remediated a site to a standard that requires a deed acknowledgment shall comply with the requirements of the Solid Waste Management Act or the Hazardous Sites Cleanup Act, as referenced in Act 2. These statutes require a property description section in the deed concerning the hazardous substance disposal on the site. The location of disposed hazardous substances and a description of the type of hazardous substances disposed on the site shall be included in the deed acknowledgment. A deed acknowledgment is required at the time of conveyance of the property.

Date of Government Version: 06/20/2006
Database Release Frequency: Varies
Date of Last EDR Contact: 09/11/2006
Date of Next Scheduled Update: 11/13/2006

PA ENG CONTROLS: Engineering Controls Site Listing
Source: Department of Environmental Protection
Telephone: 717-783-9470
Under the Land Recycling Act (Act 2) persons who perform a site cleanup using the site-specific standard or the special industrial area standard may use engineering or institutional controls as part of the response action. Engineering controls include various forms of caps, building foundations, liners, and treatment methods to create pathway elimination for regulated substances to enter environmental media or effect human health.

Date of Government Version: 03/08/2006
Database Release Frequency: Varies
Date of Last EDR Contact: 08/16/2006
Date of Next Scheduled Update: 11/13/2006

PA INST CONTROL: Institutional Controls Site Listing
Source: Department of Environmental Protection
Telephone: 717-783-9470
Under the Land Recycling Act (Act 2) persons who perform a site cleanup using the site-specific standard or the special industrial area standard may use engineering or institutional controls as part of the response action. Institutional controls include administrative measures, such as groundwater use restrictions, construction restrictions, property use restrictions, and post remediation care requirements intended to prevent exposure to contaminants remaining on site. Deed restrictions are generally required as part of the institutional controls.

Date of Government Version: 03/08/2006
Database Release Frequency: Varies
Date of Last EDR Contact: 08/16/2006
Date of Next Scheduled Update: 11/13/2006

PA VCP: Voluntary Cleanup Program Sites
Source: Department of Environmental Protection
Telephone: 717-783-2388
Sites involved in the Voluntary Cleanup Program

Date of Government Version: 06/20/2006
Database Release Frequency: Semi-Annually
Date of Last EDR Contact: 09/11/2006
Date of Next Scheduled Update: 11/13/2006

PA DRYCLEANERS: Drycleaner Facility Locations
Source: Department of Environmental Protection
Telephone: 717-787-9702
A listing of drycleaner facility locations.

Date of Government Version: 07/20/2006
Database Release Frequency: Varies
Date of Last EDR Contact: 07/17/2006
Date of Next Scheduled Update: 10/16/2006

PA BROWNFIELDS: Brownfields Sites
Source: Department of Environmental Protection
Telephone: 717-783-7509

Date of Government Version: 06/20/2006
Database Release Frequency: Varies
Date of Last EDR Contact: 09/11/2006
Date of Next Scheduled Update: 11/13/2006

PA AIRS: Permit and Emissions Inventory Data
Source: Department of Environmental Protection
Telephone: 717-787-9702
Permit and emissions inventory data.

Date of Government Version: 12/31/2004
Database Release Frequency: Annually
Date of Last EDR Contact: 07/24/2006
Date of Next Scheduled Update: 10/23/2006

POTENTIAL SUPERFUND LIABILITY

PRP: Potentially Responsible Parties
Source: EPA
Telephone: 202-564-6064
A listing of verified Potentially Responsible Parties

Date of Government Version: 07/20/2006
Database Release Frequency: Quarterly
Date of Last EDR Contact: 07/06/2006
Date of Next Scheduled Update: 10/02/2006